查询MC74LCX374供应商 捷多邦，专业PCB打样工厂，24小时加急出货

Low-Voltage CMOS Octal D-Type Flip-Flop

With 5V-Tolerant Inputs and Outputs (3-State, Non-Inverting)

The MC74LCX374 is a high performance, non–inverting octal D–type flip–flop operating from a 2.7 to 3.6V supply. High impedance TTL compatible inputs significantly reduce current loading to input drivers while TTL compatible outputs offer improved switching noise performance. A V_I specification of 5.5V allows MC74LCX374 inputs to be safely driven from 5V devices.

The MC74LCX374 consists of 8 edge–triggered flip–flops with individual D–type inputs and 3–state true outputs. The buffered clock and buffered Output Enable (OE) are common to all flip–flops. The eight flip–flops will store the state of individual D inputs that meet the setup and hold time requirements on the LOW–to–HIGH Clock (CP) transition. With the OE LOW, the contents of the eight flip–flops are available at the outputs. When the OE is HIGH, the outputs go to the high impedance state. The OE input level does not affect the operation of the flip–flops.

- Designed for 2.7 to 3.6V V_{CC} Operation
- 5V Tolerant — Interface Capability With 5V TTL Logic
- Supports Live Insertion and Withdrawal
- I_{OFF} Specification Guarantees High Impedance When V_{CC} = 0V
- LVTTL Compatible
- LVCMOS Compatible
- 24mA Balanced Output Sink and Source Capability
- Near Zero Static Supply Current in All Three Logic States (10µA) Substantially Reduces System Power Requirements
- Latchup Performance Exceeds 500mA
- ESD Performance: Human Body Model >2000V; Machine Model >200V

Pinout: 20–Lead (Top View)

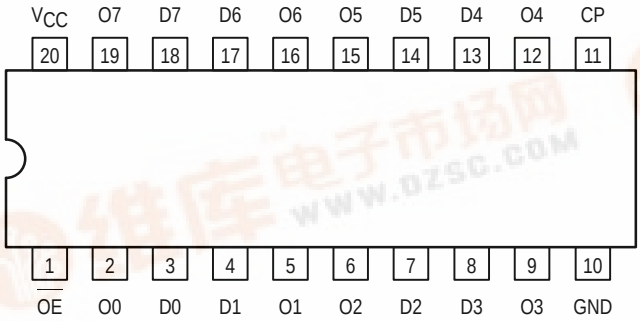

MC74LCX374

LCX

LOW–VOLTAGE CMOS OCTAL D–TYPE FLIP–FLOP

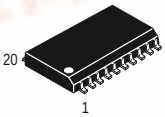

DW SUFFIX
PLASTIC SOIC
CASE 751D–04

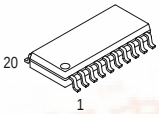

M SUFFIX
PLASTIC SOIC EIAJ
CASE 967–01

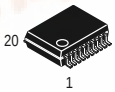

SD SUFFIX
PLASTIC SSOP
CASE 940C–03

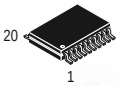

DT SUFFIX
PLASTIC TSSOP
CASE 948E–02

PIN NAMES

Pins	Function
$\overline{OE}$	Output Enable Input
CP	Clock Pulse Input
D0–D7	Data Inputs
O0–O7	3–State Outputs

找PDF 维库一下 pdf.dzsc.com

LOGIC DIAGRAM

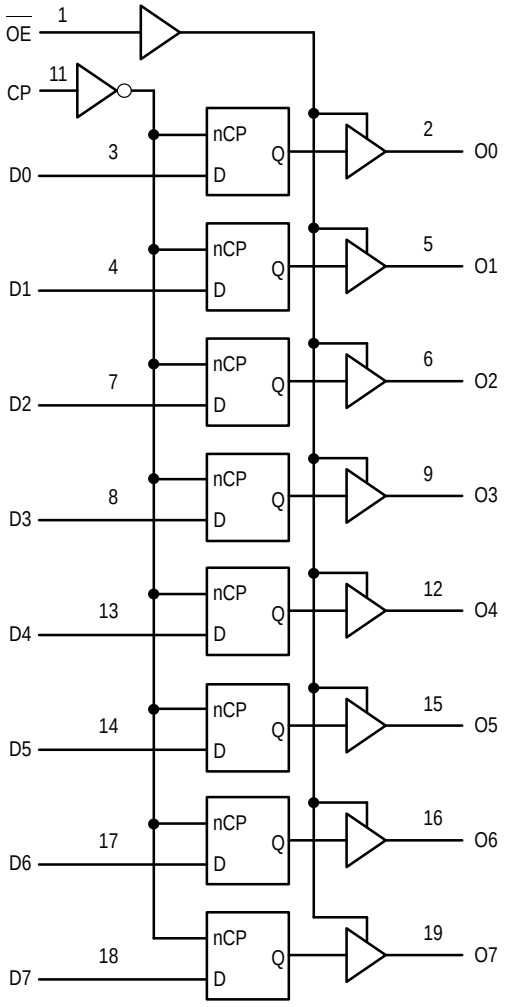

INPUTS			OUTPUTS	OPERATING MODE
OE	**CP**	**Dn**	**On**	
L L	↑ ↑	l h	L H	Load and Read Register
L	↑	X	NC	Hold and Read Register
H	↑	X	Z	Hold and Disable Outputs
H H	↑ ↑	l h	Z Z	Load Internal Register and Disable Outputs

H = High Voltage Level; h = High Voltage Level One Setup Time Prior to the Low–to–High Clock Transition; L = Low Voltage Level; l = Low Voltage Level One Setup Time Prior to the Low–to–High Clock Transition; NC = No Change, State Prior to Low–to–High Clock Transition; X = High or Low Voltage Level and Transitions are Acceptable; Z = High Impedance State; ↑ = Low–to–High Transition; ↑ = Not a Low–to–High Transition; For I_{CC} Reasons DO NOT FLOAT Inputs

ABSOLUTE MAXIMUM RATINGS*

Symbol	Parameter	Value	Condition	Unit
V_{CC}	DC Supply Voltage	–0.5 to +7.0		V
V_I	DC Input Voltage	$-0.5 \le V_I \le +7.0$		V
V_O	DC Output Voltage	$-0.5 \le V_O \le +7.0$	Output in 3–State	V
		$-0.5 \le V_O \le V_{CC} + 0.5$	Note 1.	V
I_{IK}	DC Input Diode Current	–50	V_I < GND	mA
I_{OK}	DC Output Diode Current	–50	V_O < GND	mA
		+50	$V_O > V_{CC}$	mA
I_O	DC Output Source/Sink Current	±50		mA
I_{CC}	DC Supply Current Per Supply Pin	±100		mA
I_{GND}	DC Ground Current Per Ground Pin	±100		mA
T_{STG}	Storage Temperature Range	–65 to +150		°C

* Absolute maximum continuous ratings are those values beyond which damage to the device may occur. Exposure to these conditions or conditions beyond those indicated may adversely affect device reliability. Functional operation under absolute–maximum–rated conditions is not implied.

1. Output in HIGH or LOW State. I_O absolute maximum rating must be observed.

RECOMMENDED OPERATING CONDITIONS

Symbol	Parameter	Min	Typ	Max	Unit
V_{CC}	Supply Voltage Operating Data Retention Only	2.0 1.5	3.3 3.3	3.6 3.6	V
V_I	Input Voltage	0		5.5	V
V_O	Output Voltage (HIGH or LOW State) (3–State)	0 0		V_{CC} 5.5	V
I_{OH}	HIGH Level Output Current, V_{CC} = 3.0V – 3.6V			–24	mA
I_{OL}	LOW Level Output Current, V_{CC} = 3.0V – 3.6V			24	mA
I_{OH}	HIGH Level Output Current, V_{CC} = 2.7V – 3.0V			–12	mA
I_{OL}	LOW Level Output Current, V_{CC} = 2.7V – 3.0V			12	mA
T_A	Operating Free–Air Temperature	–40		+85	°C
$\Delta t/\Delta V$	Input Transition Rise or Fall Rate, V_{IN} from 0.8V to 2.0V, V_{CC} = 3.0V	0		10	ns/V

DC ELECTRICAL CHARACTERISTICS

Symbol	Characteristic	Condition	T_A = –40°C to +85°C Min	Max	Unit
V_{IH}	HIGH Level Input Voltage (Note 2.)	$2.7V \le V_{CC} \le 3.6V$	2.0		V
V_{IL}	LOW Level Input Voltage (Note 2.)	$2.7V \le V_{CC} \le 3.6V$		0.8	V
V_{OH}	HIGH Level Output Voltage	$2.7V \le V_{CC} \le 3.6V$; I_{OH} = –100μA	V_{CC} – 0.2		V
		V_{CC} = 2.7V; I_{OH} = –12mA	2.2		
		V_{CC} = 3.0V; I_{OH} = –18mA	2.4		
		V_{CC} = 3.0V; I_{OH} = –24mA	2.2		
V_{OL}	LOW Level Output Voltage	$2.7V \le V_{CC} \le 3.6V$; I_{OL} = 100μA		0.2	V
		V_{CC} = 2.7V; I_{OL}= 12mA		0.4	
		V_{CC} = 3.0V; I_{OL} = 16mA		0.4	
		V_{CC} = 3.0V; I_{OL} = 24mA		0.55	

2. These values of V_I are used to test DC electrical characteristics only.

DC ELECTRICAL CHARACTERISTICS (continued)

Symbol	Characteristic	Condition	T_A = –40°C to +85°C Min	Max	Unit
I_I	Input Leakage Current	2.7V ≤ V_{CC} ≤ 3.6V; 0V ≤ V_I ≤ 5.5V		±5.0	µA
I_{OZ}	3–State Output Current	2.7 ≤ V_{CC} ≤ 3.6V; 0V ≤ V_O ≤ 5.5V; V_I = V_{IH} or V_{IL}		±5.0	µA
I_{OFF}	Power–Off Leakage Current	V_{CC} = 0V; V_I or V_O = 5.5V		10	µA
I_{CC}	Quiescent Supply Current	2.7 ≤ V_{CC} ≤ 3.6V; V_I = GND or V_{CC}		10	µA
		2.7 ≤ V_{CC} ≤ 3.6V; 3.6 ≤ V_I or V_O ≤ 5.5V		±10	µA
ΔI_{CC}	Increase in I_{CC} per Input	2.7 ≤ V_{CC} ≤ 3.6V; V_{IH} = V_{CC} – 0.6V		500	µA

AC CHARACTERISTICS (t_R = t_F = 2.5ns; C_L = 50pF; R_L = 500Ω)

Symbol	Parameter	Waveform	Limits, T_A = –40°C to +85°C, V_{CC} = 3.0V to 3.6V Min	Max	V_{CC} = 2.7V Min	Max	Unit
f_{max}	Clock Pulse Frequency	1	150				MHz
t_{PLH} t_{PHL}	Propagation Delay CP to O_n	1	1.5 1.5	8.5 8.5	1.5 1.5	9.5 9.5	ns
t_{PZH} t_{PZL}	Output Enable Time to HIGH and LOW Levels	2	1.5 1.5	8.5 8.5	1.5 1.5	9.5 9.5	ns
t_{PHZ} t_{PLZ}	Output Disable Time from HIGH and LOW Levels	2	1.5 1.5	7.5 7.5	1.5 1.5	8.5 8.5	ns
t_s	Setup TIme, HIGH or LOW D_n to CP	1	2.5		2.5		ns
t_h	Hold TIme, HIGH or LOW D_n to CP	1	1.5		1.5		ns
t_w	CP Pulse Width, HIGH or LOW	3	3.3		3.3		ns
t_{OSHL} t_{OSLH}	Output–to–Output Skew (Note 3.)			1.0 1.0			ns

3. Skew is defined as the absolute value of the difference between the actual propagation delay for any two separate outputs of the same device. The specification applies to any outputs switching in the same direction, either HIGH–to–LOW (t_{OSHL}) or LOW–to–HIGH (t_{OSLH}); parameter guaranteed by design.

DYNAMIC SWITCHING CHARACTERISTICS

Symbol	Characteristic	Condition	T_A = +25°C Min	Typ	Max	Unit
V_{OLP}	Dynamic LOW Peak Voltage (Note 4.)	V_{CC} = 3.3V, C_L = 50pF, V_{IH} = 3.3V, V_{IL} = 0V		0.8		V
V_{OLV}	Dynamic LOW Valley Voltage (Note 4.)	V_{CC} = 3.3V, C_L = 50pF, V_{IH} = 3.3V, V_{IL} = 0V		0.8		V

4. Number of outputs defined as “n”. Measured with “n–1” outputs switching from HIGH–to–LOW or LOW–to–HIGH. The remaining output is measured in the LOW state.

CAPACITIVE CHARACTERISTICS

Symbol	Parameter	Condition	Typical	Unit
C_{IN}	Input Capacitance	V_{CC} = 3.3V, V_I = 0V or V_{CC}	7	pF
C_{OUT}	Output Capacitance	V_{CC} = 3.3V, V_I = 0V or V_{CC}	8	pF
C_{PD}	Power Dissipation Capacitance	10MHz, V_{CC} = 3.3V, V_I = 0V or V_{CC}	25	pF

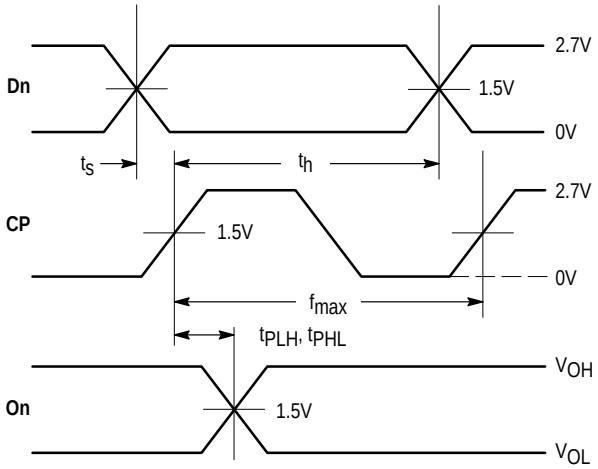

WAVEFORM 1 – PROPAGATION DELAYS, SETUP AND HOLD TIMES
$t_R = t_F$ = 2.5ns, 10% to 90%; f = 1MHz; t_W = 500ns

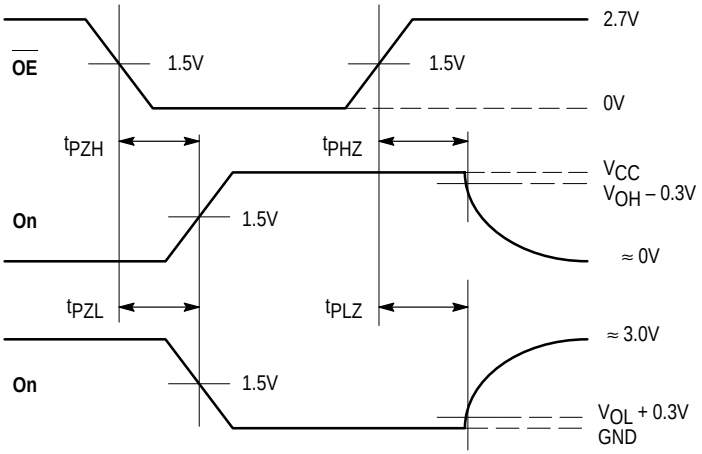

WAVEFORM 2 – OUTPUT ENABLE AND DISABLE TIMES
$t_R = t_F$ = 2.5ns, 10% to 90%; f = 1MHz; t_W = 500ns

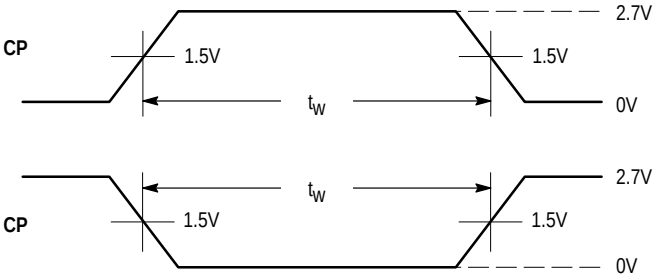

WAVEFORM 3 – PULSE WIDTH
$t_R = t_F$ = 2.5ns (or fast as required) from 10% to 90%;
Output requirements: $V_{OL} \leq 0.8V$, $V_{OH} \geq 2.0V$

Figure 1. AC Waveforms

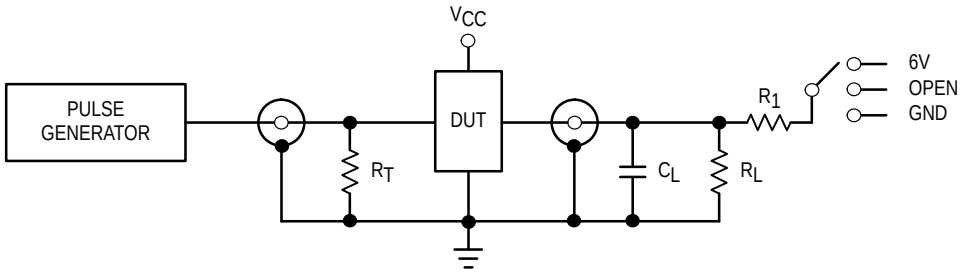

TEST	SWITCH
t_{PLH}, t_{PHL}	Open
t_{PZL}, t_{PLZ}	6V
Open Collector/Drain t_{PLH} and t_{PHL}	6V
t_{PZH}, t_{PHZ}	GND

C_L = 50pF or equivalent (Includes jig and probe capacitance)
$R_L = R_1$ = 500Ω or equivalent
$R_T = Z_{OUT}$ of pulse generator (typically 50Ω)

Figure 2. Test Circuit

OUTLINE DIMENSIONS

DW SUFFIX
PLASTIC SOIC PACKAGE
CASE 751D–04
ISSUE E

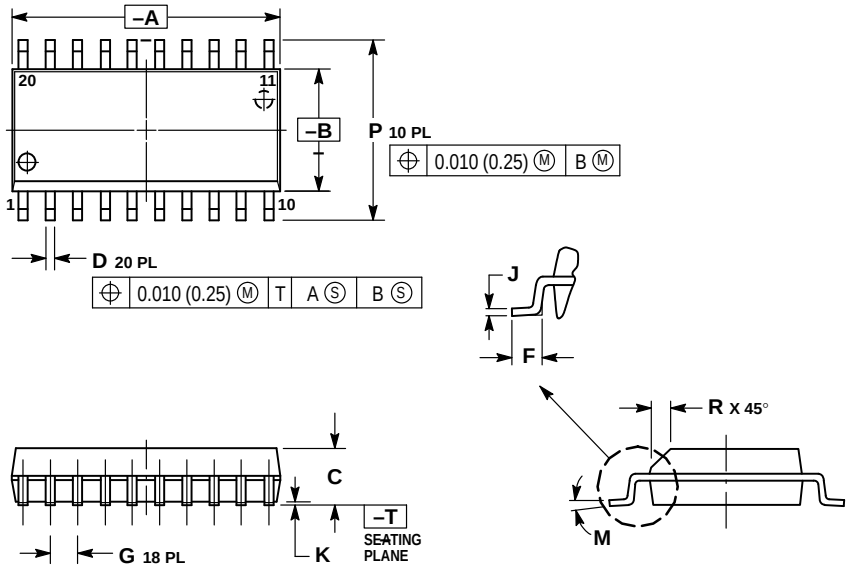

NOTES:
1. DIMENSIONING AND TOLERANCING PER ANSI Y14.5M, 1982.
2. CONTROLLING DIMENSION: MILLIMETER.
3. DIMENSIONS A AND B DO NOT INCLUDE MOLD PROTRUSION.
4. MAXIMUM MOLD PROTRUSION 0.150 (0.006) PER SIDE.
5. DIMENSION D DOES NOT INCLUDE DAMBAR PROTRUSION. ALLOWABLE DAMBAR PROTRUSION SHALL BE 0.13 (0.005) TOTAL IN EXCESS OF D DIMENSION AT MAXIMUM MATERIAL CONDITION.

	MILLIMETERS		INCHES	
DIM	MIN	MAX	MIN	MAX
A	12.65	12.95	0.499	0.510
B	7.40	7.60	0.292	0.299
C	2.35	2.65	0.093	0.104
D	0.35	0.49	0.014	0.019
F	0.50	0.90	0.020	0.035
G	1.27 BSC		0.050 BSC	
J	0.25	0.32	0.010	0.012
K	0.10	0.25	0.004	0.009
M	0°	7°	0°	7°
P	10.05	10.55	0.395	0.415
R	0.25	0.75	0.010	0.029

M SUFFIX
PLASTIC SOIC EIAJ PACKAGE
CASE 967–01
ISSUE O

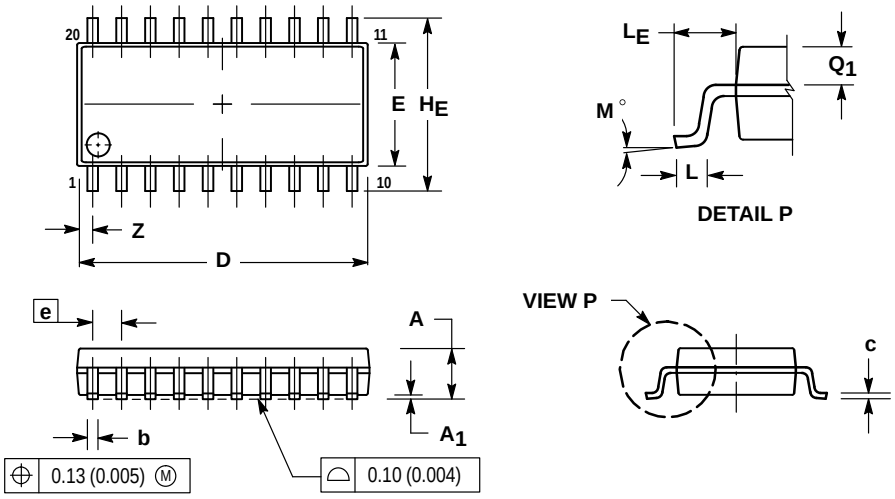

NOTES:
1 DIMENSIONING AND TOLERANCING PER ANSI Y14.5M, 1982.
2 CONTROLLING DIMENSION: MILLIMETER.
3 DIMENSIONS D AND E DO NOT INCLUDE MOLD FLASH OR PROTRUSIONS AND ARE MEASURED AT THE PARTING LINE. MOLD FLASH OR PROTRUSIONS SHALL NOT EXCEED 0.15 (0.006) PER SIDE.
4 TERMINAL NUMBERS ARE SHOWN FOR REFERENCE ONLY.
5 THE LEAD WIDTH DIMENSION (b) DOES NOT INCLUDE DAMBAR PROTRUSION. ALLOWABLE DAMBAR PROTRUSION SHALL BE 0.08 (0.003) TOTAL IN EXCESS OF THE LEAD WIDTH DIMENSION AT MAXIMUM MATERIAL CONDITION. DAMBAR CANNOT BE LOCATED ON THE LOWER RADIUS OR THE FOOT. MINIMUM SPACE BETWEEN PROTRUSIONS AND ADJACENT LEAD TO BE 0.46 (0.018).

	MILLIMETERS		INCHES	
DIM	MIN	MAX	MIN	MAX
A	---	2.05	---	0.081
A_1	0.05	0.20	0.002	0.008
b	0.35	0.50	0.014	0.020
c	0.18	0.27	0.007	0.011
D	12.35	12.80	0.486	0.504
E	5.10	5.45	0.201	0.215
e	1.27 BSC		0.050 BSC	
H_E	7.40	8.20	0.291	0.323
L	0.50	0.85	0.020	0.033
L_E	1.10	1.50	0.043	0.059
M	0 °	10 °	0 °	10 °
Q_1	0.70	0.90	0.028	0.035
Z	---	0.81	---	0.032

OUTLINE DIMENSIONS

SD SUFFIX
PLASTIC SSOP PACKAGE
CASE 940C–03
ISSUE B

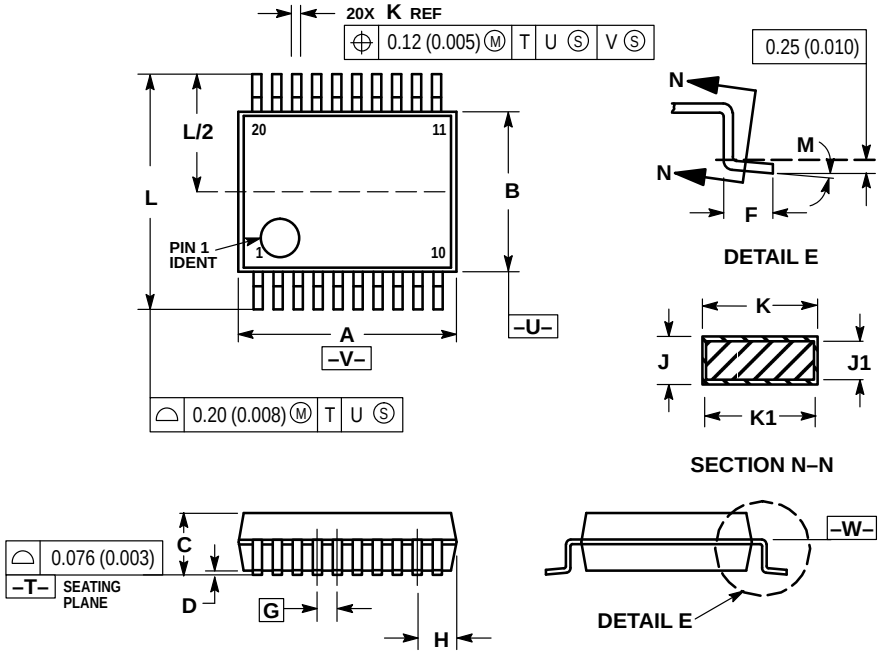

NOTES:
13 DIMENSIONING AND TOLERANCING PER ANSI Y14.5M, 1982.
14 CONTROLLING DIMENSION: MILLIMETER.
15 DIMENSION A DOES NOT INCLUDE MOLD FLASH, PROTRUSIONS OR GATE BURRS. MOLD FLASH OR GATE BURRS SHALL NOT EXCEED 0.15 (0.006) PER SIDE.
16 DIMENSION B DOES NOT INCLUDE INTERLEAD FLASH OR PROTRUSION. INTERLEAD FLASH OR PROTRUSION SHALL NOT EXCEED 0.15 (0.006) PER SIDE.
17 DIMENSION K DOES NOT INCLUDE DAMBAR PROTRUSION/INTRUSION. ALLOWABLE DAMBAR PROTRUSION SHALL BE 0.13 (0.005) TOTAL IN EXCESS OF K DIMENSION AT MAXIMUM MATERIAL CONDITION. DAMBAR INTRUSION SHALL NOT REDUCE DIMENSION K BY MORE THAN 0.07 (0.002) AT LEAST MATERIAL CONDITION.
18 TERMINAL NUMBERS ARE SHOWN FOR REFERENCE ONLY.
19 DIMENSION A AND B ARE TO BE DETERMINED AT DATUM PLANE –W–.

	MILLIMETERS		INCHES	
DIM	MIN	MAX	MIN	MAX
A	7.07	7.33	0.278	0.288
B	5.20	5.38	0.205	0.212
C	1.73	1.99	0.068	0.078
D	0.05	0.21	0.002	0.008
F	0.63	0.95	0.024	0.037
G	0.65 BSC		0.026 BSC	
H	0.59	0.75	0.023	0.030
J	0.09	0.20	0.003	0.008
J1	0.09	0.16	0.003	0.006
K	0.25	0.38	0.010	0.015
K1	0.25	0.33	0.010	0.013
L	7.65	7.90	0.301	0.311
M	0 °	8 °	0 °	8 °

DT SUFFIX
PLASTIC TSSOP PACKAGE
CASE 948E–02
ISSUE A

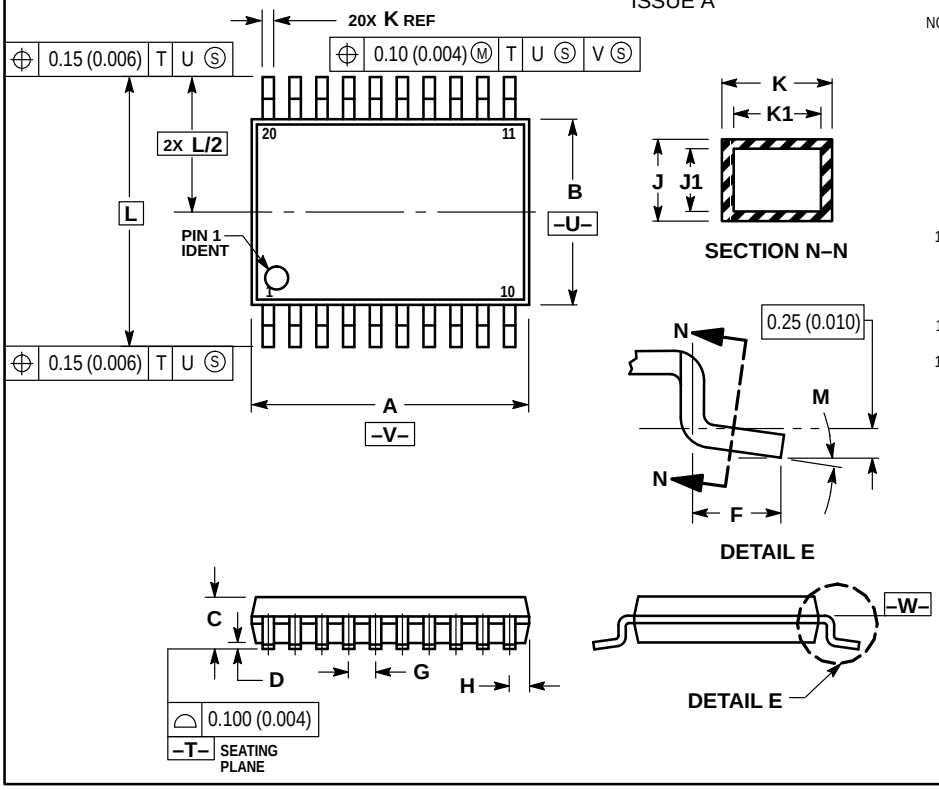

NOTES:
6 DIMENSIONING AND TOLERANCING PER ANSI Y14.5M, 1982.
7 CONTROLLING DIMENSION: MILLIMETER.
8 DIMENSION A DOES NOT INCLUDE MOLD FLASH, PROTRUSIONS OR GATE BURRS. MOLD FLASH OR GATE BURRS SHALL NOT EXCEED 0.15 (0.006) PER SIDE.
9 DIMENSION B DOES NOT INCLUDE INTERLEAD FLASH OR PROTRUSION. INTERLEAD FLASH OR PROTRUSION SHALL NOT EXCEED 0.25 (0.010) PER SIDE.
10 DIMENSION K DOES NOT INCLUDE DAMBAR PROTRUSION. ALLOWABLE DAMBAR PROTRUSION SHALL BE 0.08 (0.003) TOTAL IN EXCESS OF THE K DIMENSION AT MAXIMUM MATERIAL CONDITION.
11 TERMINAL NUMBERS ARE SHOWN FOR REFERENCE ONLY.
12 DIMENSION A AND B ARE TO BE DETERMINED AT DATUM PLANE –W–.

	MILLIMETERS		INCHES	
DIM	MIN	MAX	MIN	MAX
A	6.40	6.60	0.252	0.260
B	4.30	4.50	0.169	0.177
C	—	1.20	—	0.047
D	0.05	0.15	0.002	0.006
F	0.50	0.75	0.020	0.030
G	0.65 BSC		0.026 BSC	
H	0.27	0.37	0.011	0.015
J	0.09	0.20	0.004	0.008
J1	0.09	0.16	0.004	0.006
K	0.19	0.30	0.007	0.012
K1	0.19	0.25	0.007	0.010
L	6.40 BSC		0.252 BSC	
M	0°	8°	0°	8°

Motorola reserves the right to make changes without further notice to any products herein. Motorola makes no warranty, representation or guarantee regarding the suitability of its products for any particular purpose, nor does Motorola assume any liability arising out of the application or use of any product or circuit, and specifically disclaims any and all liability, including without limitation consequential or incidental damages. “Typical” parameters which may be provided in Motorola data sheets and/or specifications can and do vary in different applications and actual performance may vary over time. All operating parameters, including “Typicals” must be validated for each customer application by customer’s technical experts. Motorola does not convey any license under its patent rights nor the rights of others. Motorola products are not designed, intended, or authorized for use as components in systems intended for surgical implant into the body, or other applications intended to support or sustain life, or for any other application in which the failure of the Motorola product could create a situation where personal injury or death may occur. Should Buyer purchase or use Motorola products for any such unintended or unauthorized application, Buyer shall indemnify and hold Motorola and its officers, employees, subsidiaries, affiliates, and distributors harmless against all claims, costs, damages, and expenses, and reasonable attorney fees arising out of, directly or indirectly, any claim of personal injury or death associated with such unintended or unauthorized use, even if such claim alleges that Motorola was negligent regarding the design or manufacture of the part. Motorola and Ⓜ are registered trademarks of Motorola, Inc. Motorola, Inc. is an Equal Opportunity/Affirmative Action Employer.

How to reach us:

USA / EUROPE / Locations Not Listed: Motorola Literature Distribution; P.O. Box 5405; Denver, Colorado 80217. 1–800–441–2447

MFAX: RMFAX0@email.sps.mot.com – TOUCHTONE 602–244–6609
INTERNET: http://Design–NET.com

JAPAN: Nippon Motorola Ltd.; Tatsumi–SPD–JLDC, 6F Seibu–Butsuryu–Center, 3–14–2 Tatsumi Koto–Ku, Tokyo 135, Japan. 81–3–3521–8315

ASIA / PACIFIC: Motorola Semiconductors H.K. Ltd.; 8B Tai Ping Industrial Park, 51 Ting Kok Road, Tai Po, N.T., Hong Kong. 852–26629298