查询CXA1100供应商 捷多邦，专业PCB打样工厂，24小时加急出货

SONY

CXA1100P, CXA1101P/M, CXA1102P/M, CXA1163P/M

Dolby* B Type Noise Reduction System

Description

CXA1100, CXA1101, CXA1102 and CXA1163 are ICs including two separate Dolby B type noise reduction processors. Seven devices with four Dolby levels and two types of package are provided for various applications. These devices feature very few external components, which is achieved by integrated filter circuits using integrated thin film capacitors with high capacitance.

16 pin DIP (Plastic)

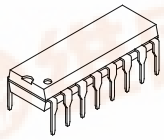

16 pin SOP (Plastic)

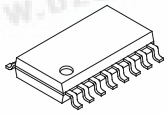

Features

- Minimum number of external components
- NR ON/OFF and REC/PB switchs included
- Small package (DIP16, SOP16)
- Small supply current (≃5.5mA, Typ.)
- Dual channel processors in one chip

Absolute Maximum Ratings (Ta = 25°C)

• Supply voltage	V_{CC}	17	V
• Operating temperature	Topr	–30 to +85	°C
• Storage temperature	Tstg	–55 to +150	°C
• Allowable power dissipation	P_D		
DIP16 (A1100P/A1101P/A1102P/A1163P)		900	mW
SOP16 (A1101M/A1102M/A1163M)		500	mW

Note 1) These ICs are available only to the licensees of Dolby Laboratories Licensing Corporation from whom licensing and application information may be obtaind.

Note 2) "Dolby" and double D symbols are trade marks of Dolby Laboratories Licensing Corporation.

Sony reserves the right to change products and specifications without prior notice. This information does not convey any license by any implication or otherwise under any patents or other right. Application circuits shown, if any, are typical examples illustrating the operation of the devices. Sony cannot assume responsibility for any problems arising out of the use of these circuits.

Pin Description (Ta = 25°C, V_{CC} = 12V (Single supply), No signal)

No.	Symbol	Z (in)	VDC	Equivalent Circuit	Description
1, 16	REC IN	40kΩ	6.0V	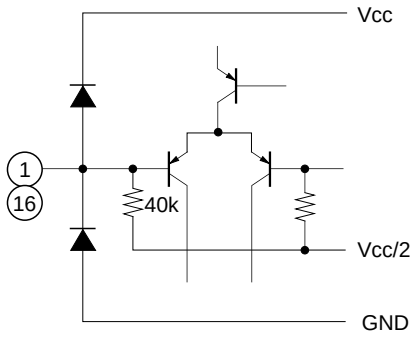	Recording (Encode) input
2	V_{CC}	—	12.0V		Power supply
3, 14	PB IN	40kΩ	6.0V	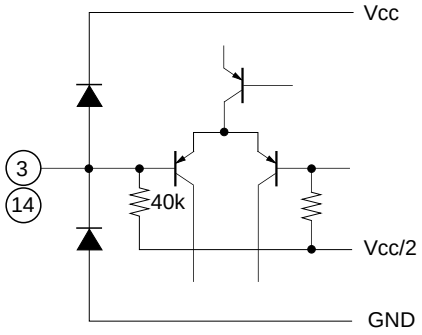	Playback (Decode) input
4	V_{CC}/2	1kΩ	6.0V		Single supply → V_{CC}/2 Split supply → Ground
5	ON/OFF	—	—	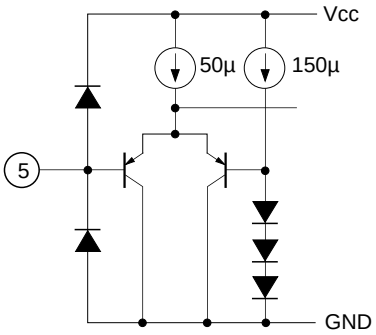	Mode control pin for NR ON/OFF "H" → NR OFF "L" → NR ON
6, 11	LINE OUT	—	6.0V	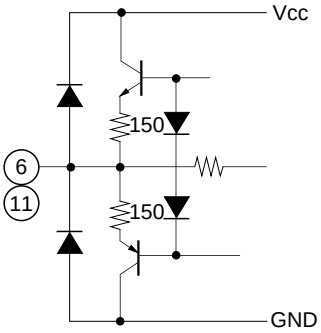	Line (Decode) output

No.	Symbol	Z (in)	VDC	Equivalent Circuit	Description
7, 10	TC	—	0.3V	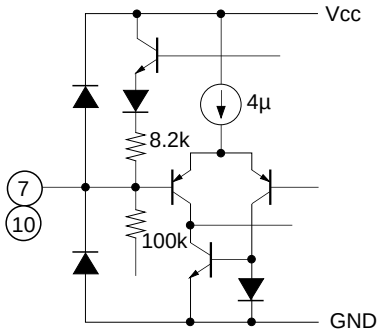	Time constant pin for the level detector
8, 9	REC OUT	—	6.0V	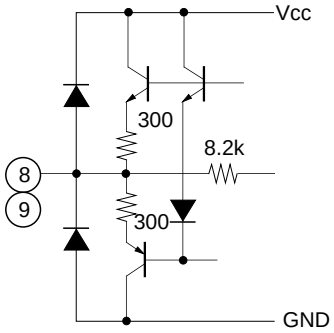	Recording (Encode) output
12	REC/PB	—	—	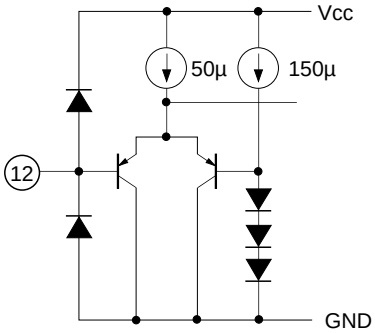	Mode control pin for REC/PB (Encode/Decode) "H" → B (Decode) "L → EC (Encode)
13	IREF	—	1.2V	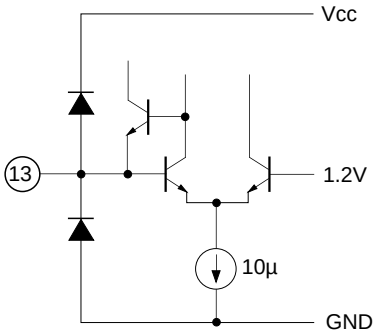	Reference current input pin for the active filters
15	GND	—	0V		Single supply → Ground Split supply → V_{EE}

Block Diagram

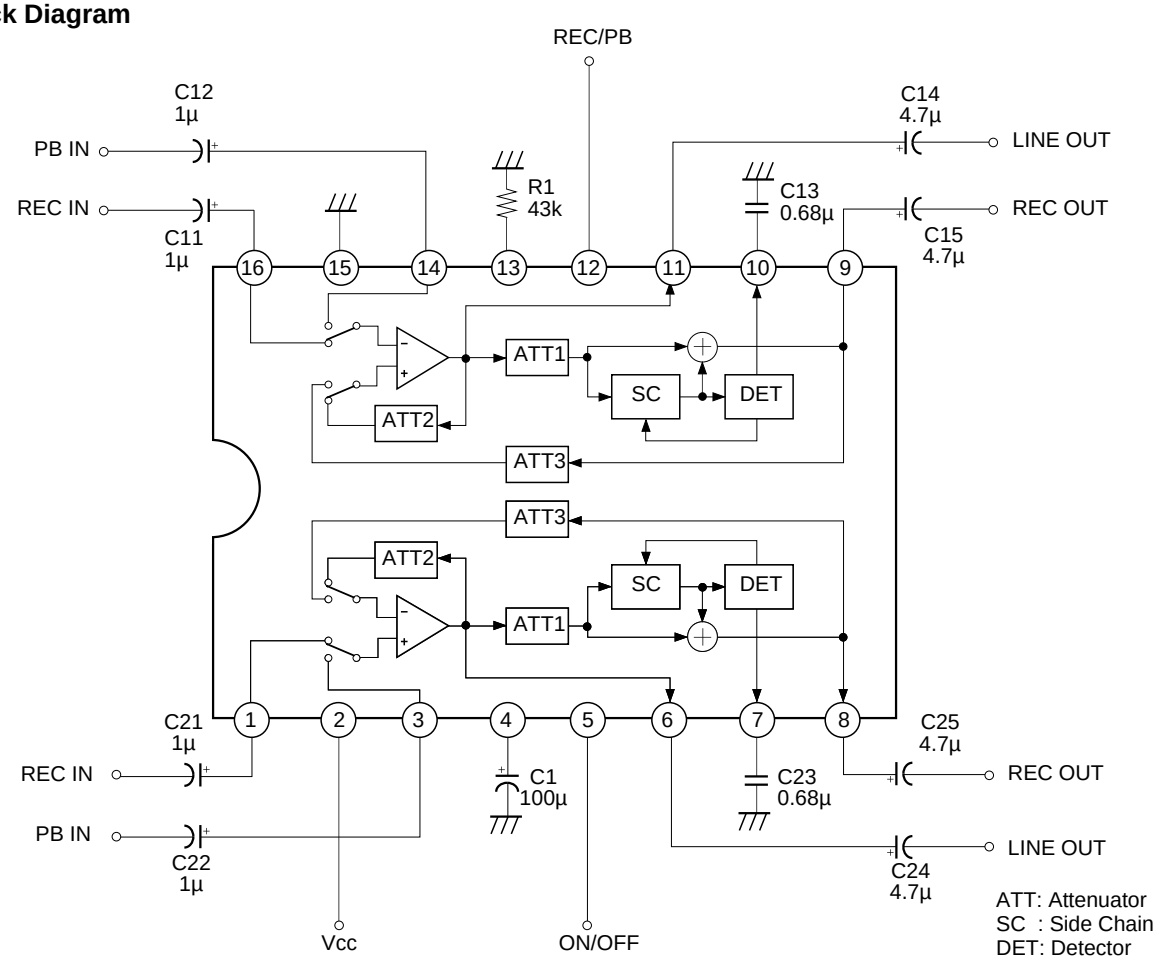

Test Circuit

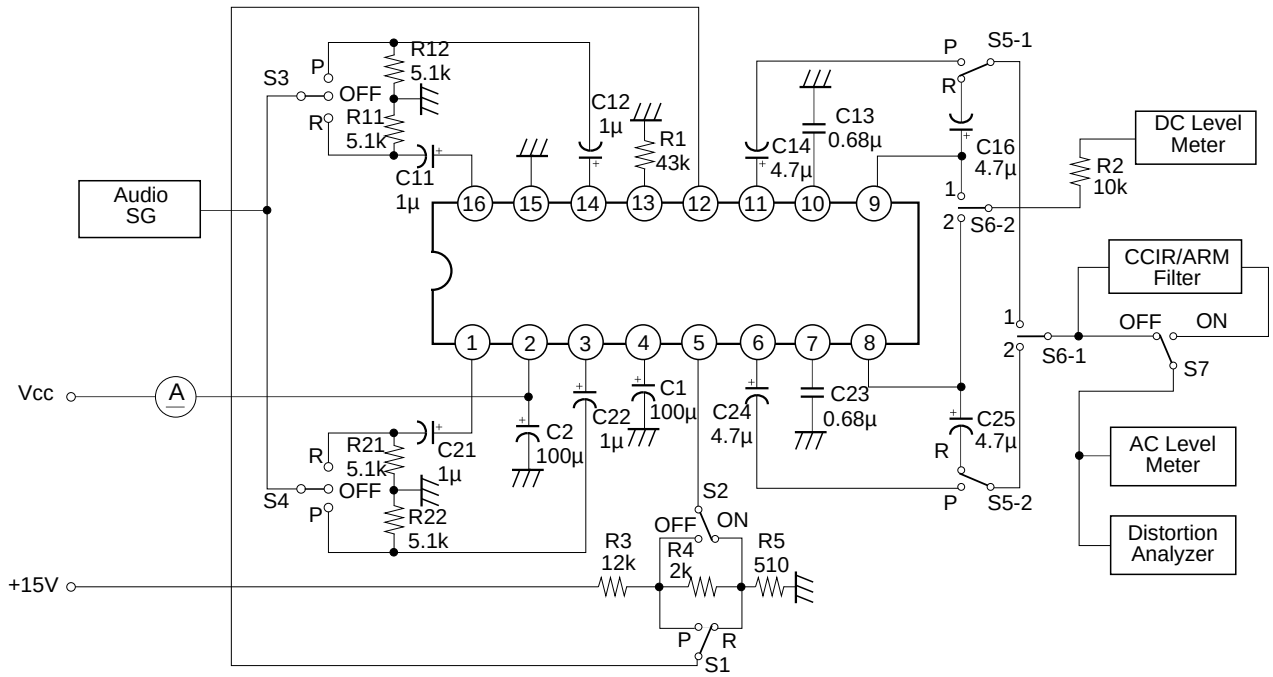

Electrical Characteristics

Ta = 25°C, Dolby Level: –10dBm (= 245mVrms) at REC OUT
V_{CC} = 15V (CXA1100), V_{CC} = 12V (CXA1101), V_{CC} = 9V (CXA1102)
V_{CC} = 6V (CXA1163)

Item	Symbol	Test Condition*				Min.	Typ.	Max.	Unit
		R/P	NR	f (Hz)	Other Conditions				
Operating voltage	Vopr	—	—	—	Signal Handling				
CXA1100					≥ 12dB	11.5	—	16.0	V
CXA1101						8.5	—	16.0	V
CXA1102						6.5	—	16.0	V
CXA1163						5.0	—	16.0	V
Supply current	I_{CC}	R	OFF	—	No signal				
CXA1100						3.5	5.6	7.5	mA
CXA1101						3.5	5.5	7.5	mA
CXA1102						3.5	5.3	7.5	mA
CXA1163						3.5	5.1	7.5	mA
LINE OUT level	Vlout	R	OFF	1k					
CXA1100						–1.0	0.0	1.0	dBm
CXA1101						–4.0	–3.0	–2.0	dBm
CXA1102						–7.0	–6.0	–5.0	dBm
CXA1163						–11.0	–10.0	–9.0	dBm
REC IN level	Vrin	R	OFF	1k		–32	–30	–28	dBm
PB IN level	Vpin	P	OFF	1k		–32	–30	–28	dBm
Encode characteristics (Boost)									
(1)	B-R-1	R	ON	500	–25dB	1.4	2.9	4.4	dB
(2)	B-R-2	R	ON	2k	–25dB	5.5	7.0	8.5	dB
(3)	B-R-3	R	ON	5k	–25dB	3.9	5.4	6.9	dB
(4)	B-R-4	R	ON	10k	–40dB	9.7	10.4	11.9	dB
(5)	B-R-5	R	ON	10k	0dB	–1.1	0.4	1.9	dB
Signal handling	Vomax	R	OFF	1k	THD = 1%				
CXA1100						13.5	15.3	—	dB
CXA1101						14.0	15.9	—	dB
CXA1102						14.0	15.9	—	dB
CXA1163						13.0	15.0	—	dB

0dBm = 0.775Vrms

Item	Symbol	Test Condition*				Min.	Typ.	Max.	Unit
		R/P	NR	f (Hz)	Other Conditions				
Total harmonic distortion									
1) NR OFF	THD	R	OFF	1k	+10dB				
CXA1100	(OFF)					—	0.03	0.2	%
CXA1101						—	0.04	0.2	%
CXA1102						—	0.05	0.2	%
CXA1163						—	0.06	0.2	%
2) NR ON	THD	R	ON	1k	+10dB				
CXA1100	(ON)					—	0.03	0.3	%
CXA1101						—	0.04	0.3	%
CXA1102						—	0.06	0.3	%
CXA1163						—	0.09	0.3	%
Input impedance									
REC IN	Zrec	—	—	1k		28	40	57	kΩ
PB IN	Zpb	—	—	1k		28	40	57	kΩ
Encode S/N ratio	SN (CCIR)	R	ON	—	Rg = 5kΩ (CCIR/ARM)	65	69	—	dB
Crosstalk									
REC-PB	CT-1	P	OFF	1k	0dB	—	–82	–65	dB
PB-REC	CT-2	R	OFF	1k	0dB	—	–81	–60	dB
REC ch to ch	CT-3	R	OFF	1k	0dB	—	–70	–60	dB
PB ch to ch	CT-4	P	OFF	1k	0dB	—	–70	–60	dB
REC OUT Offset voltage (NR ON — OFF)	Voff	R	ON	—		–40	0	40	mV
Control voltage									
"H" Level	VC-H	—	—	—		2.5	—	V_{CC}	V
"L" Level	VC-L	—	—	—		0	—	0.5	V

* 0dB means the level which provides the Dolby level at the recording output in the noise reduction off mode.

Example of Representative Characteristics

Quiescent Current vs. Supply Voltage

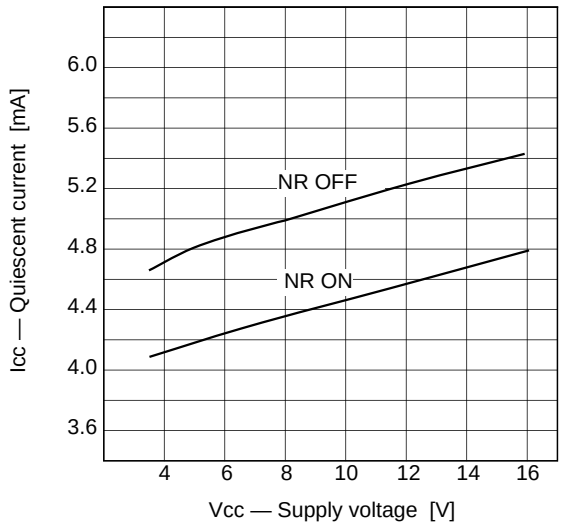

Supply Current vs. Input Voltage (CXA1101)

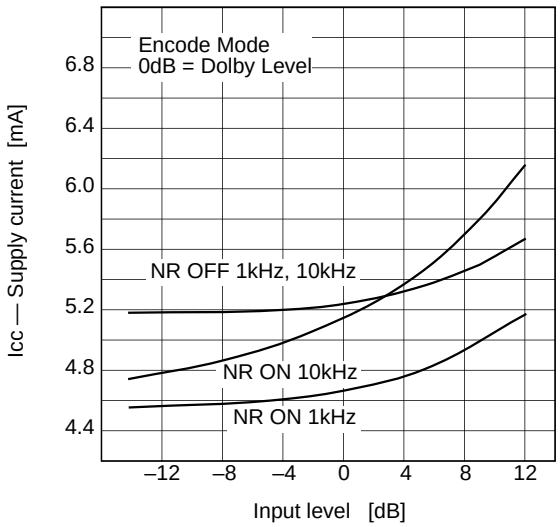

Encode Characteristics

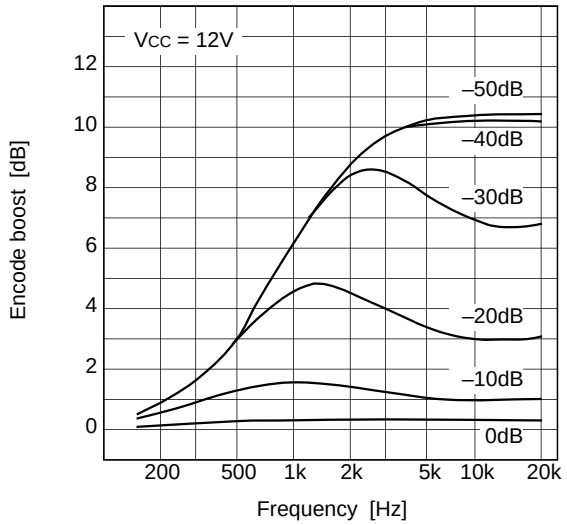

Temperature Characteristics

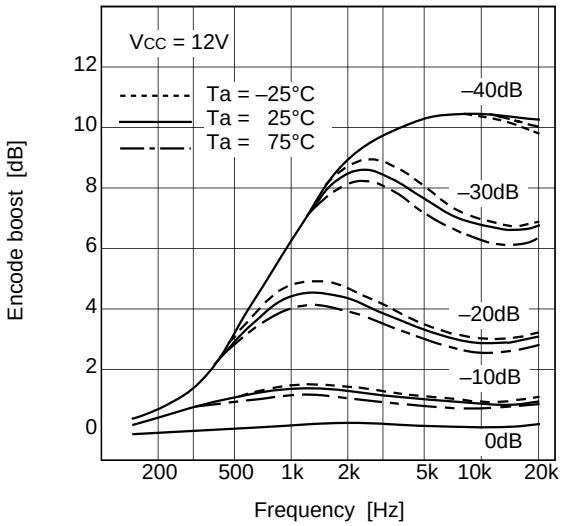

Signal Handling

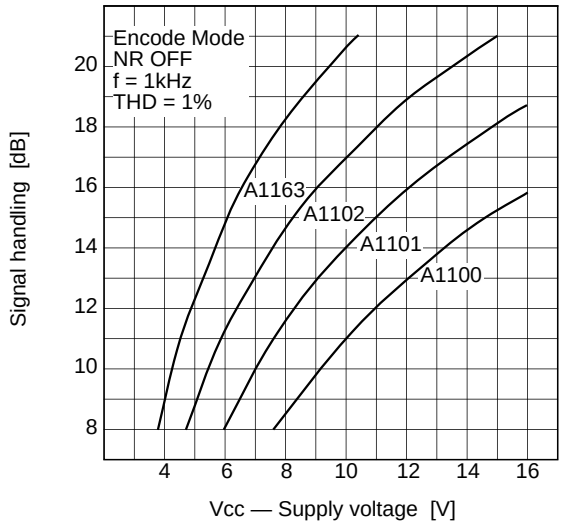

Load Characteristics (CXA1101)

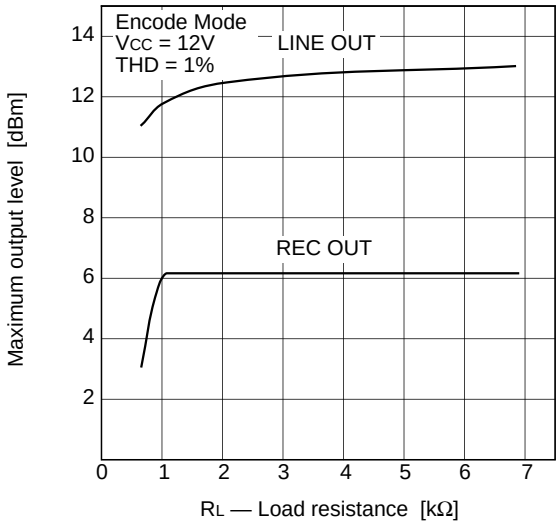

NR off Total Harrmonic Distortion-1 (CXA1101)

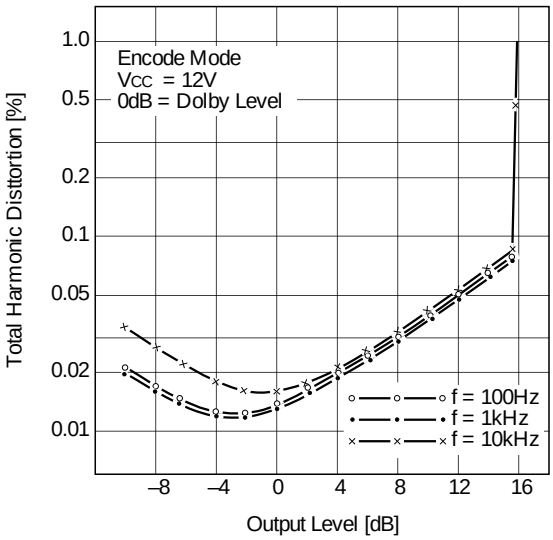

NR onTotal Harrmonic Distortion-1 (CXA1101)

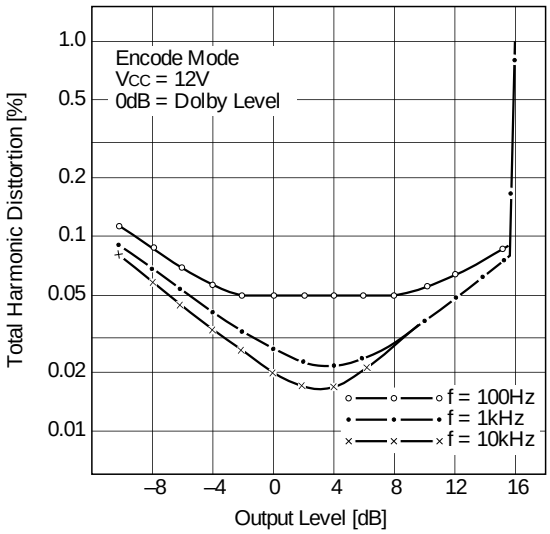

NR off Total Harrmonic Distortion-2 (CXA1100)

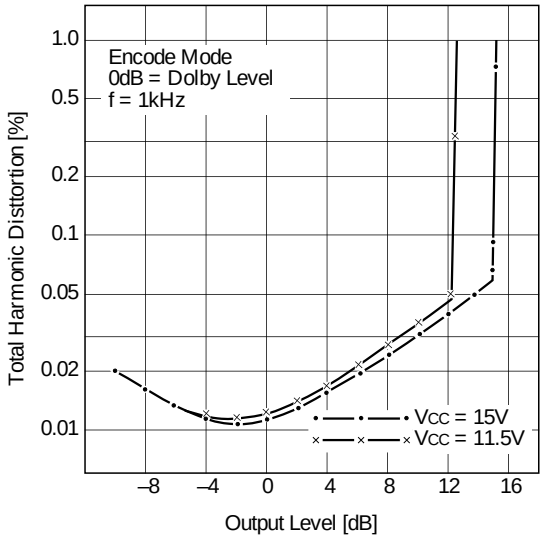

NR onTotal Harrmonic Distortion-2 (CXA1100)

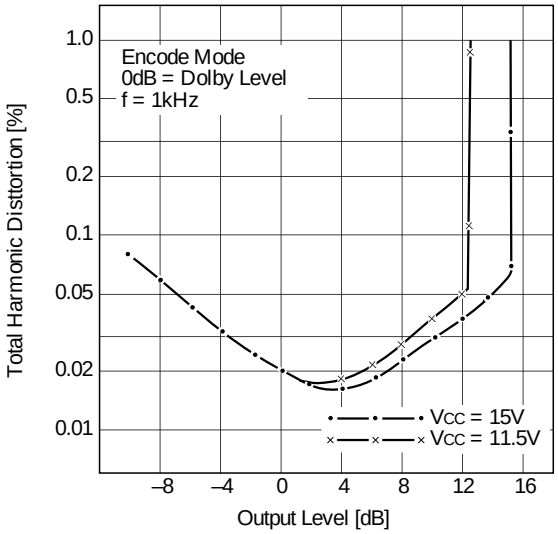

NR off Total Harrmonic Distortion-3 (CXA1101)

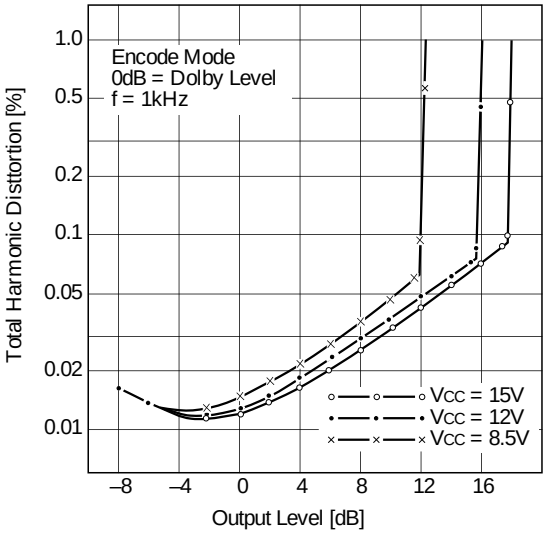

NR onTotal Harrmonic Distortion-3 (CXA1101)

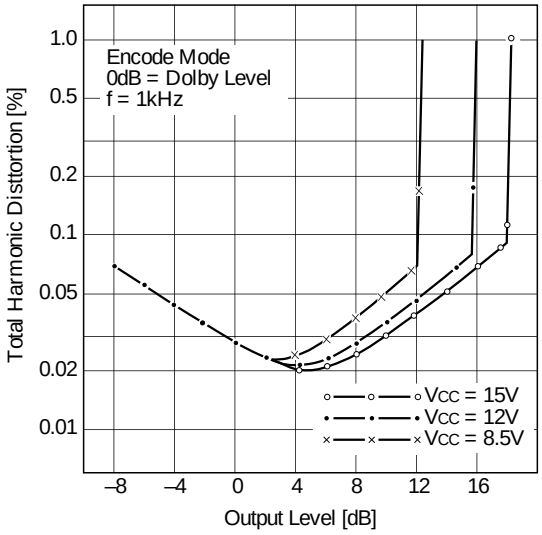

NR off Total Harmonic Distortion-4 (CXA1102)

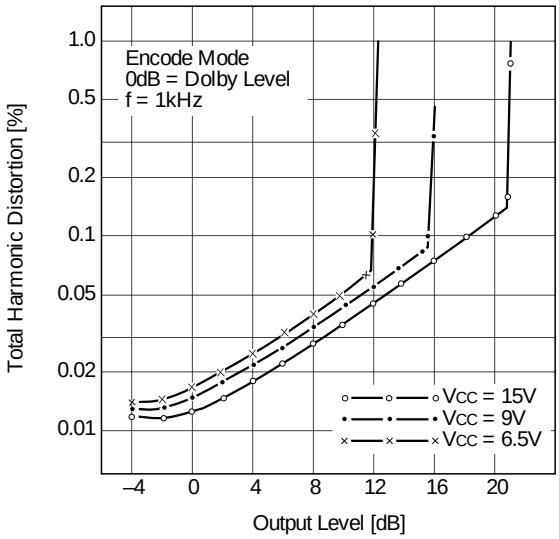

NR on Total Harmonic Distortion-4 (CXA1102)

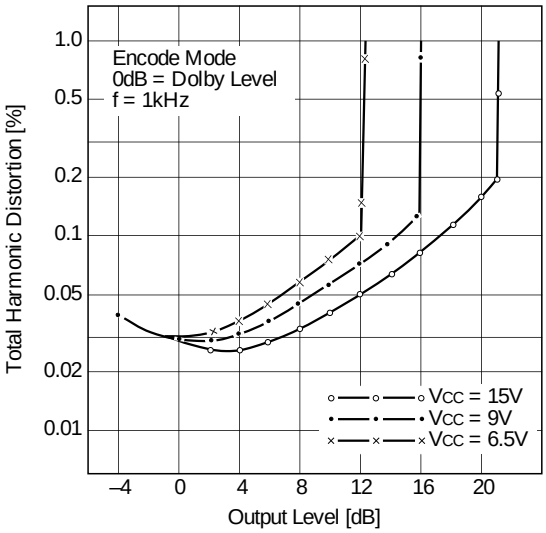

NR off Total Harmonic Distortion-5 (CXA1163)

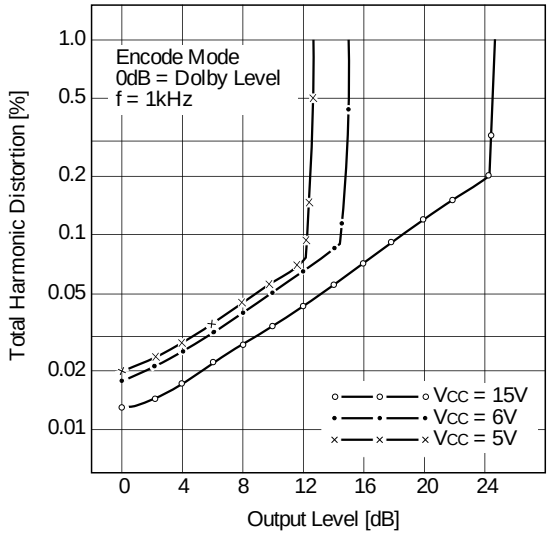

NR on Total Harmonic Distortion-5 (CXA1163)

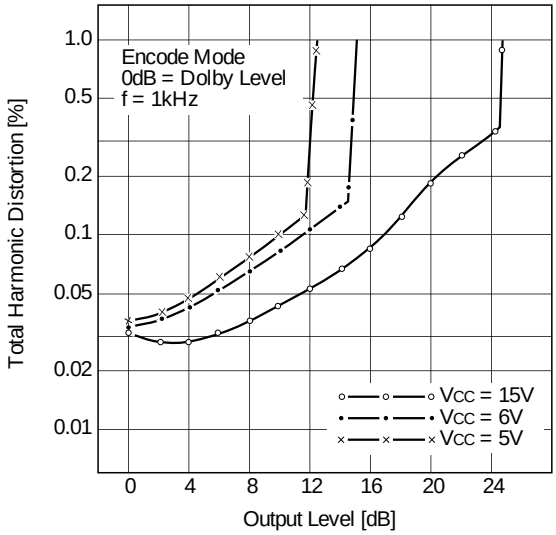

Channel to Channel Crosstalk (CXA1101)

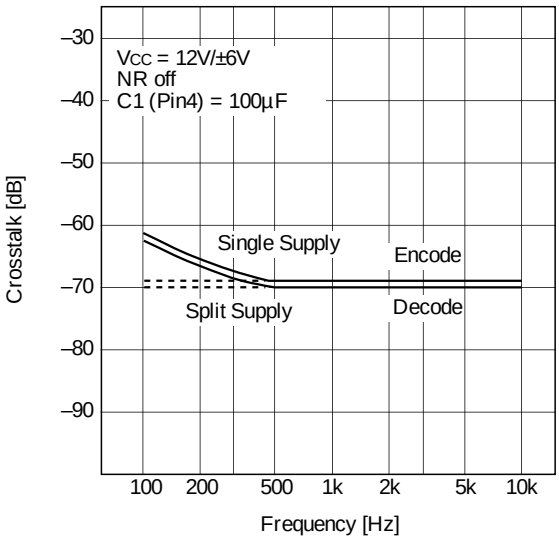

REC to PB and PB to REC Crosstalk (CXA1101)

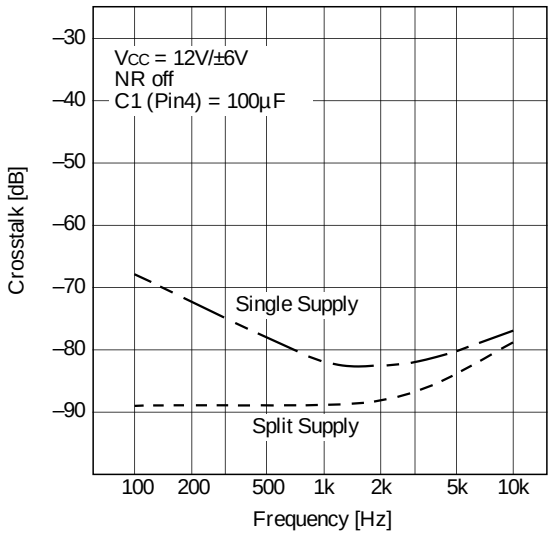

Ripple Rejection Ratio-1 (CXA1101)

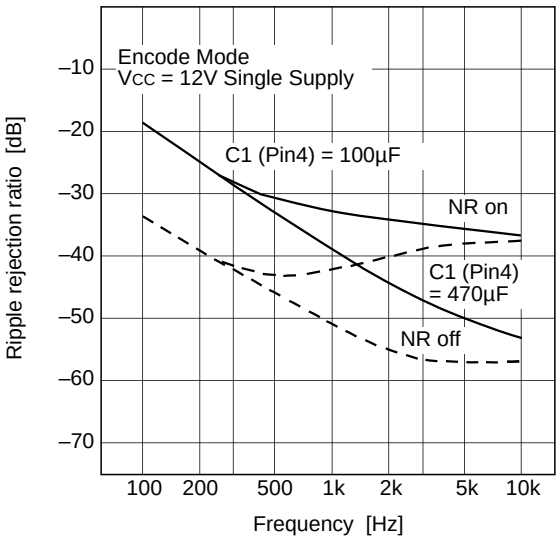

Ripple Rejection Ratio-2 (CXA1101)

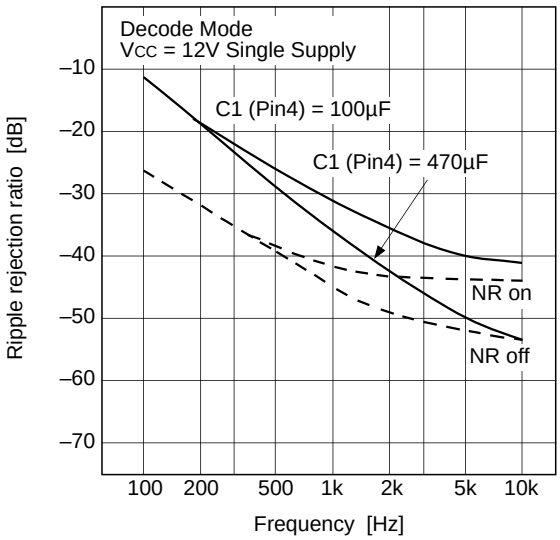

Ripple Rejection Ratio-3 (CXA1101)

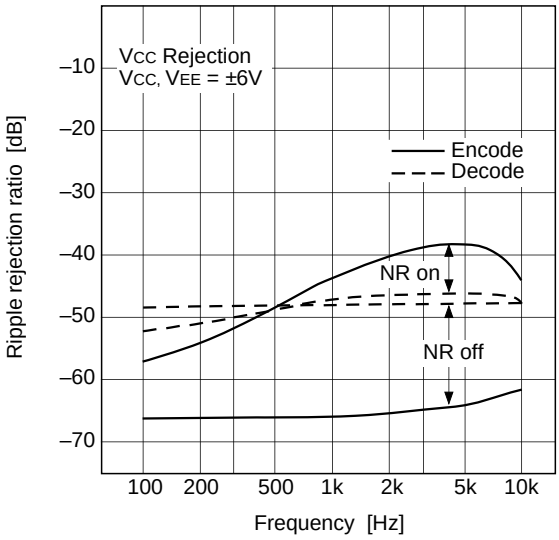

Ripple Rejection Ratio-4 (CXA1101)

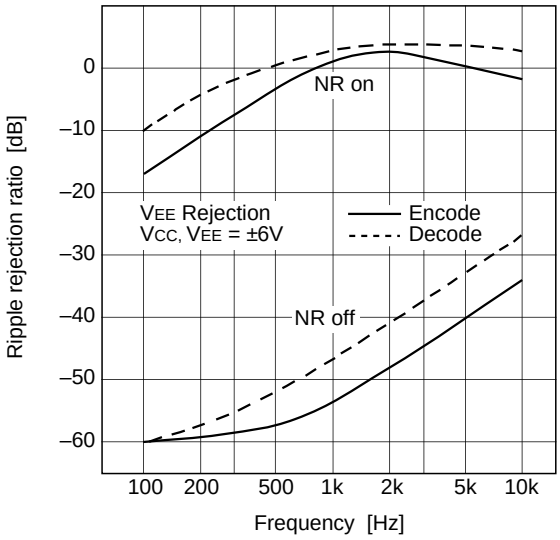

Notes on Applications

1) Power supply

The CXA1100 Series is basically designed to operate on single ended supply. The split supply operation is also possible, however, V_{EE} (negative) supply should provide low noise and ripple characteristics. The ripple rejection ratio of these devices is generally good for Vcc supply (single ended supply and split supply), however, that for V_{EE} supply is not so good in the NR on mode because the integrated capacitors for the side chain filter are connected to pin 15 (V_{EE} on split supply).

When the ripple or noise component of V_{EE} supply is not negligible small, the CR filter shown in Fig. a-1 will be usefull.

The operation voltage range are

CXA1100	11.5 to 16V	(±5.75 to ±8V)
CXA1101	8.5 to 16V	(±4.25 to ±8V)
CXA1102	6.5 to 16V	(±3.25 to ±8V)
CXA1163	5.0 to 16V	(±2.5 to ±8V)

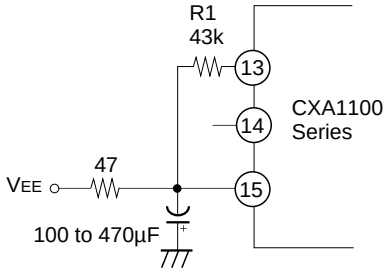

Fig. a-1.

The devices will satisfy the signal handling of 12dB specified by Dolby Laboratories on above voltage range.

2) Operation mode control

The CXA1100 series provide fully electronic switching circuits. The functions are controlled by DC voltages of the two control pins of REC/PB (pin 12) and ON/OFF (pin 5). The switching truth tables are shown in Fig. a-2.

V_H and V_L are defined as

(a) Single ended supply operation

$V_{CC} \geq V_H \geq 2.5V$

$0.5V \geq V_L \geq 0V$

(b) Split supply operation

$V_{CC} \geq V_H \geq V_{EE} + 2.5V$

$V_{EE} + 0.5V \geq V_L \geq V_{EE}$

REC/PB	V_H	V_L
Function	PB (Decode)	REC (Encode)

ON/OFF	V_H	V_L
Function	NR off	NR on

Fig. a-2.

It is desirable to provide CR time constant circuits at the mode control pins with time constant from 100msec to 1sec, which will reduce switching clicks effectively.

3) Reference levels

Characteristics and specifications of the Dolby noise reduction processor are defined as the levels and measured with reference to the Dolby level. This particular level in these devices is –10dBm (245mVrms), and is measured at the recording output (REC OUT) in the NR off mode.

The reference levels of the recording input (REC IN), play back input (PB IN) and line output (LINE OUT) are defined the levels which provide the Dolby level at the recording output in the NR off mode.

The CXA1100 series has a common silicon die, and has different internal connection. The series provides four different line output levels for various applications. Other reference levels, recording input level, playback input level and recording output level (= Dolby level) are identical in all devices.

The reference levels are as follows

Recording output level (= Dolby level)		–10dBm	(245mVrms)
Recording input level		–30dBm	(24.5mVrms)
Play back input level		–30dBm	(24.5mVrms)
Line output level	CXA1100	0dBm	(775mVrms)
	CXA1101	–3dBm	(548mVrms)
	CXA1102	–6dBm	(388mVrms)
	CXA1163	–10dBm	(245mVrms)

4) MPX filter termination and C_1 for Vcc/2 (Pin 4)

The MPX (multiplex) filter termination method shown in Fig. a-3 allows saving the coupling capacitors between the buffer amplifiers and MPX filters. However, the channel to channel separation and REC to PB crosstalk of low frequency signals will be degraded by the termination resistor RT. For example, 5kΩ of R_1 will degrade the channel to channel separation to 50dB. Better separation can be obtained by increasing the capacitance of C_1 (Pin 4) to 220µF or 470µF.

The allowable minimum value of C_1 is 47µF, and 100µF is the standard recommended value. Larger values of C_1 are generally desirable in order to improve the crosstalk and ripple rejection ratio.

5) Application for dubbing cassette decks

The CXA1100 series generates non decoded signal at the recoding output in the decode mode, and can simplify the structure of dubbing decks. See the SONY' Dolby B/C type IC (CX20187/CXA1097Q or CX20188/CXA1098Q) data sheet in detail.

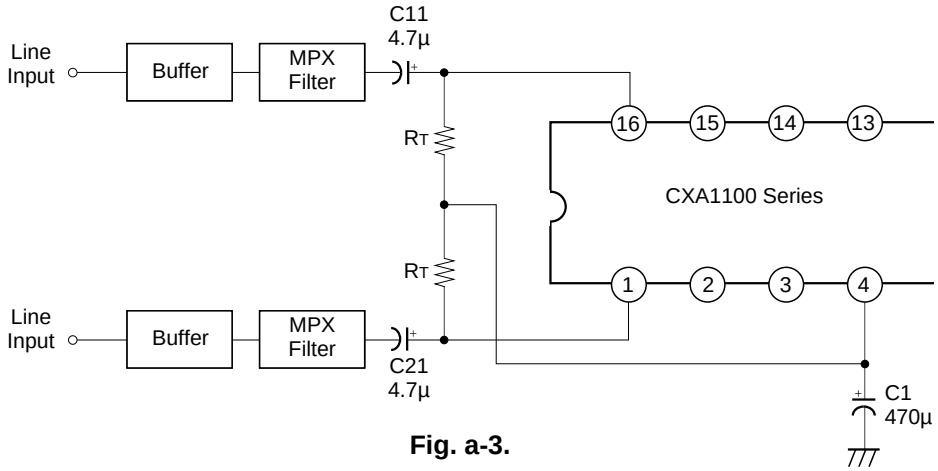

Fig. a-3.

Switchable Processor with Single Supply

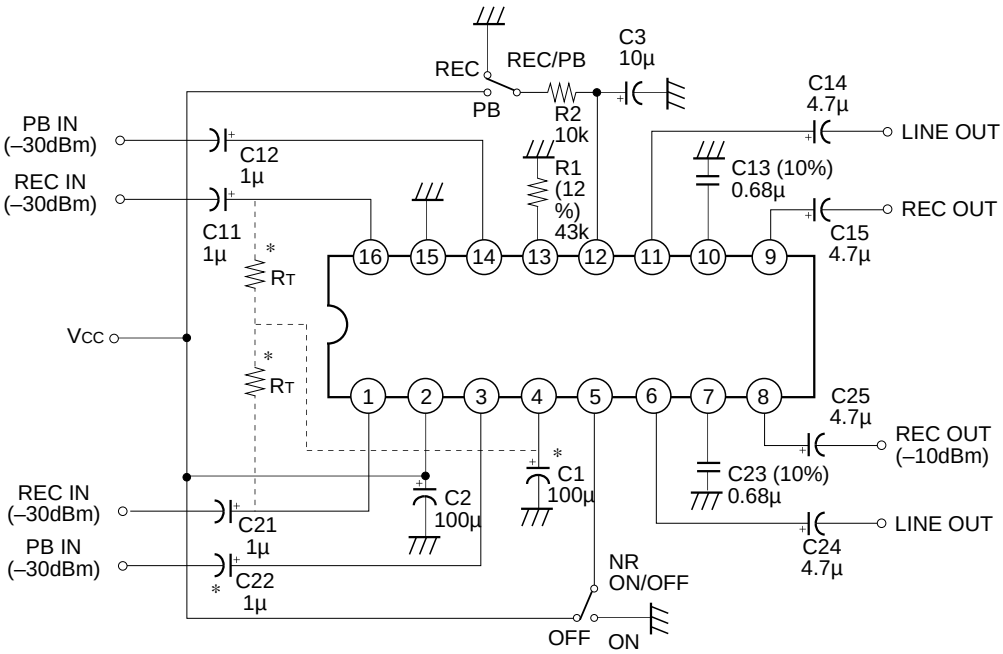

Note 1) Resistor and capacitor tolerances are ±10% and ±20% respectively unless otherwise specified.

Note 2) When resistors RT are connected to Pin 4 for the MPX filter termination, increase the capacitances of C_1 and C_{11} (C_{21}) to 470µF and 4.7µF respectively.

Switchable Processor with Split Supply

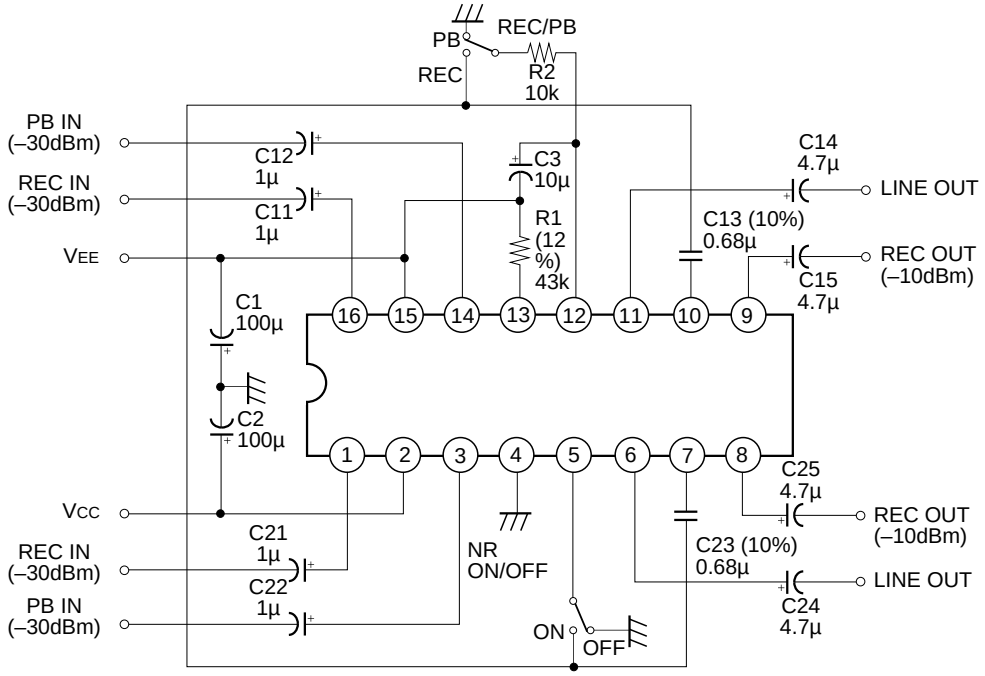

Note 1) Resistor and capacitor tolerances are ±10% and ±20% respectively unless otherwise specified.

Playback Processor with AUX input

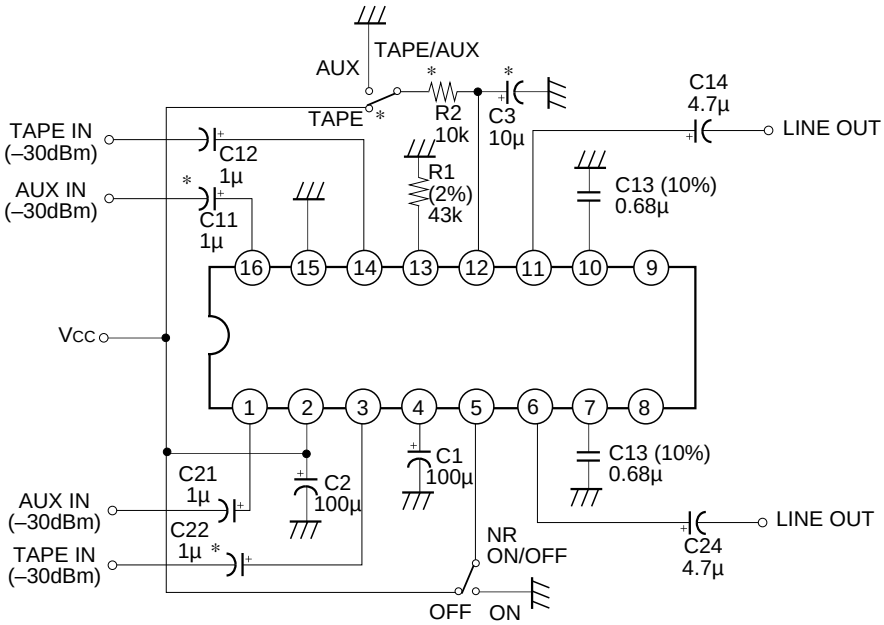

Note 1) Resistor and capacitor tolerances are ±10% and ±20% respectively unless otherwise specified.

Note 2) When AUX inputs are not necessary, reject R_2, C_3, C_{11}, C_{21} and TAPE/AUX switch, and connect Pin 12 to Vcc.

Package Outline Unit: mm

CXA1101P, CXA1101P
CXA1102P, CXA1163P

16PIN DIP (PLASTIC) 300mil

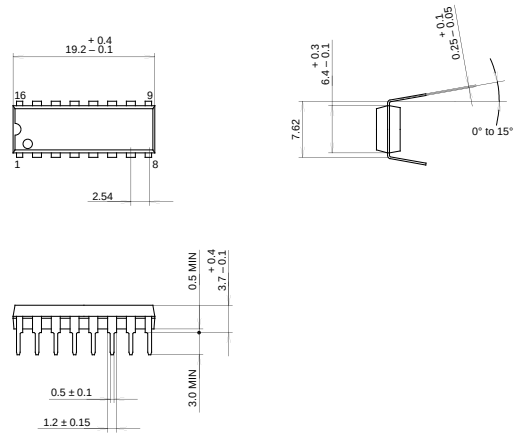

SONY CODE	DIP-16P-01
EIAJ CODE	*DIP016-P-0300-A
JEDEC CODE	Similar to MO-001-AE

PACKAGE STRUCTURE

PACKAGE MATERIAL	EPOXY RESIN
LEAD TREATMENT	SOLDER PLATING
LEAD MATERIAL	COPPER
PACKAGE WEIGHT	1.0 g

16PIN DIP (PLASTIC) 300mil

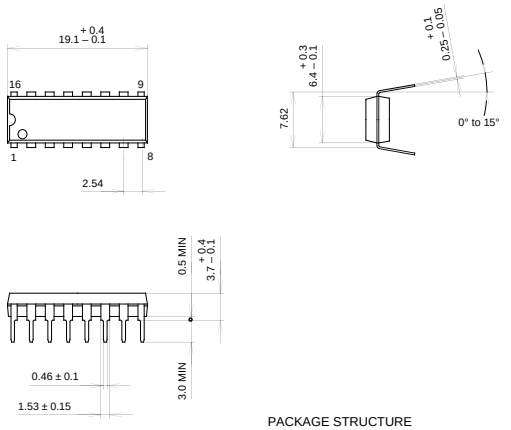

SONY CODE	DIP-16P-03
EIAJ CODE	*DIP016-P-0300-B
JEDEC CODE	Similar to MO-001-AE

PACKAGE STRUCTURE

PACKAGE MATERIAL	EPOXY RESIN
LEAD TREATMENT	SOLDER PLATING
LEAD MATERIAL	COPPER / 42 ALLOY
PACKAGE WEIGHT	1.0g

CXA1101M, CXA1102M
CXA1163M

16PIN SOP (PLASTIC) 300mil

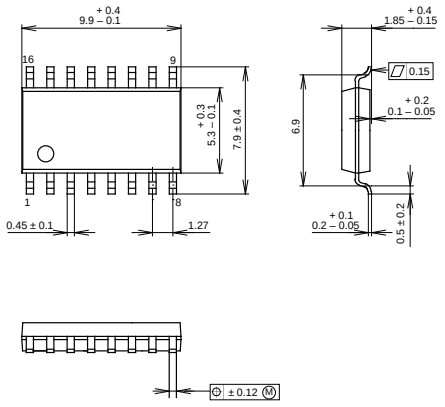

SONY CODE	SOP-16P-L01
EIAJ CODE	*SOP016-P-0300-A
JEDEC CODE	————————

PACKAGE STRUCTURE

PACKAGE MATERIAL	EPOXY RESIN
LEAD TREATMENT	SOLDER PLATING
LEAD MATERIAL	COPPER ALLOY
PACKAGE WEIGHT	0.2g

CXA1100P, CXA1101P
CXA1102P

16PIN DIP (PLASTIC) 300mil

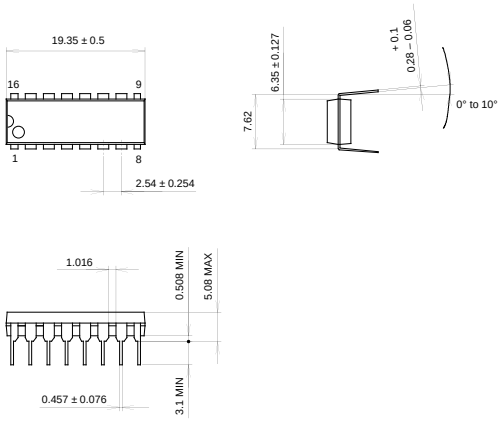

SONY CODE	DIP-16P-191
EIAJ CODE	DIP016-P-0300-AU
JEDEC CODE	MS-001-AA

PACKAGE STRUCTURE

PACKAGE MATERIAL	EPOXY RESIN
LEAD TREATMENT	SOLDER PLATING
LEAD MATERIAL	COPPER
PACKAGE WEIGHT	1.0g

CXA1100P, CXA1101P/M, CXA1102P/M, CXA1163P/M

16PIN SOP (PLASTIC) 300mil

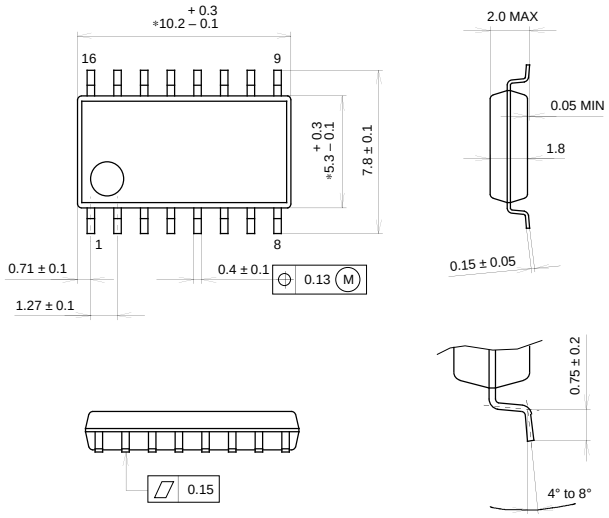

NOTE: Dimension "*" does not include mold protrusion.

SONY CODE	SOP-16P-L122
EIAJ CODE	SOP016-P-0300-BX
JEDEC CODE	————

PACKAGE STRUCTURE

PACKAGE MATERIAL	EPOXY RESIN
LEAD TREATMENT	SOLDER PLATING
LEAD MATERIAL	COPPER
PACKAGE WEIGHT	0.21g