SHINDENGEN

Schottky Rectifiers (SBD)

Dual

D10SD6M

60V 10A

FEATURES

- Tj150°C
- P_{RRSM} avalanche guaranteed
- Fully Isolated Molding

APPLICATION

- Switching power supply
- DC/DC converter
- Home Appliances, Office Equipment
- Telecommunication

OUTLINE DIMENSIONS

Case : ITO-220

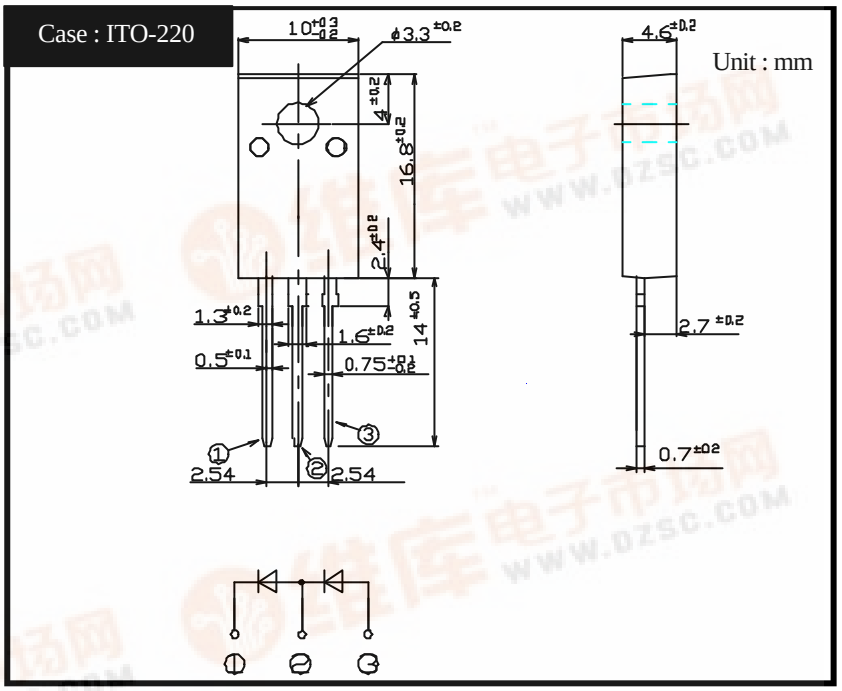

RATINGS

●Absolute Maximum Ratings (If not specified Tc=25°C)

Item	Symbol	Conditions	Ratings	Unit
Storage Temperature	Tstg		-40～150	°C
Operating Junction Temperature	Tj		150	°C
Maximum Reverse Voltage	V_{RM}		60	V
Repetitive Peak Surge Reverse Voltage	V_{RRSM}	Pulse width 0.5ms, duty 1/40	65	V
Average Rectified Forward Current	Io	50Hz sine wave, R-load, Rating for each diode Io/2, Tc=120°C	10	A
Peak Surge Forward Current	I_{FSM}	50Hz sine wave, Non-repetitive 1 cycle peak value, Tj=125°C	100	A
Repetitive Peak Surge Reverse Power	P_{RRSM}	Pulse width 10 μ s, Rating of per diode, Tj= 25°C	330	W
Dielectric Strength	Vdis	Terminals to case, AC 1 minute	1.5	kV
Mounting Torque	TOR	(Recommended torque 0.3N·m)	0.5	N·m

●Electrical Characteristics (If not specified Tc=25°C)

Item	Symbol	Conditions	Ratings	Unit
Forward Voltage	V_F	I_F=5A, Pulse measurement, Rating of per diode	Max.0.58	V
Reverse Current	I_R	V_R=V_{RM}, Pulse measurement, Rating of per diode	Max.4.5	mA
Junction Capacitance	Cj	f=1MHz, V_R=10V, Rating of per diode	Typ.200	pF
Thermal Resistance	θ jc	junction to case	Max.3.3	°C/W
	θ cf	case to heatsink, Mounting torque=0.5N·m	Max.1.5	

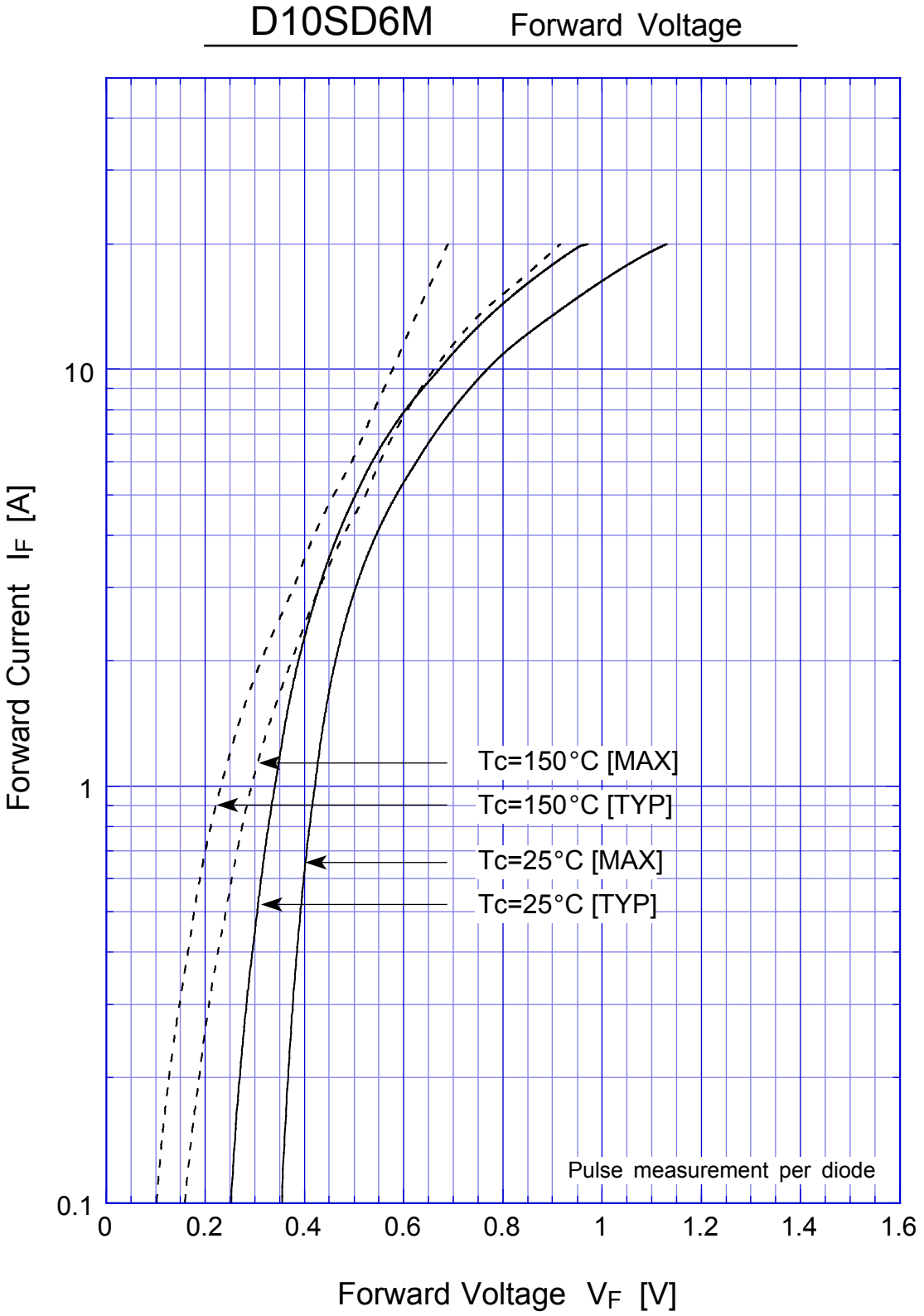
D10SD6M
Forward Voltage
Forward Current I_F [A]
10
1
0.1
0
0.2
0.4
0.6
0.8
1
1.2
1.4
1.6
Forward Voltage V_F [V]
Tc=150°C [MAX]
Tc=150°C [TYP]
Tc=25°C [MAX]
Tc=25°C [TYP]
Pulse measurement per diode

D10SD6M Junction Capacitance

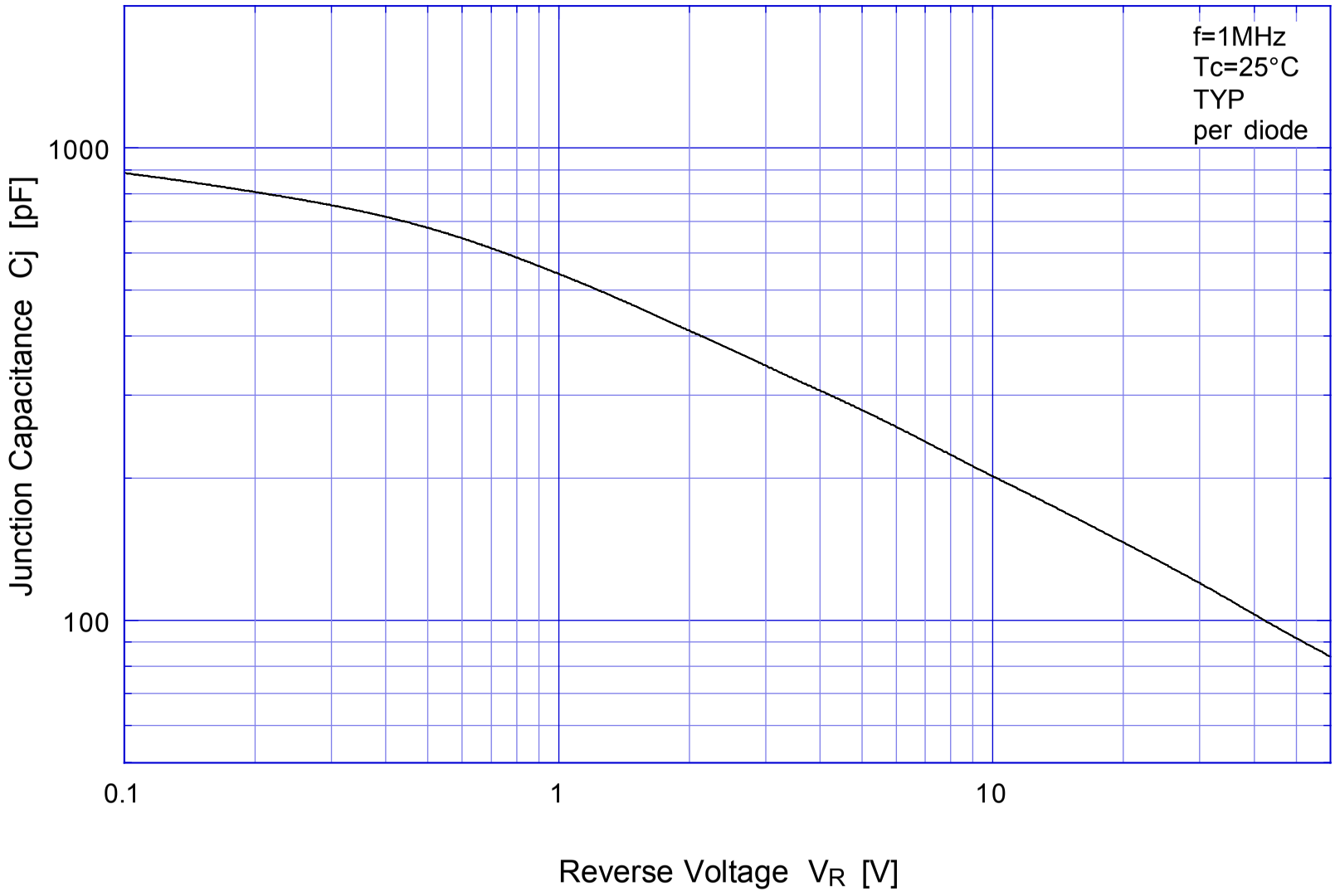

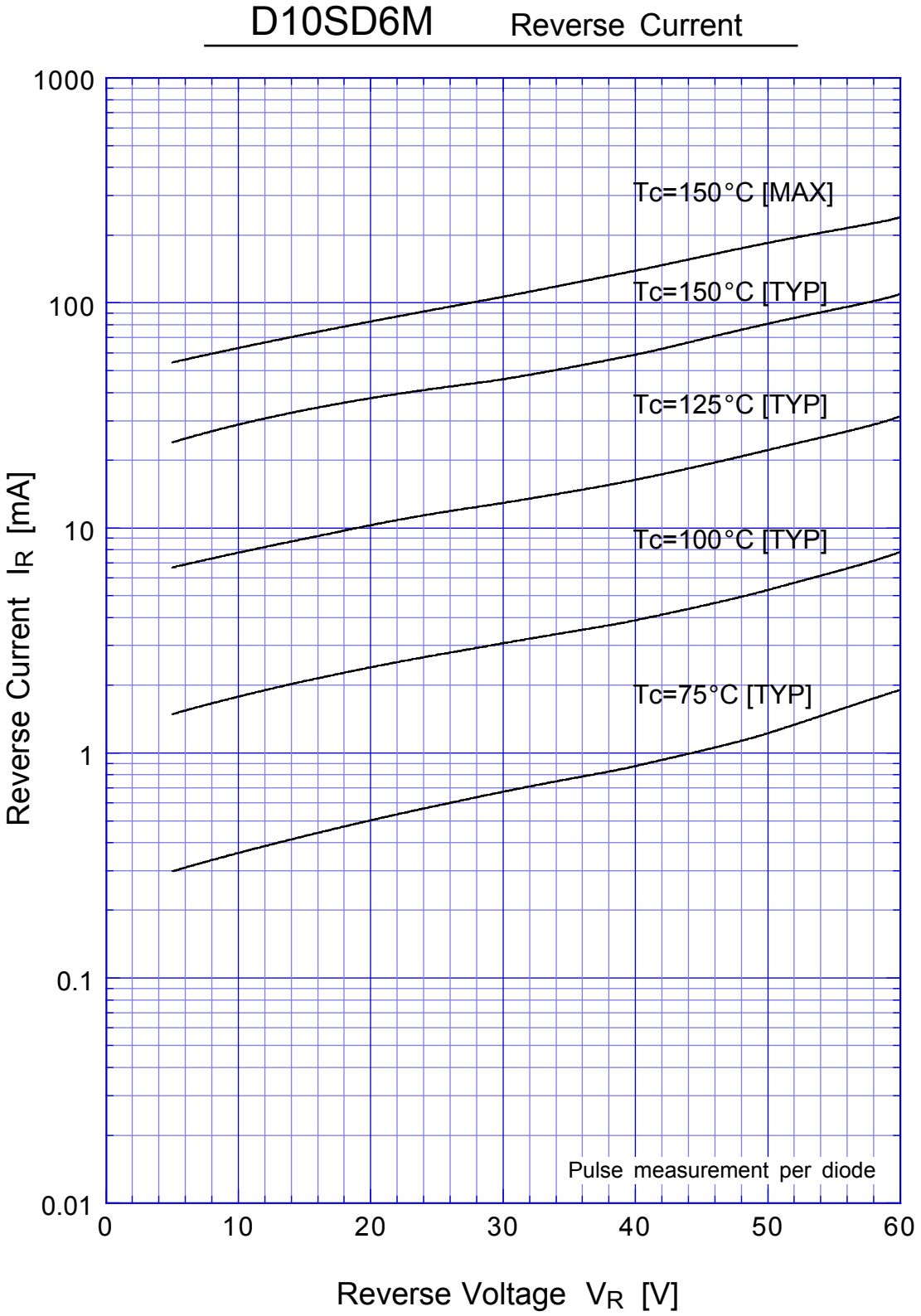
D10SD6M
Reverse Current
1000
100
10
1
0.1
0.01
Reverse Current IR [mA]
Tc=150°C [MAX]
Tc=150°C [TYP]
Tc=125°C [TYP]
Tc=100°C [TYP]
Tc=75°C [TYP]
Pulse measurement per diode
0
10
20
30
40
50
60
Reverse Voltage VR [V]

D10SD6M Reverse Power Dissipation

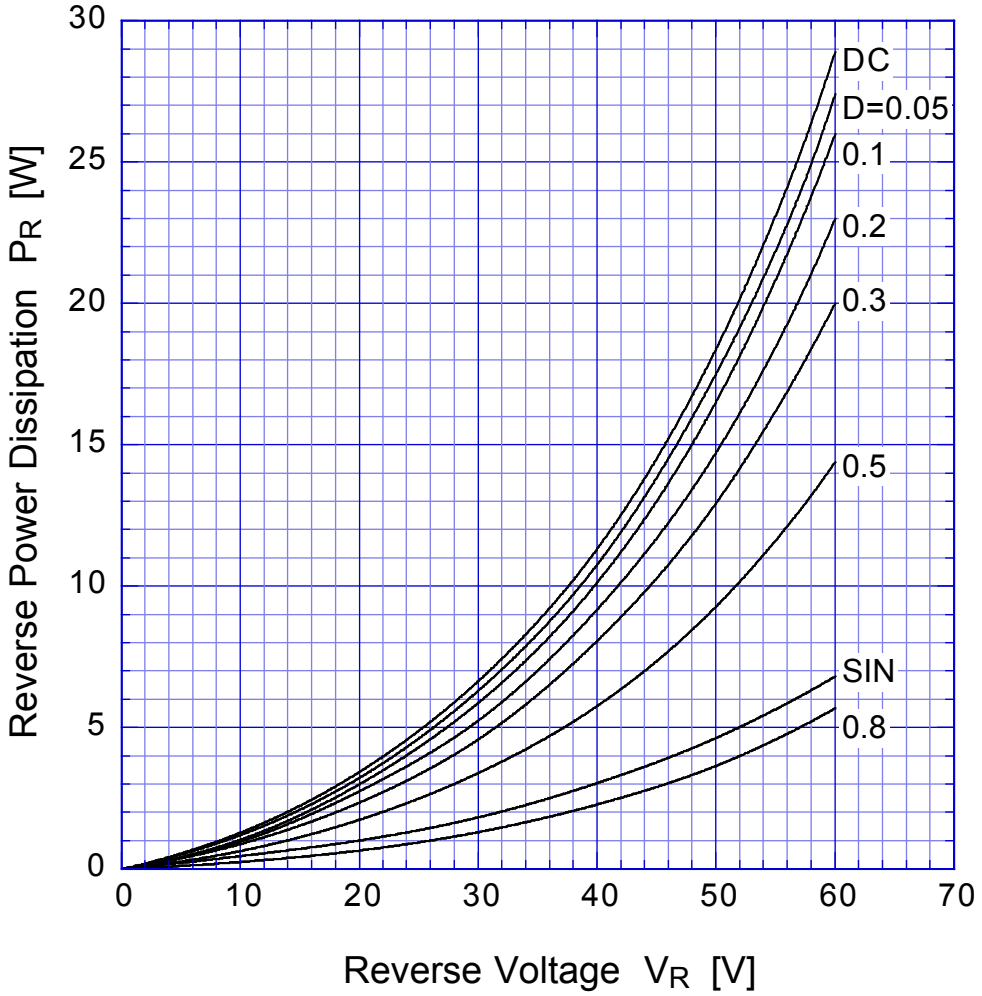

Tj = 150°C

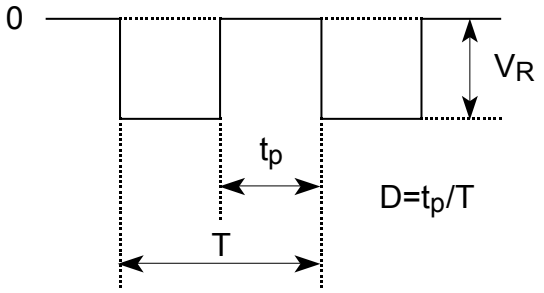

D10SD6M Forward Power Dissipation

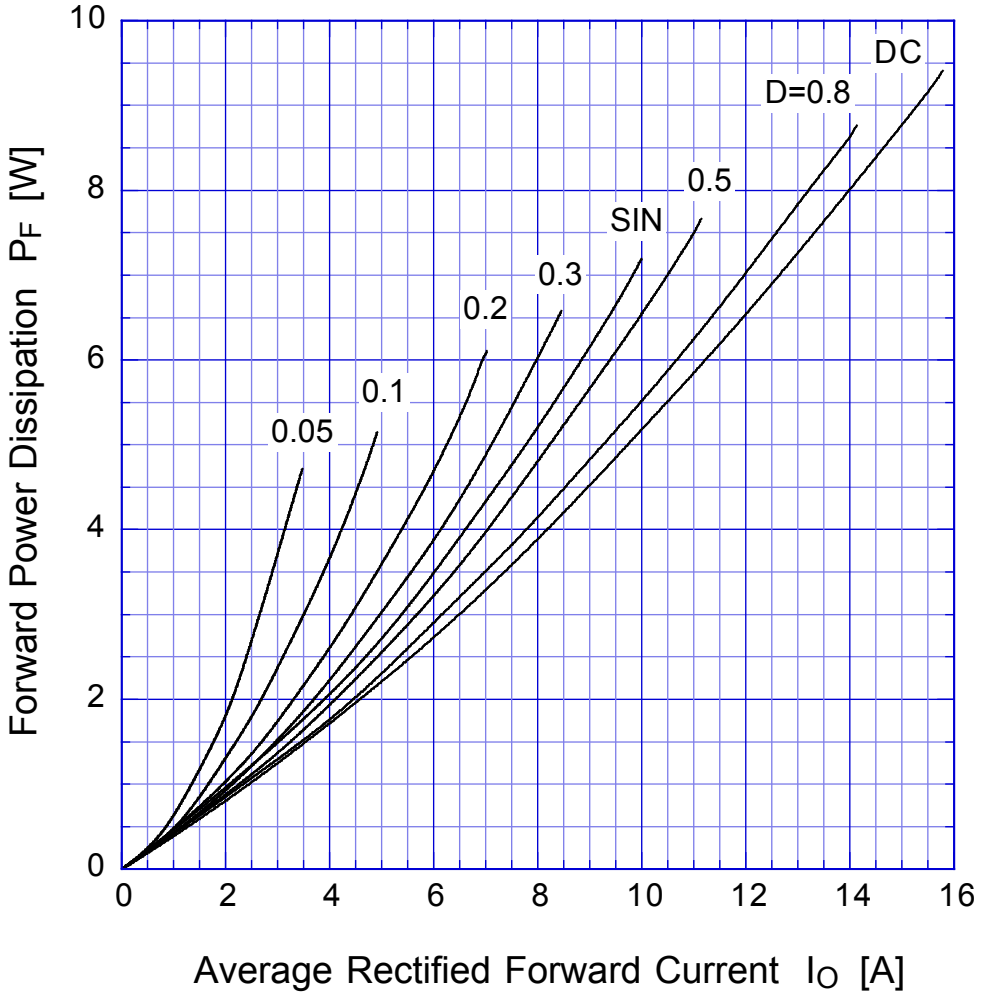

Tj = 150°C

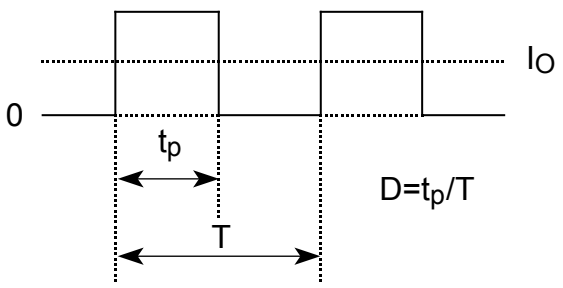

D10SD6M Derating Curve

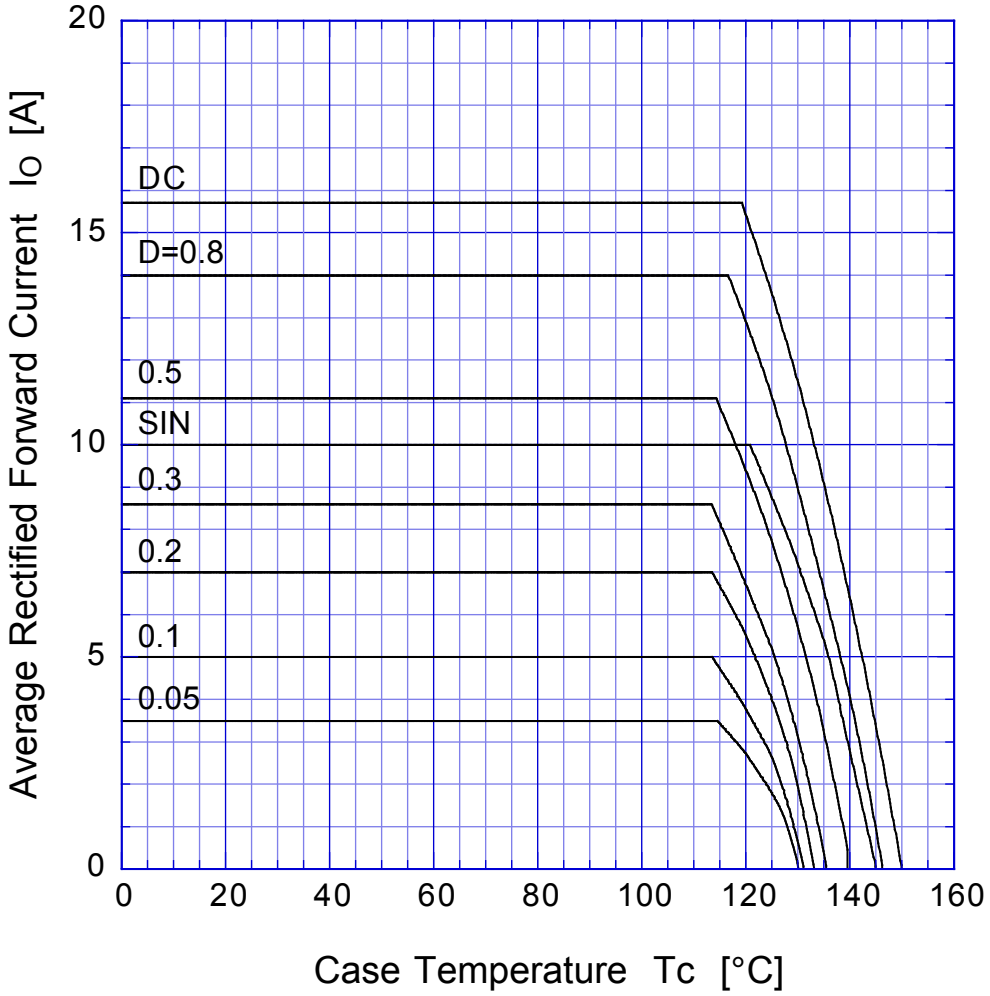

V_R = 30V

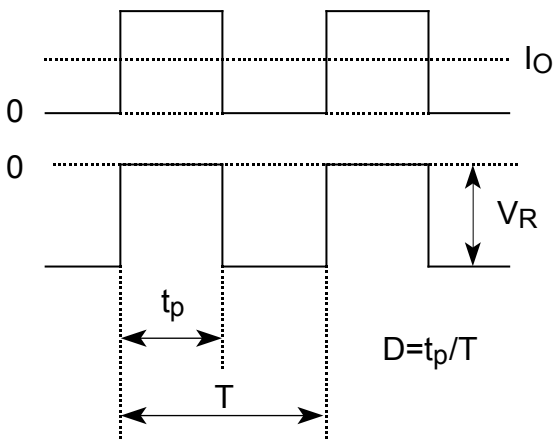

D10SD6M Derating Curve

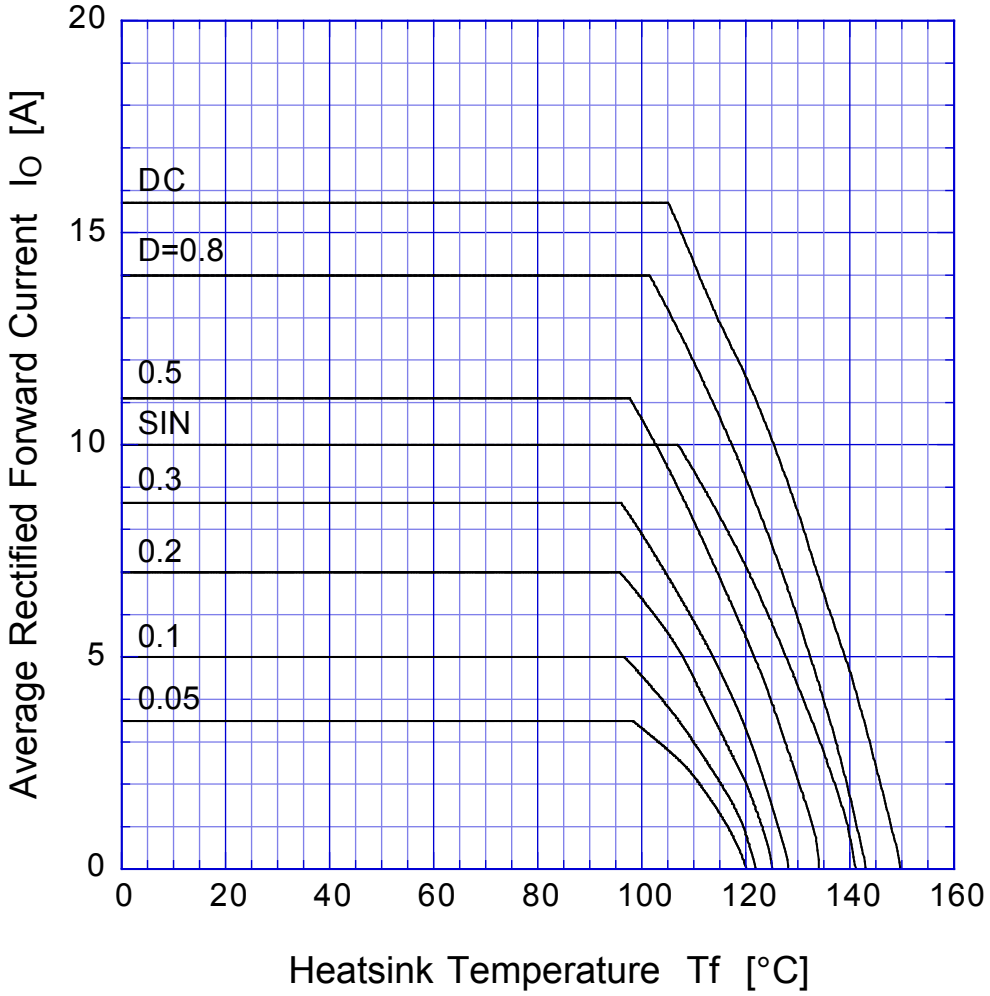

V_R = 30V

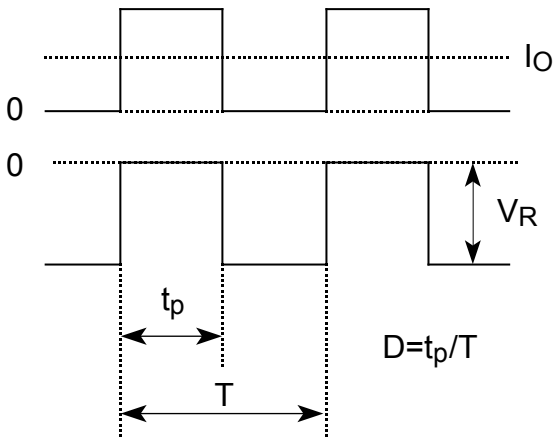

D10SD6M Peak Surge Forward Capability

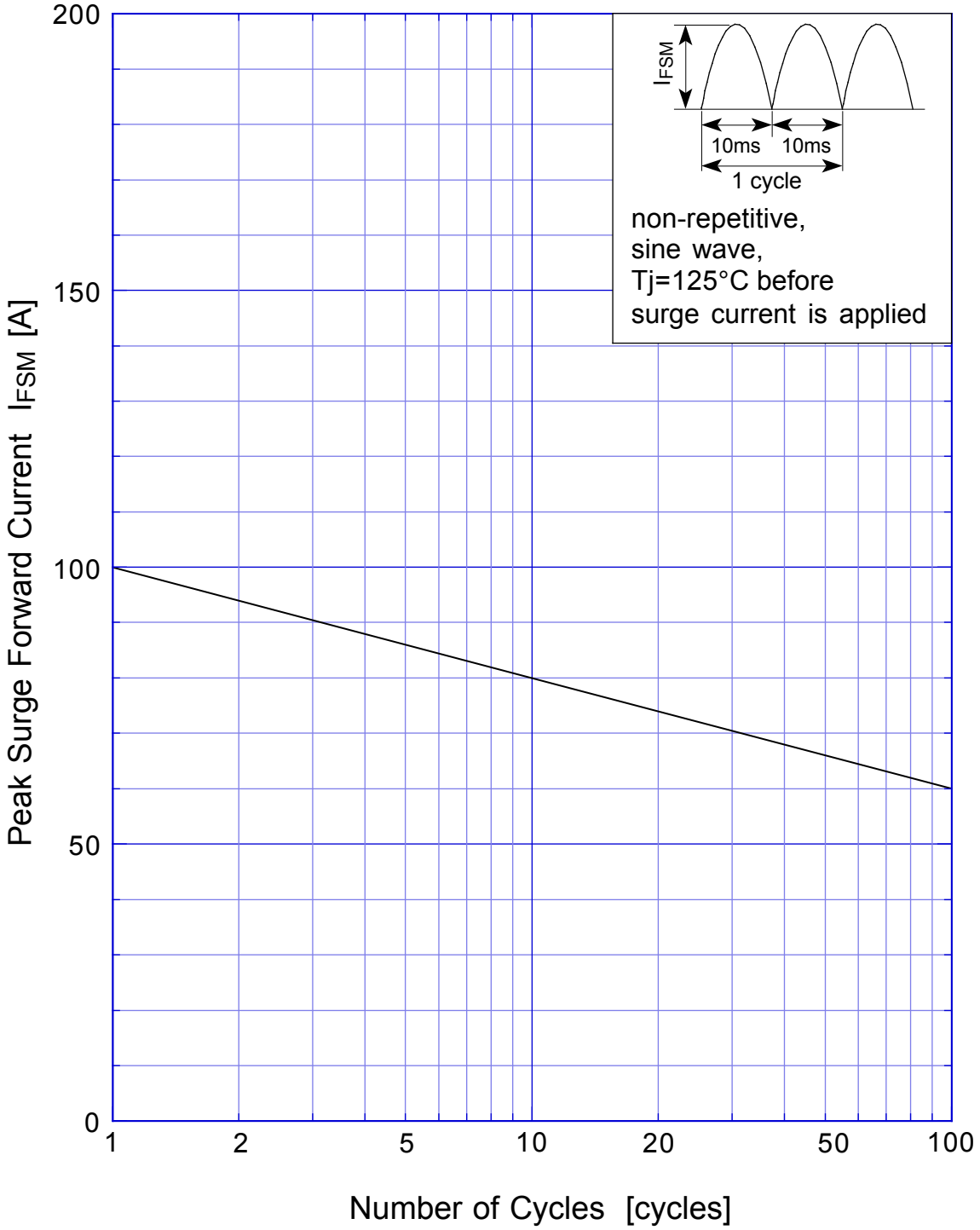

SBD Repetitive Surge Reverse Power Derating Curve

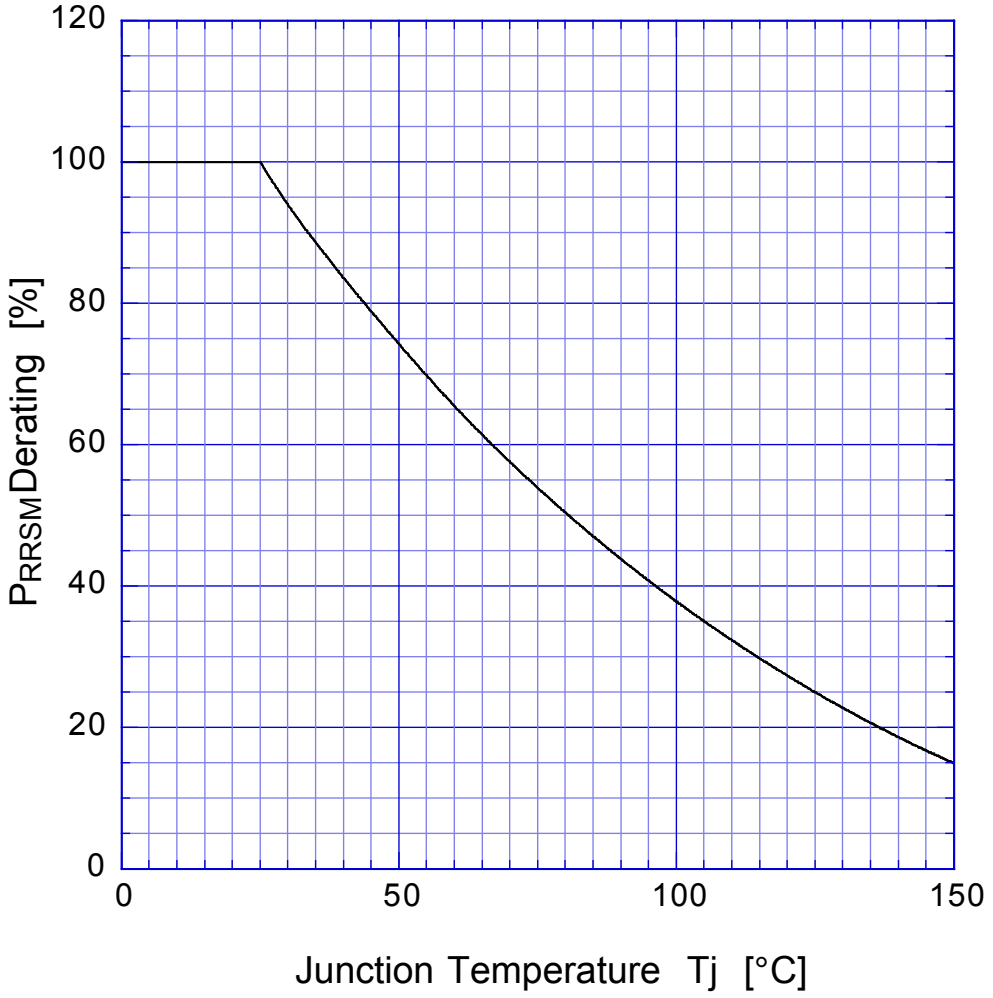

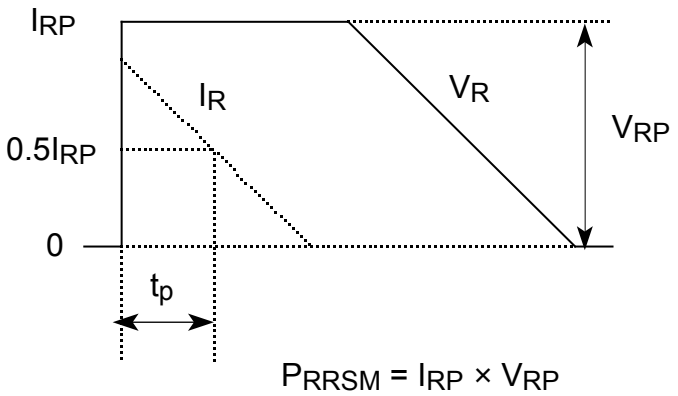

SBD Repetitive Surge Reverse Power Capability