查询D3L60供应商 捷多邦，专业PCB打样工厂，24小时加急出货

SHINDENGEN

Super Fast Recovery Rectifiers

Single

D3L60

600V 3A

FEATURES

- High Voltage
- trr50ns
- Fully Isolated Molding
- Dielectric strength 1.5kV guaranteed

APPLICATION

- PFC
- Switching power supply
- Free Wheel
- CTV+B output, lighting

OUTLINE DIMENSIONS

Case : ITO-220

(Unit : mm)

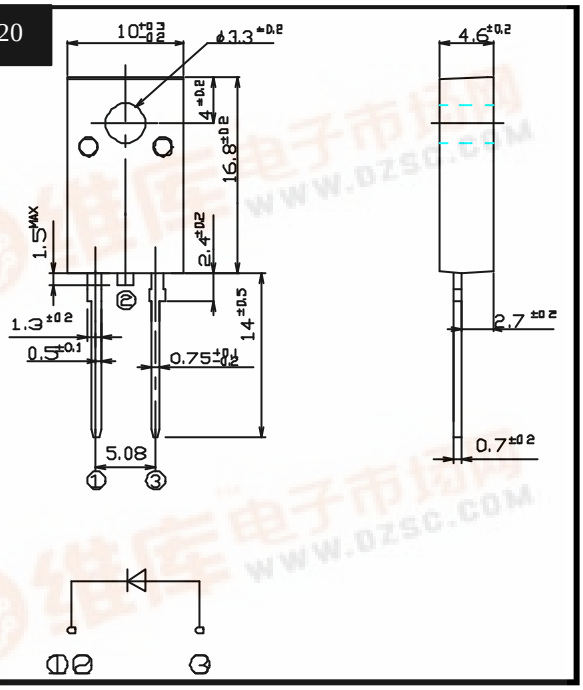

RATINGS

●Absolute Maximum Ratings (If not specified Tc=25°C)

Item	Symbol	Conditions	Ratings	Unit
Storage Temperature	Tstg		-55～150	°C
Operating Junction Temperature	Tj		150	°C
Maximum Reverse Voltage	V_{RM}		600	V
Average Rectified Forward Current	I_O	50Hz sine wave, R-load, Tc=127°C	3	A
Peak Surge Forward Current	I_{FSM}	50Hz sine wave, Non-repetitive 1 cycle peak value, Tj=25°C	60	A
Dielectric Strength	Vdis	Terminals to case, AC 1 minute	1.5	kV
Mounting Torque	TOR	(Recommended torque :0.3N·m)	0.5	N·m

●Electrical Characteristics (If not specified Tc=25°C)

Item	Symbol	Conditions	Ratings	Unit
Forward Voltage	V_F	I_F=3A, Pulse measurement	Max.1.65	V
Reverse Current	I_R	V_R=V_{RM}, Pulse measurement	Max.10	μA
Reverse Recovery Time	trr	I_F=0.5A, I_R=1A	Max.50	ns
Thermal Resistance	θjc	junction to case	Max.4.5	°C/W
	θjf	junction to heat-sink	Max.6	
	θja	junction to ambient	Max.55	

找PDF 维库一下 pdf.dzsc.com

Copyright © Copy 2009 Shindengen Electric Mfg. Co. Ltd.

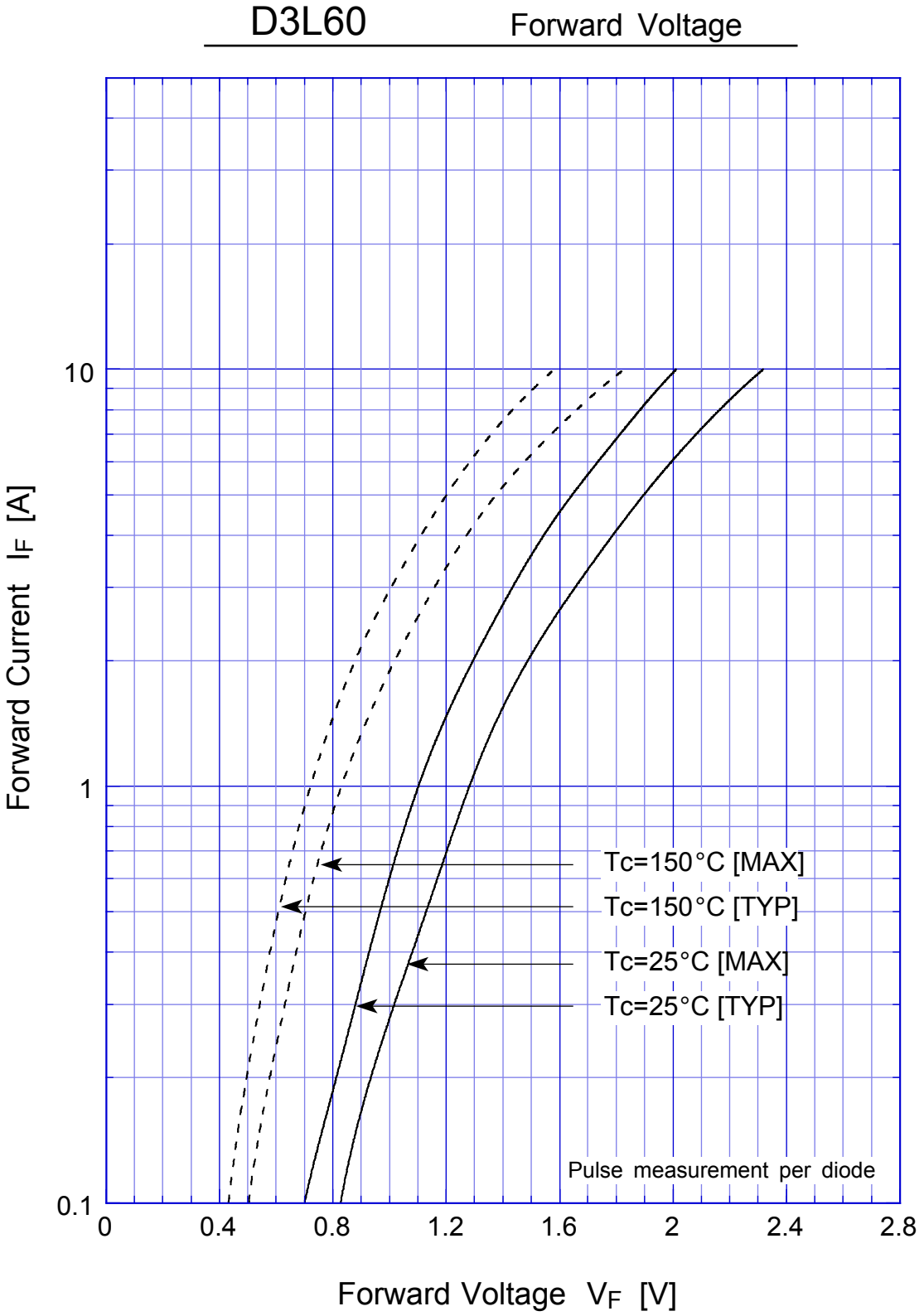
D3L60
Forward Voltage
Forward Current I_F [A]
10
1
0.1
0
0.4
0.8
1.2
1.6
2
2.4
2.8
Forward Voltage V_F [V]
Tc=150°C [MAX]
Tc=150°C [TYP]
Tc=25°C [MAX]
Tc=25°C [TYP]
Pulse measurement per diode

D3L60 Forward Power Dissipation

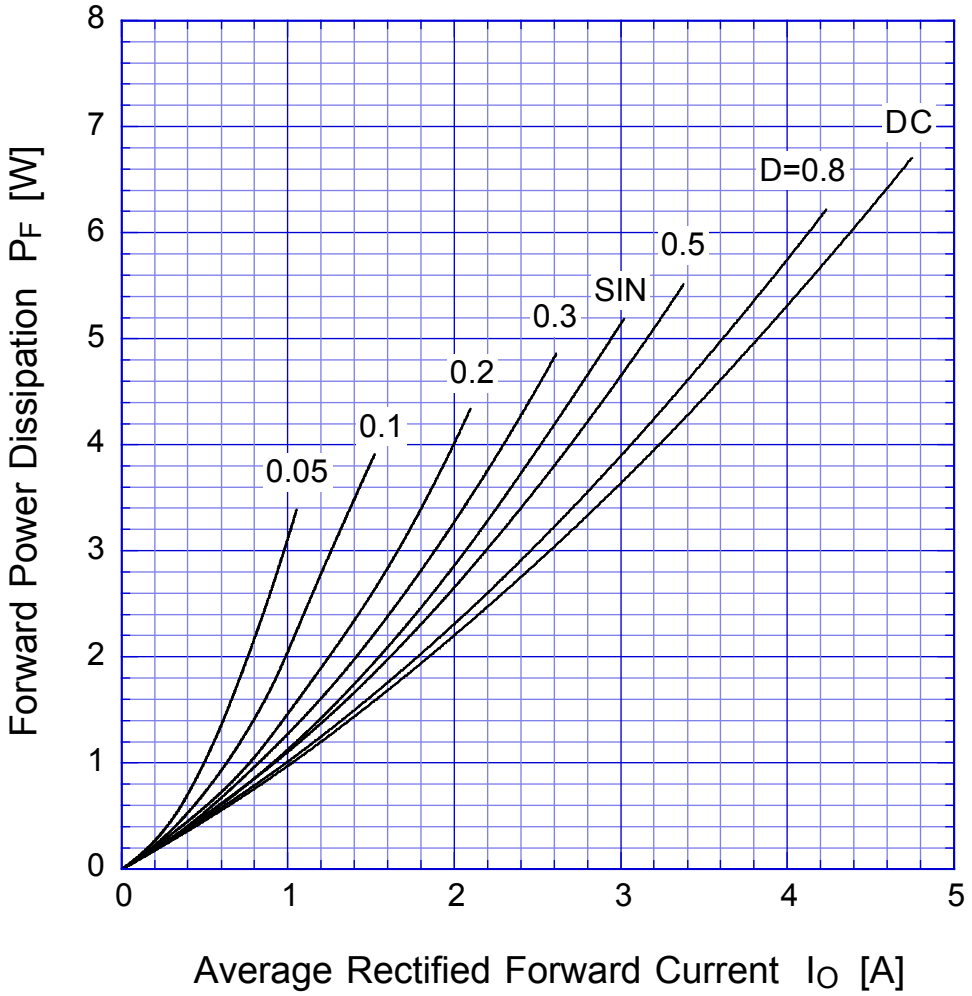

Tj = Tjmax

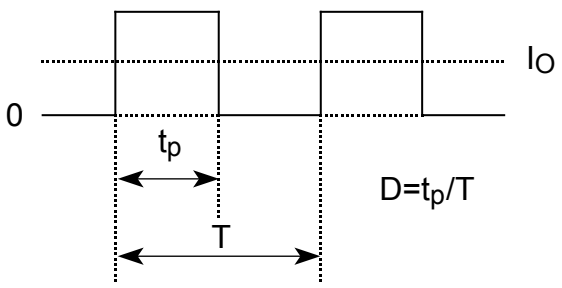

D3L60 Derating Curve

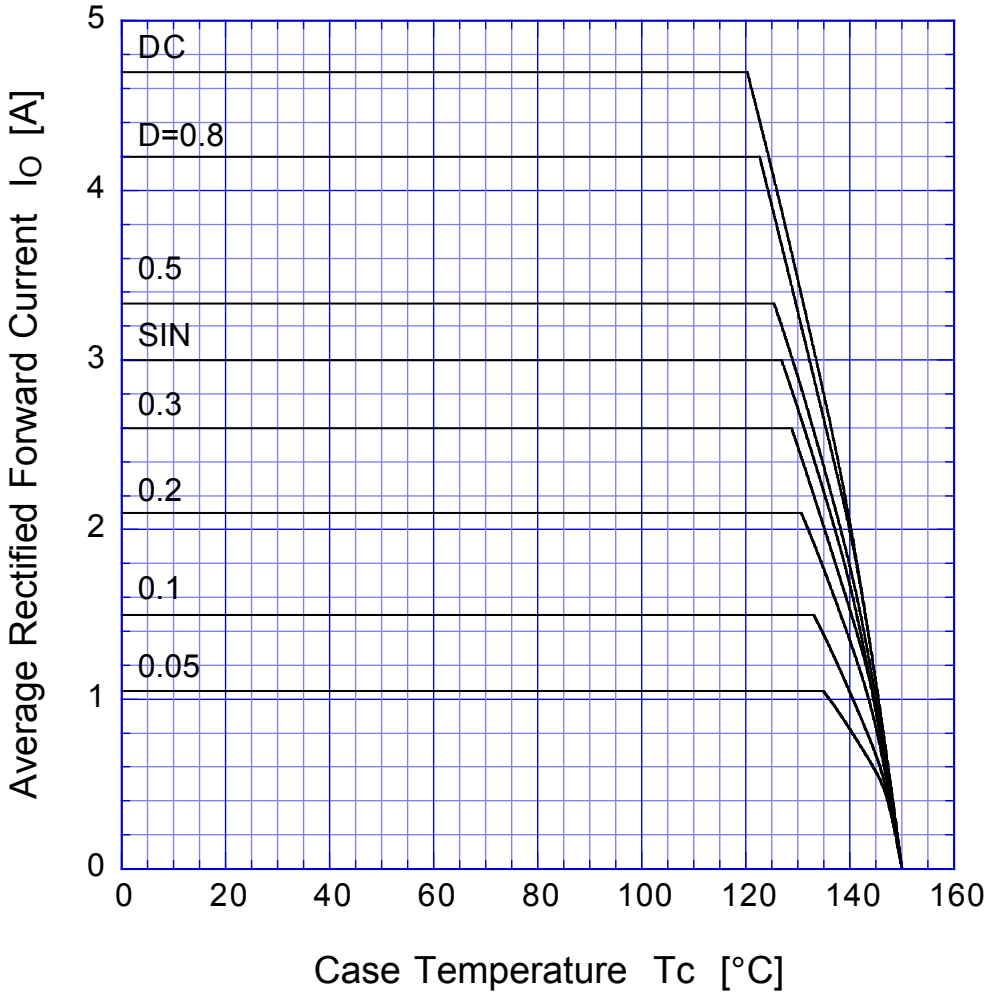

$V_R = V_{RM}$

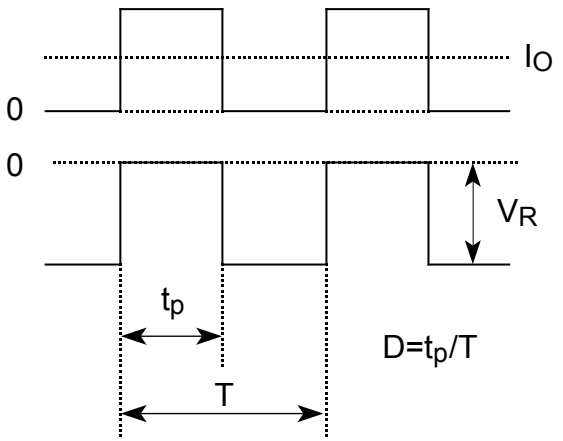

D3L60 Derating Curve

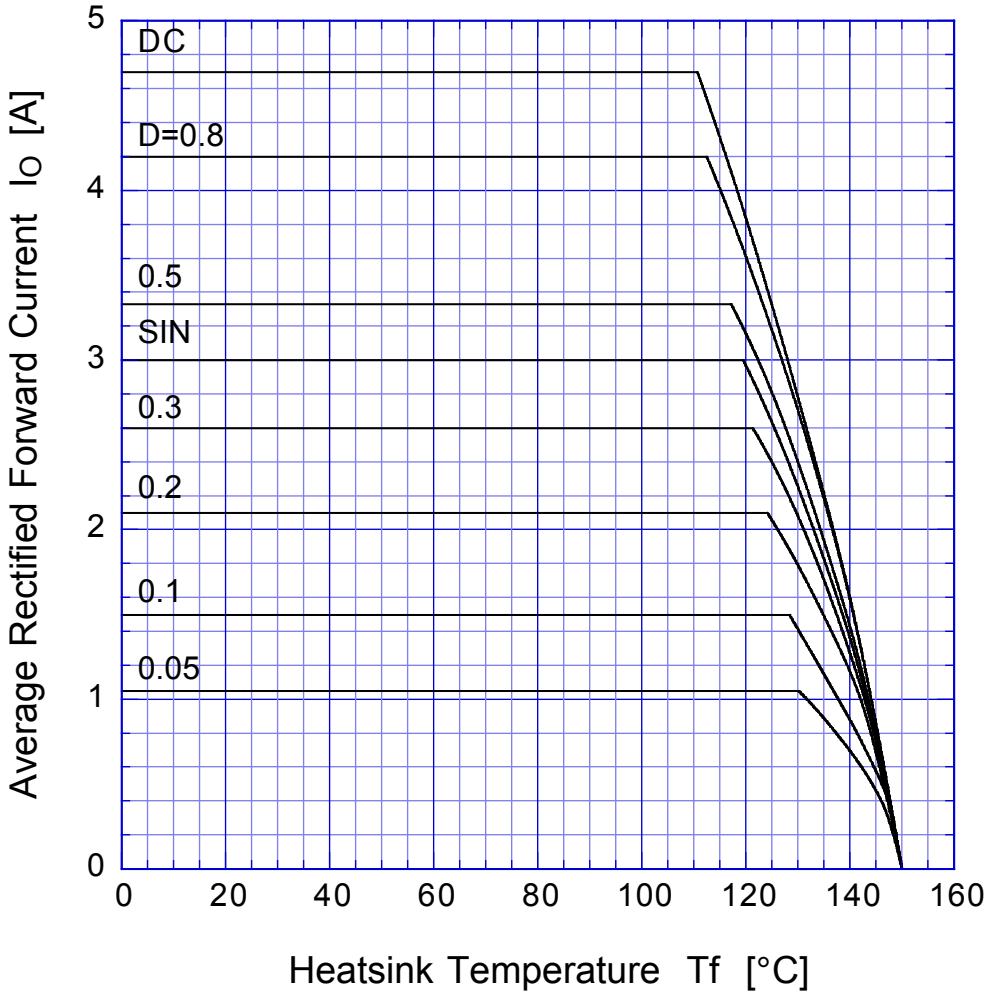

$V_R = V_{RM}$

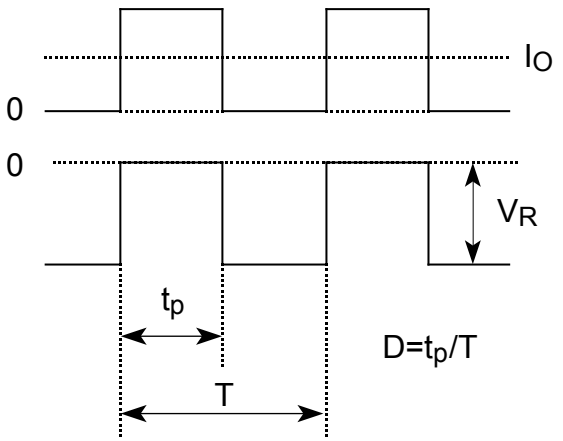

D3L60 Peak Surge Forward Capability

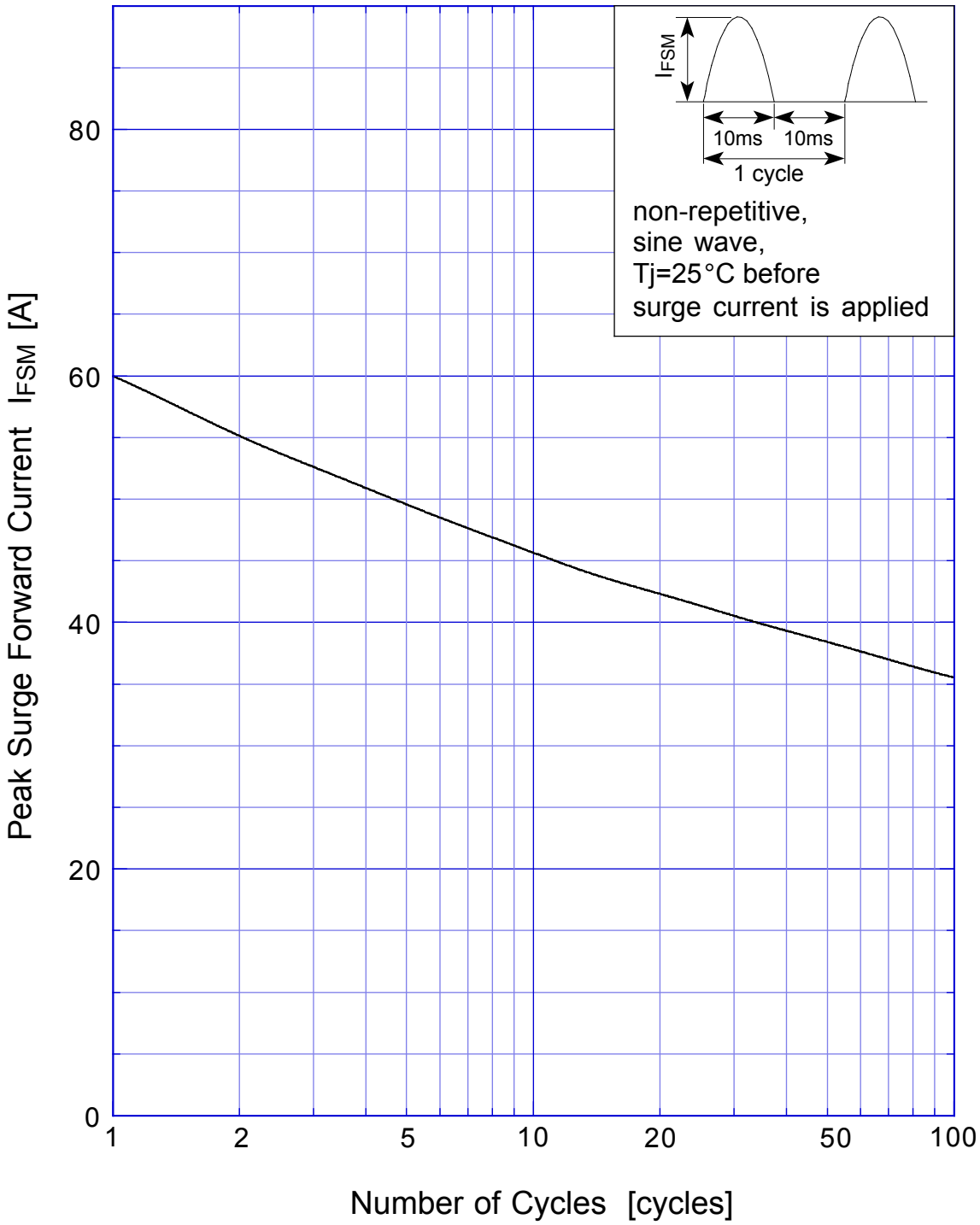

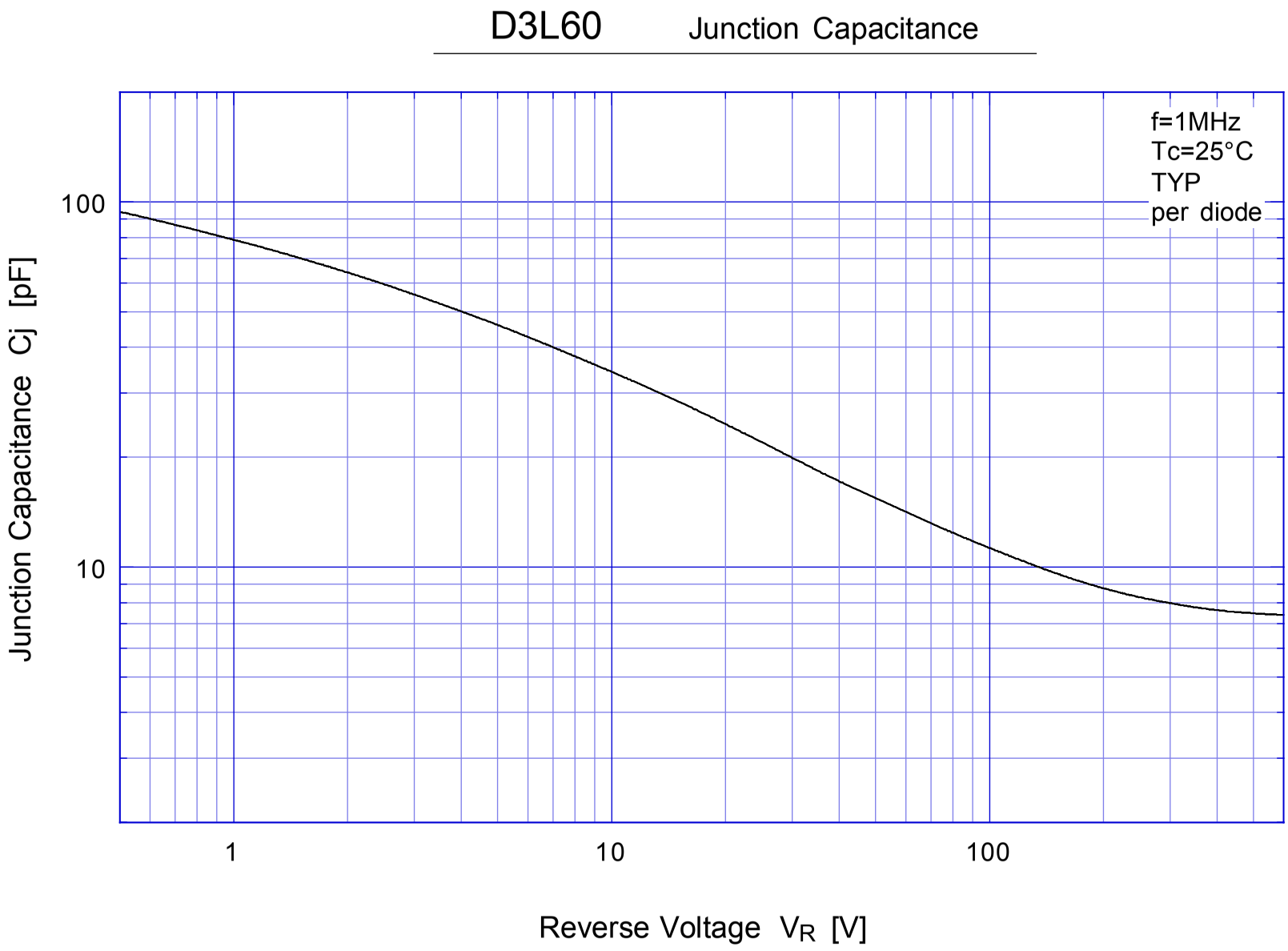
D3L60
Junction Capacitance
f=1MHz
Tc=25°C
TYP
per diode
100
10
1
10
100
Junction Capacitance Cj [pF]
Reverse Voltage VR [V]