查询TDA2320供应商 捷多邦，专业PCB打样工厂，24小时加急出货

SGS-THOMSON MICROELECTRONICS

TDA2320

PREAMPLIFIER FOR INFRARED REMOTE CONTROL SYSTEMS

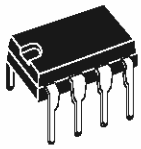

N
DIP8
(Plastic Package)

DESCRIPTION

The TDA2320 is a monolithic integrated circuit in Dip package especially designed to amplify the IR signal in remote controlled TV or radio sets. It directly interfaces the digital control circuitry.

The TDA2320 incorporates a two-stage amplifier with excellent sensitivity and high noise immunity. It can work with a single 5V supply voltage and flash or carrier transmission modes as provided for example by the M709A/M710A/MOS transmitters.

The TDA2320 is particularly intended to be used in conjunction with the M104 and M206 + M3870 remote control receivers.

ORDER CODES

Part Number	Temperature Range	Package
		N
TDA2320	-40°C, +105°C	•

PIN CONNECTIONS (top view)

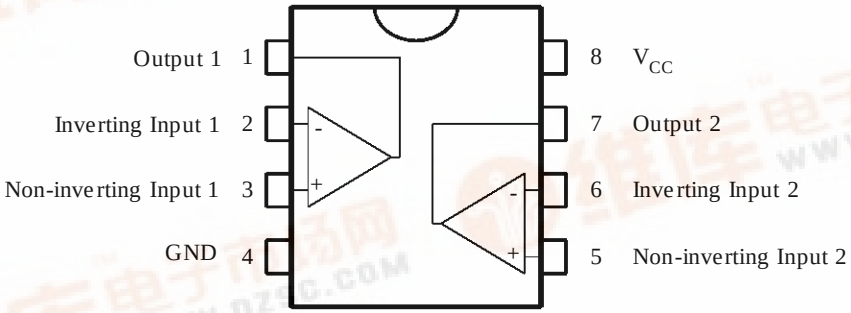

找PDF 维库一下 pdf.dzsc.com

SCHEMATIC DIAGRAM (1/2 TDA2320)

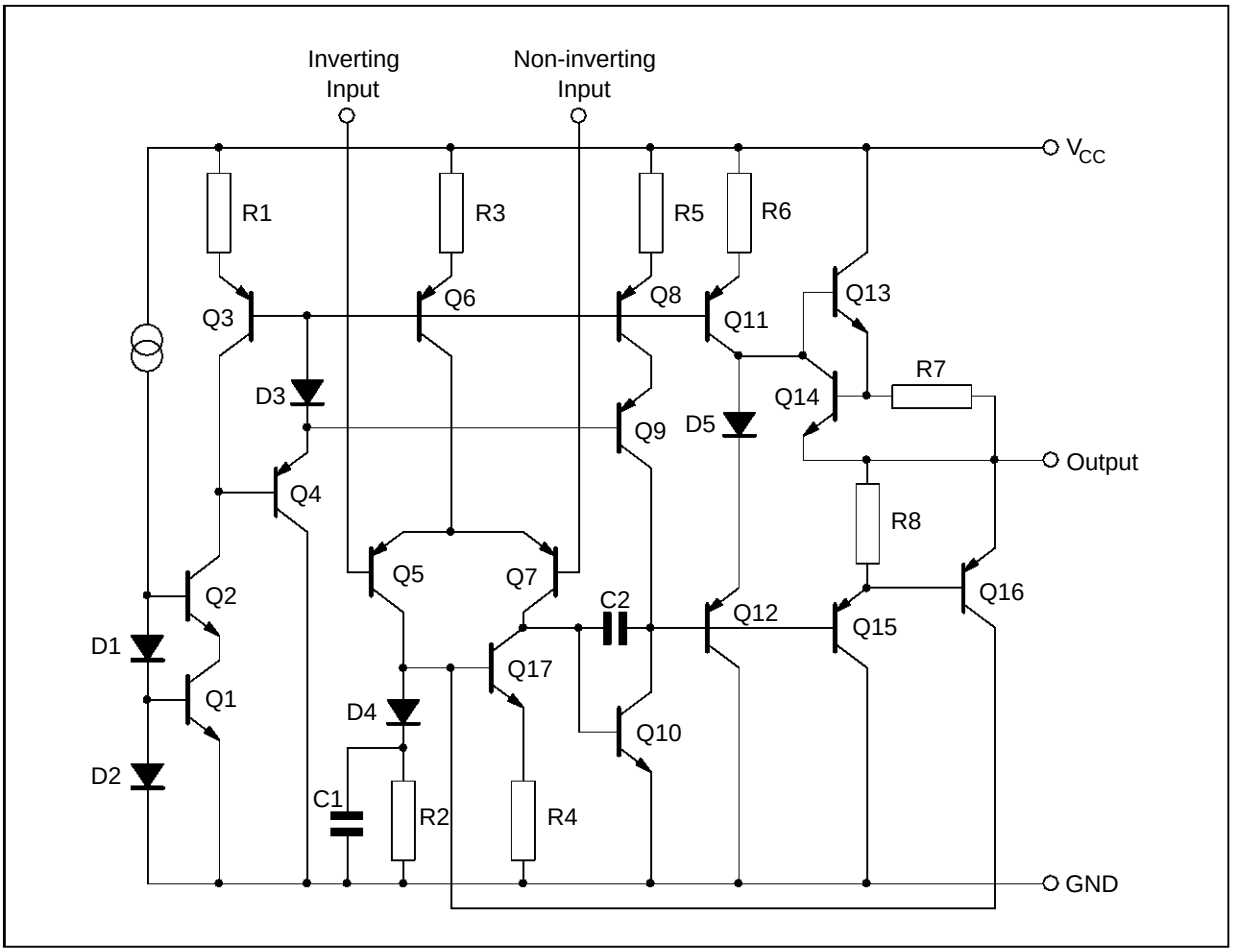

ABSOLUTE MAXIMUM RATINGS

Symbol	Parameter	Value	Unit
V_{CC}	Supply Voltage	20	V
P_{tot}	Total Power Dissipation at T_{amb} = 70°C	400	mW
T_{stg}, T_j	Storage and Junction Temperature	–40 to 150	°C

ELECTRICAL CHARACTERISTICS

V_{CC} = 5V, T_{amb} = 25°C (unless otherwise specified) (refer to the test circuits)

Symbol	Parameter	Min.	Typ.	Max.	Unit
V_{CC}	Supply Voltage	4		20	V
I_{CC}	Supply Current V_{CC} = 20V		 0.8	 2	mA
I_{ib}	Input Bias Current		100	500	nA
V_{io}	Input Offset Voltage R_s < 10kΩ		 0.5		mV
I_{io}	Input Offset Current		15		nA
A_{vd}	Large Signal Voltage Gain f = 1kHz f = 100kHz	 64	 70 30		dB
V_{OPP}	DC Output Voltage Swing		2.5		V
GBP	Gain-bandwidth Product f = 100kHz	 1.5	 3		MHz
SR	Slew Rate R_L = 2kΩ		 1.5		V/µs
e_n	Equivalent Input Noise Voltage f = 40kHz R_s = 10kΩ		 20		$\frac{nV}{\sqrt{Hz}}$
SVR	Supply Voltage Rejection Ratio f = 100Hz		 80		dB

APPLICATION CIRCUIT

FLASH MODE PREAMPLIFIER

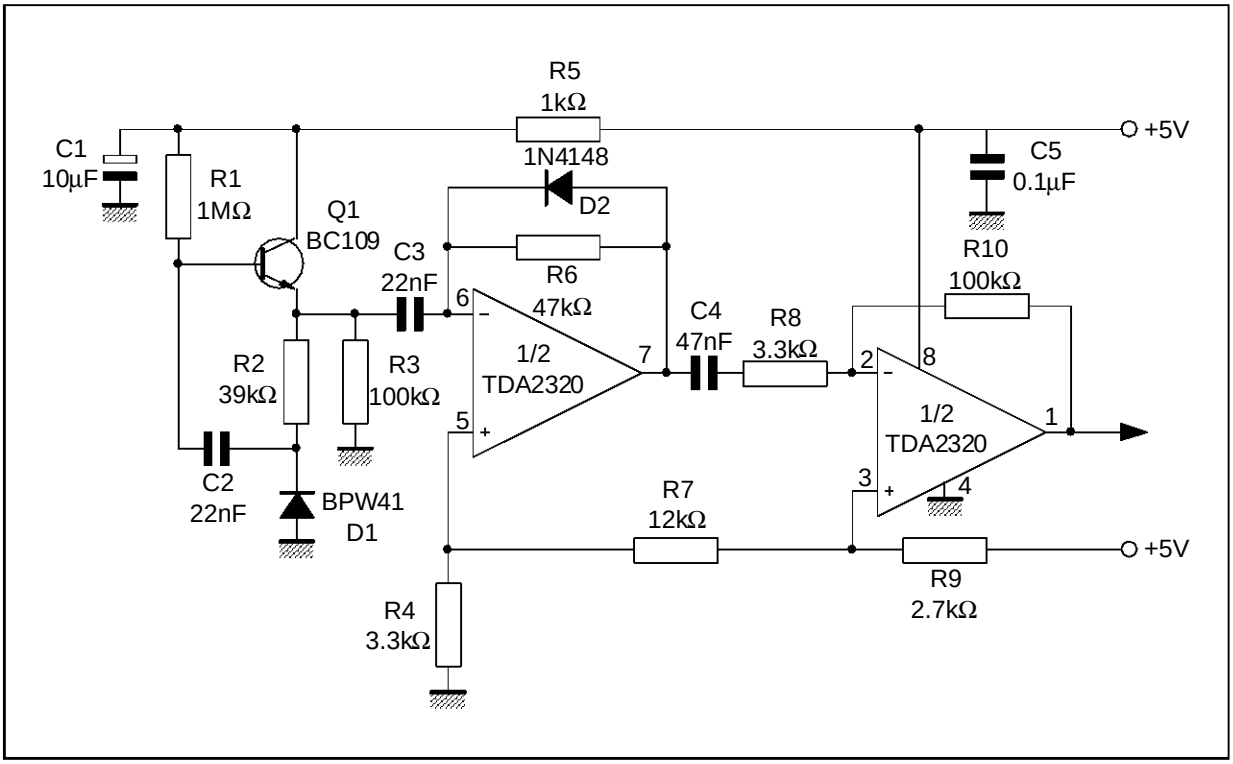

APPLICATION INFORMATION

Figure 1 : Application Circuit for Carrier Transmission Mode

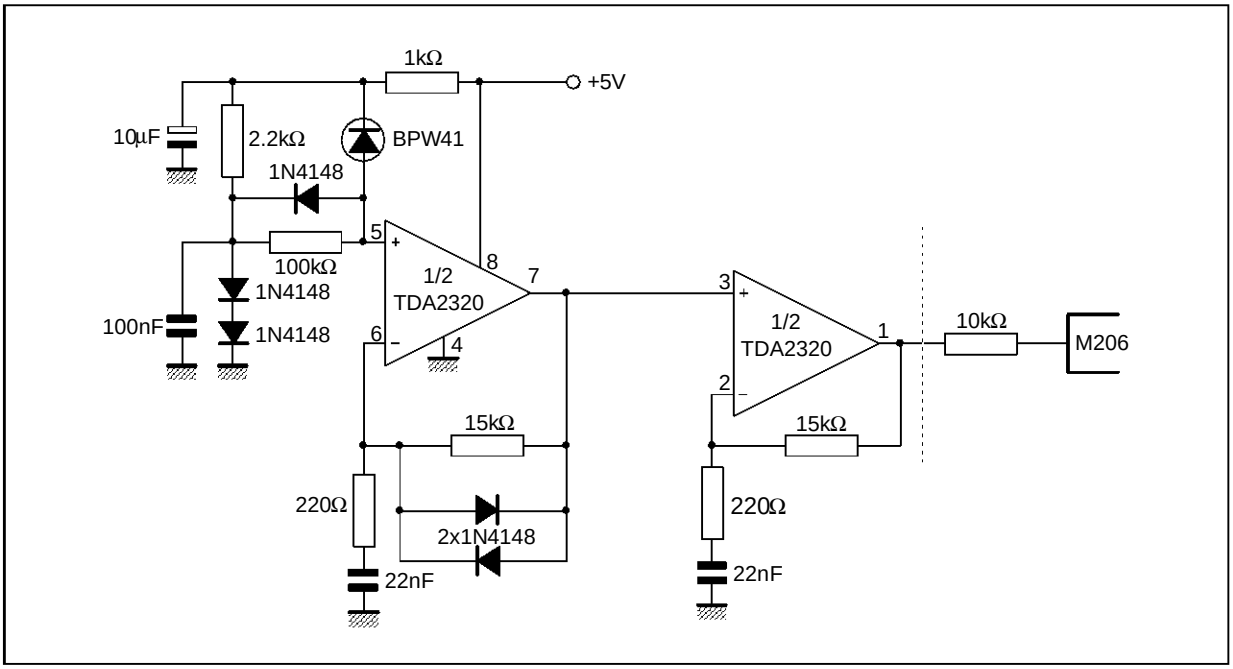

Figure 2 : IR Transmitter Using M709 or M710

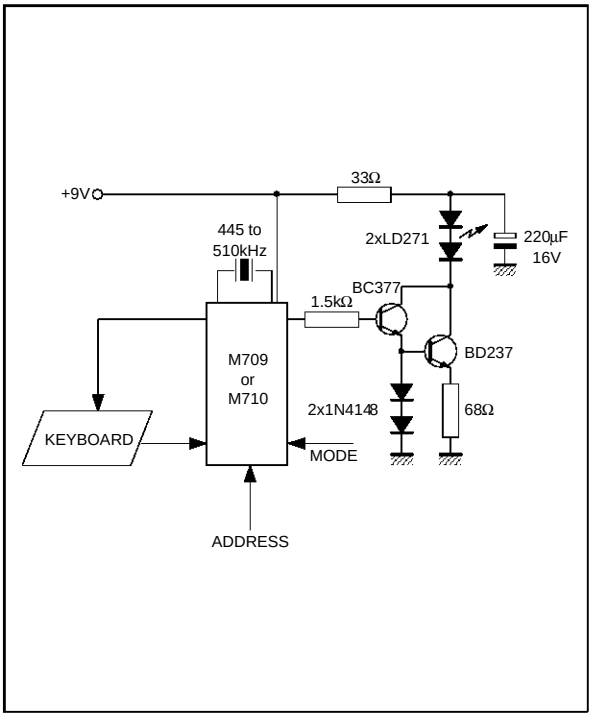

Figure 3 : MMC II - PLL TV Frequency Synthetizer

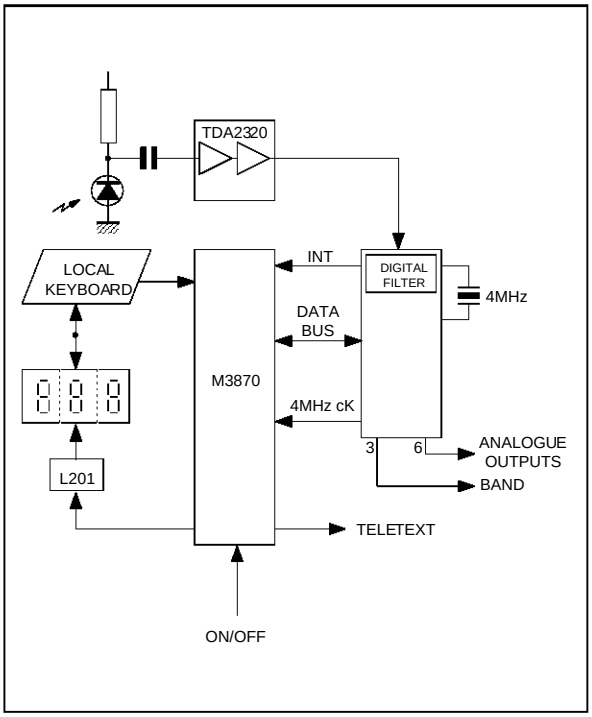

PACKAGE MECHANICAL DATA
8 PINS -PLASTIC DIP

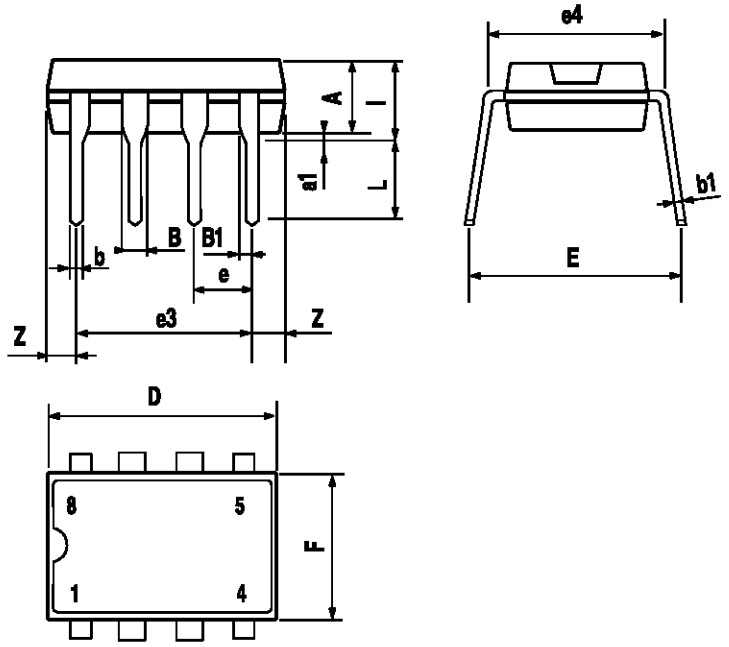

PM-DIP8.EPS

Dimensions	Millimeters			Inches		
	Min.	Typ.	Max.	Min.	Typ.	Max.
A		3.32			0.131	
a1	0.51			0.020		
B	1.15		1.65	0.045		0.065
b	0.356		0.55	0.014		0.022
b1	0.204		0.304	0.008		0.012
D			10.92			0.430
E	7.95		9.75	0.313		0.384
e		2.54			0.100	
e3		7.62			0.300	
e4		7.62			0.300	
F			6.6			0260
i			5.08			0.200
L	3.18		3.81	0.125		0.150
Z			1.52			0.060

DIP8.TBL

Information furnished is believed to be accurate and reliable. However, SGS-THOMSON Microelectronics assumes no responsibility for the consequences of use of such information nor for any infringement of patents or other rights of third parties which may result from its use. No license is granted by implication or otherwise under any patent or patent rights of SGS-THOMSON Microelectronics. Specifications mentioned in this publication are subject to change without notice. This publication supersedes and replaces all information previously supplied. SGS-THOMSON Microelectronics products are not authorized for use as critical components in life support devices or systems without express written approval of SGS-THOMSON Microelectronics.

© 1997 SGS-THOMSON Microelectronics – Printed in Italy – All Rights Reserved

SGS-THOMSON Microelectronics GROUP OF COMPANIES
Australia - Brazil - Canada - China - France - Germany - Hong Kong - Italy - Japan - Korea - Malaysia - Malta - Morocco
The Netherlands - Singapore - Spain - Sweden - Switzerland - Taiwan - Thailand - United Kingdom - U.S.A.

ORDER CODE :