查询TDA3803A供应商 捷多邦，专业PCB打样工厂，24小时加急出货

DATA SHEET

TDA3803A
Stereo/dual TV sound decoder circuit

Product specification
File under Integrated Circuits, IC02

November 1987

Philips Semiconductors

PHILIPS

GENERAL DESCRIPTION

The TDA3803A is a stereo/dual TV sound decoder circuit with static switching for processing two AF signals in TV and VCR equipment. The LOW/HIGH static switching signals control the AF output selector. Two operational amplifiers perform bandpass filtering of the identification signals.

Features

- Amplification of the two AF input signals by integrated operational amplifiers
- Low distortion stereo de-matrix
- All operational amplifiers offset compensated
- De-emphasis with operational amplifiers, preferably applied to the output terminals
- Two output ports each with two channels for headphones and loudspeakers
- Dual sound information at one port, each port individually switchable from sound I to sound II and sound II to sound I
- Mute function; while mute is active, it is possible to connect an external mono AF input signal to pin 10 appearing at pins 20 to 23.
- Identification without additional signals (horizontal etc.)

QUICK REFERENCE DATA

Supply voltage (pin 13)	$V_P = V_{13\text{-}12}$	typ.	12	V
Supply current (pin 13)	$I_P = I_{13}$	typ.	28	mA
Pilot carrier amplifier gain control range	ΔG_v	>	40	dB
A.F. input signals; at G_v = 0 dB				
(r.m.s. value)	$V_{i(rms)}$	=	1	V
LED output current	I_{LED}	typ.	12	mA
Weighted signal-to-noise ratio				
of the a.f. signal switches (CCIR468/2)	(S+N)/N	≥	60	dB
Crosstalk in stereo mode	α_S	>	40	dB
Crosstalk in dual sound mode	α_{DS}	>	60	dB

PACKAGE OUTLINE

28-lead DIL; plastic (SOT117); SOT117-1; 1996 November 25.

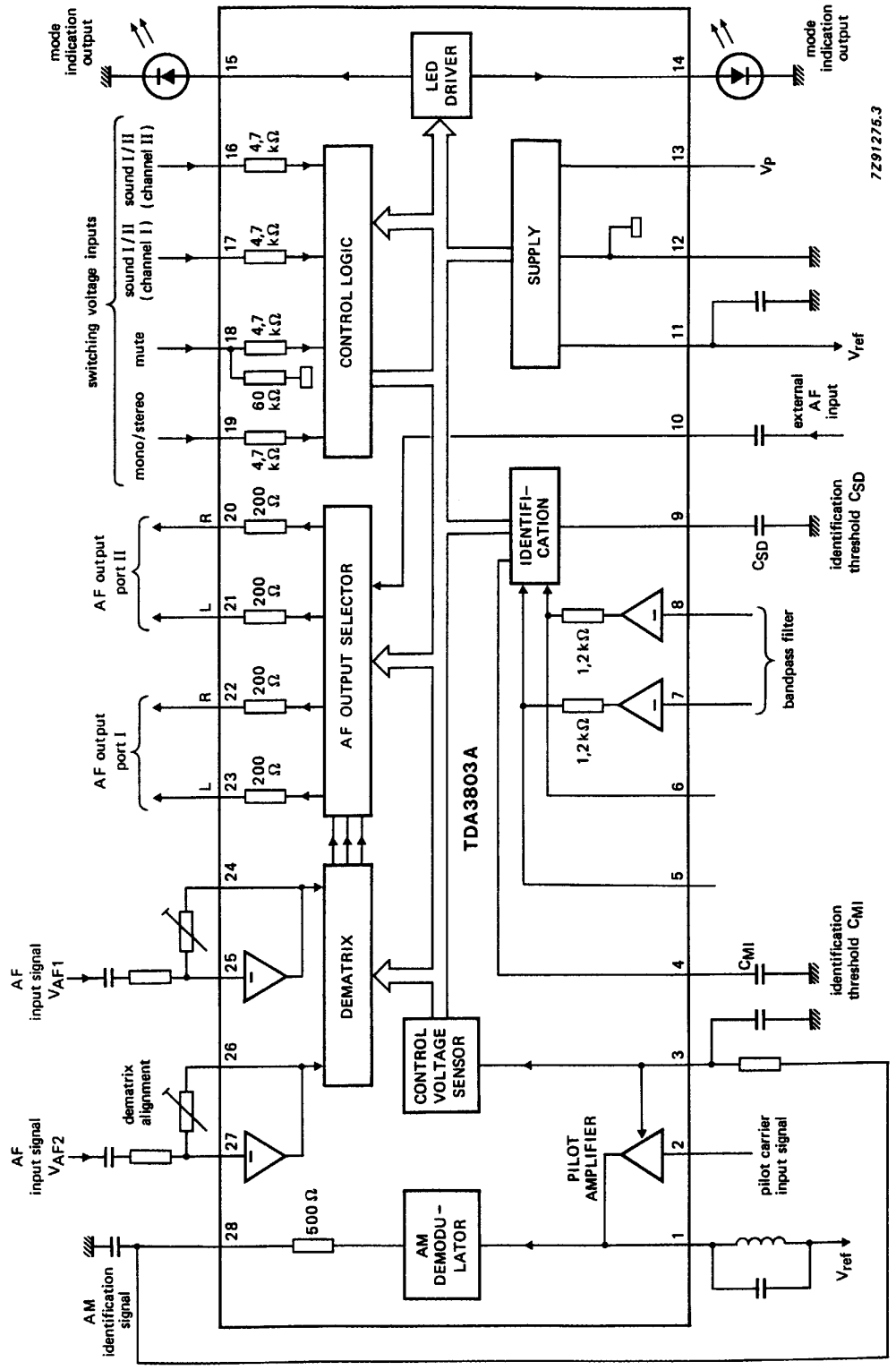

Fig.1 Block diagram.

RATINGS

Limiting values in accordance with the Absolute Maximum System (IEC 134)

Supply voltage (pin 13)	$V_P = V_{13-12}$	max.	14	V
Voltages with respect to pin 12 (ground)				
pins 25; 27 and 28	$V_{25;\ 27;\ 28-12}$	max.	V_P	
Voltages				
pin 1 to pin 10	V_{n-12}	max.	V_P	
pin 14 to pin 19	V_{n-12}	max.	V_P	
Currents				
pin 11	I_{11}	max.	3	mA
pins 20; 21; 22; 23	$I_{20;21;22;23}$	max.	10	mA
pin 28	$-I_{28}$	max.	3	mA
Total power dissipation	P_{tot}	max.	1,5	W
Storage temperature range	T_{stg}	–25 to + 125		°C
Operating ambient temperature range	T_{amb}	0 to + 70		°C

CHARACTERISTICS

V_P = 12 V; T_{amb} = 25 °C; overall voltage gain (G_v) = 1; (R_S = R_R); measured in Fig.2 with a 1 kHz signal.
AF input AF2 = AF1 = 0,5 V, pilot carrier input signal $V_{2\text{-}12(rms)}$ = 16 mV, m = 0,5 and with adjusted de-matrix circuit; unless otherwise specified

PARAMETER	SYMBOL	MIN.	TYP.	MAX.	UNIT
Supply (pin 13)					
Supply voltage range	$V_P = V_{13\text{-}12}$	10,8	12	13,2	V
Supply current (without LED current)	$I_P = I_{13}$	–	28	35	mA
Reference voltage (pin 11)	V_{ref}	–	6	–	V
Input resistance (dynamic)	$R_{11\text{-}12}$	–	4	–	kΩ
AF part					
Amplification	G_v	–40	–	18	dB
Input signal at G_v = 1	$V_{AF1} = V_{AF2}$	–	–	1	V
Mono AF input signal (pin 10); note 1					
Input signal	$V_{10\text{-}12}$	–	–	2	V
DC input voltage level	$V_{10\text{-}12}$	–	6	–	V
Input resistance	$R_{10\text{-}12}$		16	–	kΩ
Stereo mode					
AF output port I					
pin 22: right					
pin 23: left					
AF output port II					
pin 20: right					
pin 21: left					
Output signal (THD ≤ 0,5%)					
port I ($V_{23\text{-}12} = V_{22\text{-}12}$)	V_{oI}	–	–	2	V
port II ($V_{21\text{-}12} = V_{20\text{-}12}$)	V_{oII}	–	–	2	V
Weighted signal-to-noise ratio					
of the AF signal switches (in accordance with CCIR468/2)	(S+N)/N		65	–	dB
Unweighted signal-to-noise	(S+N)/N	60	–	–	dB
Total harmonic distortion					
($V_{20;21;22;23\text{-}12}$ = 0,5 V; G_v = 1)	THD	–	0,05	–	%
Crosstalk attenuation (selective)					
stereo mode (f_1 = 1 kHz; f_2 = 400 Hz)	α_S	40	–	–	dB
dual sound mode (f = 250 Hz to 12,5 kHz)	α_{DS}	60	–	–	dB

PARAMETER	SYMBOL	MIN.	TYP.	MAX.	UNIT
DC input voltage level					
at pins 25 and 27	$V_{25;\ 27\text{-}12}$	–	6	–	V
DC output voltage level					
at pins 20; 21; 22 and 23	$V_{n\text{-}12}$	–	6	–	V
Output resistance					
at pins 20; 21; 22 and 23	$V_{n\text{-}12}$	–	200	–	Ω
Identification part					
Pilot carrier amplifier					
input signal (pin 2)	$V_{2\text{-}12}$	5	–	–	mV
gain control range	ΔG_v	40	–	–	dB
controlled output signal (pin 1)					
(peak-to-peak value)	$V_{1\text{-}12(p\text{-}p)}$	–	300	–	mV
Input resistance (pin 2)	$R_{2\text{-}12}$	–	60	–	kΩ
Output resistance (pin 1)	$R_{1\text{-}12}$	1	–	–	MΩ
DC input voltage level (pin 2)					
applied externally (see Fig.2)	$V_{2\text{-}12}$	–	6	–	V
DC output voltage level (pin 28)					
without gain control	$V_{28\text{-}12}$	–	6	–	V
with gain control	$V_{28\text{-}12}$	–	7,9	–	V
Identification signal (pin 28)					
(peak-to-peak value)	$V_{28\text{-}12(p\text{-}p)}$	–	2,0	–	V
Filter operational amplifiers					
open loop gain	G_o	78	–	–	dB
Identification frequency evaluation					
No identification signal (lower threshold)	$V_{4\text{-}12}$	–	–	2,5	V
Identification signal (upper threshold)	$V_{4\text{-}12}$	4,7	–	–	V
Stereo transmission (lower threshold)	$V_{9\text{-}12}$	–	–	2,5	V
Dual sound transmission (upper threshold)	$V_{9\text{-}12}$	4,7	–	–	V
Control logic part					
Mute input voltage (pin 18)					
mute OFF	$V_{18\text{-}12}$	–	–	0,8	V
mute ON (see the remarks to pin 10)	$V_{18\text{-}12}$	2	–	–	V
Switching stereo/mono and sound I/sound II					
Stereo transmission					
switching voltage to pin 19 (pin 17 and 16 not affected)					
output ports I and II mono	$V_{19\text{-}12}$	–	–	0,8	V
output ports I and II stereo	$V_{19\text{-}12}$	2	–	–	V

PARAMETER	SYMBOL	MIN.	TYP.	MAX.	UNIT
Mono transmission both output ports I and II mono					
Dual sound transmission					
switching voltage to pin 16 (pin 19 and 17 not affected)					
output port II sound I	$V_{16\text{-}12}$	2	–	–	V
output port II sound II	$V_{16\text{-}12}$	–	–	0,8	V
switching voltage to pin 17 (pin 16 and 19 not affected)					
output port I sound I	$v_{17\text{-}12}$	–	–	0,8	V
output port I sound II	$v_{17\text{-}12}$	2	–	–	V
Mode indication (pins 14 and 15; see also Table 1)					
Output current	$-I_{14;\,15}$	9	12	15	mA
Output voltage (note 3)	$V_{14;\,15\text{-}12}$	0	–	8	V
Stereo/mono transmission:					
LED indication is valid for the transmission mode					
Dual sound transmission:					
LED indication is valid for port I					

Table 1 Mode indication (note 2)

TRANSMISSION MODE	LED PIN 15	LED PIN 14
mono	OFF	OFF
stereo:		
stereo selection; $V_{19\text{-}12} \geq 2$ V	ON	ON
mono selection; $V_{19\text{-}12} \leq 0{,}8$ V	ON	ON
dual sound		
sound I selection; $V_{17\text{-}12} \leq 0{,}8$ V	ON	OFF
sound II selection; $V_{17\text{-}12} \geq 2$ V	OFF	ON

Notes to the characteristics

1. An input signal at pin 10 appears at pins 20 to 23 if the mute input (pin 18) is activated ($V_{18\text{-}12} \geq 2$ V).
2. With mute (pin 18) ON both LEDs (pin 14 and 15) are switched OFF.
3. Pin 14 and 15 are also suitable as output switches to control TDA3810.
   At LED OFF and $I_{14,\,15} \leq 100$ µA, then $V_{14,\,15\text{-}12} \leq 200$ mV.

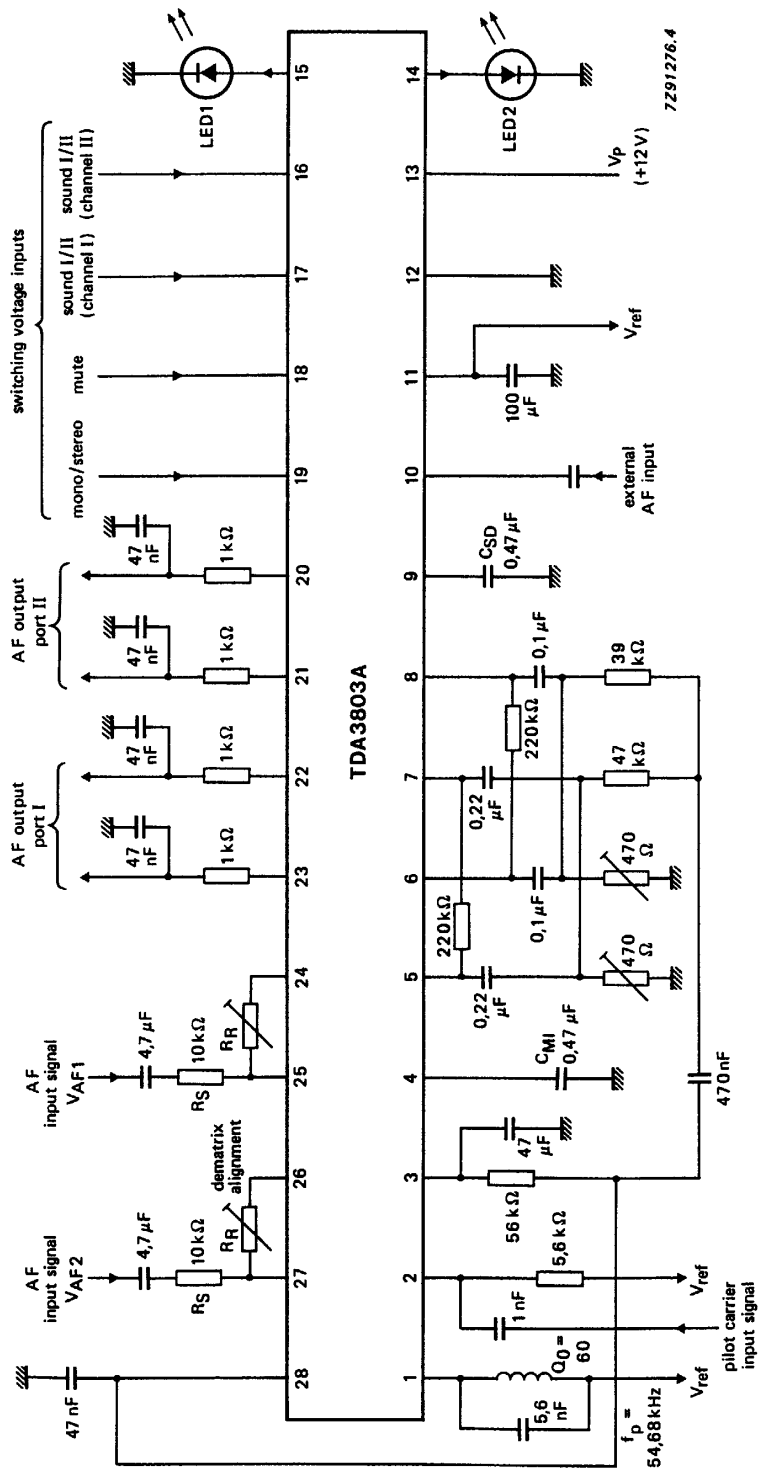

Fig.2 Application diagram and test circuit; external components.

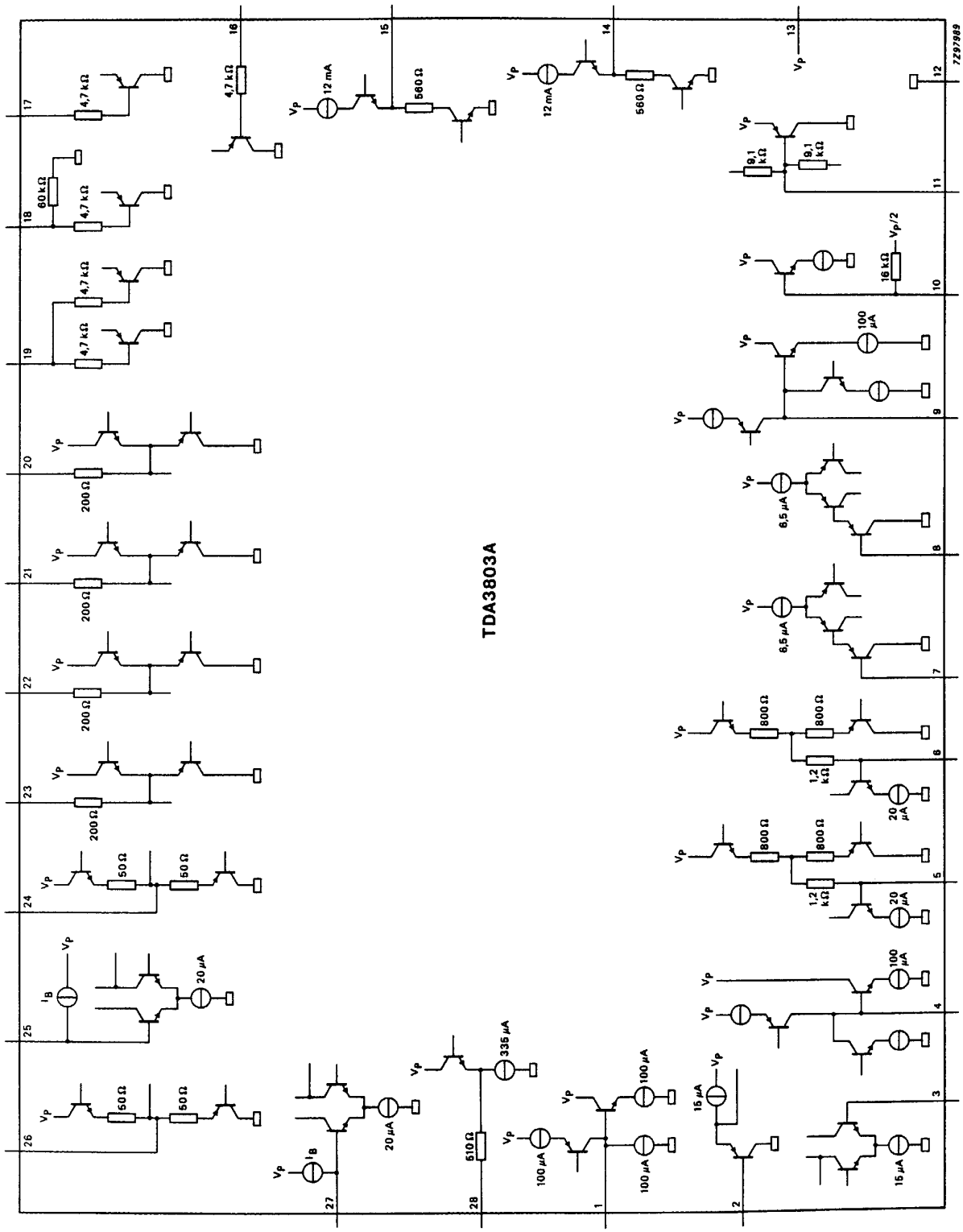

Fig.3 Application diagram and test circuit; part of internal circuitry.

PACKAGE OUTLINE

DIP28: plastic dual in-line package; 28 leads (600 mil) **SOT117-1**

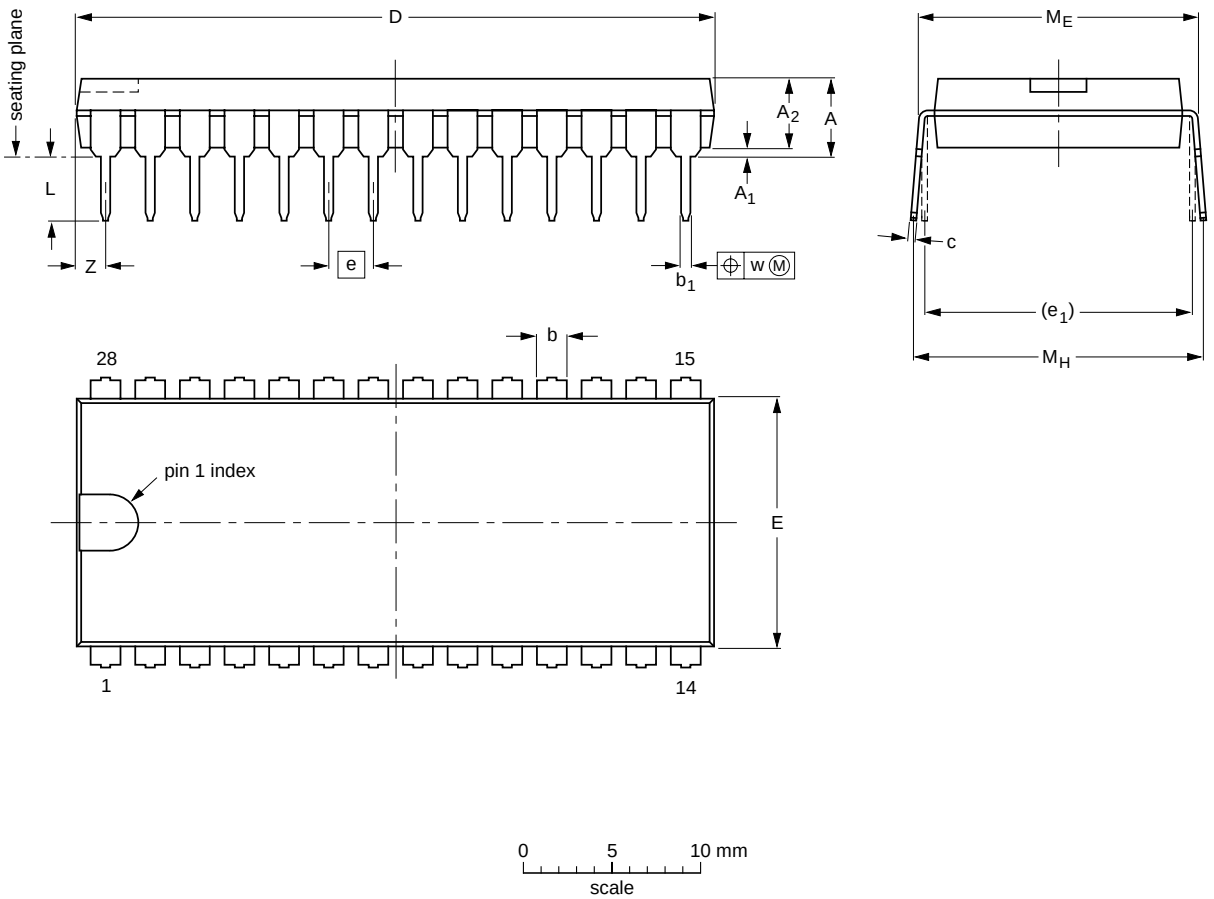

DIMENSIONS (inch dimensions are derived from the original mm dimensions)

UNIT	A max.	A_1 min.	A_2 max.	b	b_1	c	D (1)	E (1)	e	e_1	L	M_E	M_H	w	Z (1) max.
mm	5.1	0.51	4.0	1.7 1.3	0.53 0.38	0.32 0.23	36.0 35.0	14.1 13.7	2.54	15.24	3.9 3.4	15.80 15.24	17.15 15.90	0.25	1.7
inches	0.20	0.020	0.16	0.066 0.051	0.020 0.014	0.013 0.009	1.41 1.34	0.56 0.54	0.10	0.60	0.15 0.13	0.62 0.60	0.68 0.63	0.01	0.067

Note

1. Plastic or metal protrusions of 0.25 mm maximum per side are not included.

OUTLINE VERSION	REFERENCES				EUROPEAN PROJECTION	ISSUE DATE
	IEC	JEDEC	EIAJ			
SOT117-1	051G05	MO-015AH				~~92-11-17~~ 95-01-14

SOLDERING

Introduction

There is no soldering method that is ideal for all IC packages. Wave soldering is often preferred when through-hole and surface mounted components are mixed on one printed-circuit board. However, wave soldering is not always suitable for surface mounted ICs, or for printed-circuits with high population densities. In these situations reflow soldering is often used.

This text gives a very brief insight to a complex technology. A more in-depth account of soldering ICs can be found in our *"IC Package Databook"* (order code 9398 652 90011).

Soldering by dipping or by wave

The maximum permissible temperature of the solder is 260 °C; solder at this temperature must not be in contact with the joint for more than 5 seconds. The total contact time of successive solder waves must not exceed 5 seconds.

The device may be mounted up to the seating plane, but the temperature of the plastic body must not exceed the specified maximum storage temperature ($T_{stg\ max}$). If the printed-circuit board has been pre-heated, forced cooling may be necessary immediately after soldering to keep the temperature within the permissible limit.

Repairing soldered joints

Apply a low voltage soldering iron (less than 24 V) to the lead(s) of the package, below the seating plane or not more than 2 mm above it. If the temperature of the soldering iron bit is less than 300 °C it may remain in contact for up to 10 seconds. If the bit temperature is between 300 and 400 °C, contact may be up to 5 seconds.

DEFINITIONS

Data sheet status	
Objective specification	This data sheet contains target or goal specifications for product development.
Preliminary specification	This data sheet contains preliminary data; supplementary data may be published later.
Product specification	This data sheet contains final product specifications.
Limiting values	
Limiting values given are in accordance with the Absolute Maximum Rating System (IEC 134). Stress above one or more of the limiting values may cause permanent damage to the device. These are stress ratings only and operation of the device at these or at any other conditions above those given in the Characteristics sections of the specification is not implied. Exposure to limiting values for extended periods may affect device reliability.	
Application information	
Where application information is given, it is advisory and does not form part of the specification.	

LIFE SUPPORT APPLICATIONS

These products are not designed for use in life support appliances, devices, or systems where malfunction of these products can reasonably be expected to result in personal injury. Philips customers using or selling these products for use in such applications do so at their own risk and agree to fully indemnify Philips for any damages resulting from such improper use or sale.