查询TDA5144供应商 捷多邦，专业PCB打样工厂，24小时加急出货

INTEGRATED CIRCUITS

DATA SHEET

TDA5144
Brushless DC motor drive circuit

Product specification
Supersedes data of March 1992
File under Integrated Circuits, IC11

June 1994

Philips Semiconductors

PHILIPS

pdf.dzsc.com

Brushless DC motor drive circuit TDA5144

FEATURES

- Full-wave commutation (using push/pull drivers at the output stages) without position sensors
- Built-in start-up circuitry
- Three push-pull outputs:
  - output current 2.0 A (typ.)
  - low saturation voltage
  - built-in current limiter
  - soft-switching outputs for low Electromagnetic Interference (EMI)
- Thermal protection
- Flyback diodes
- Tacho output without extra sensor
- Transconductance amplifier for an external control transistor.

APPLICATIONS

- General purpose spindle driver (e.g. for hard disk)
- Laser beam printer.

GENERAL DESCRIPTION

The TDA5144 is a bipolar integrated circuit used to drive 3-phase brushless DC motors in full-wave mode. The device is sensorless (saving of 3 hall-sensors) using the back-EMF sensing technique to sense the rotor position. A special circuit is built-in to reduce the EMI (soft switching output stages). It is ideally suited as a drive circuit for hard disk drive spindle motor requiring powerful output stages (current limit of 2.0 A). It can also be used in e.g. laser beam printer and other applications.

QUICK REFERENCE DATA

Measured over full voltage and temperature range.

SYMBOL	PARAMETER	CONDITIONS	MIN.	TYP.	MAX.	UNIT
V_P	supply voltage	note 1	4	–	18	V
V_{VMOT}	input voltage to the output driver stages	note 2	1.7	–	16	V
V_{DO}	drop-out output voltage	I_O = 100 mA	–	0.90	1.05	V
I_{LIM}	current limiting	V_{VMOT} = 10 V; R_O = 1.2 Ω	1.8	2.0	2.4	A

Notes

1. An unstabilized supply can be used.
2. $V_{VMOT} = V_P$; +AMP IN = –AMP IN = 0 V; all outputs I_O = 0 mA.

ORDERING INFORMATION

TYPE NUMBER	PACKAGE			
	PINS	PIN POSITION	MATERIAL	CODE
TDA5144AT	20	SOL	plastic	SOT163-1
TDA5144T	28	SOL	plastic	SOT136-1

BLOCK DIAGRAM

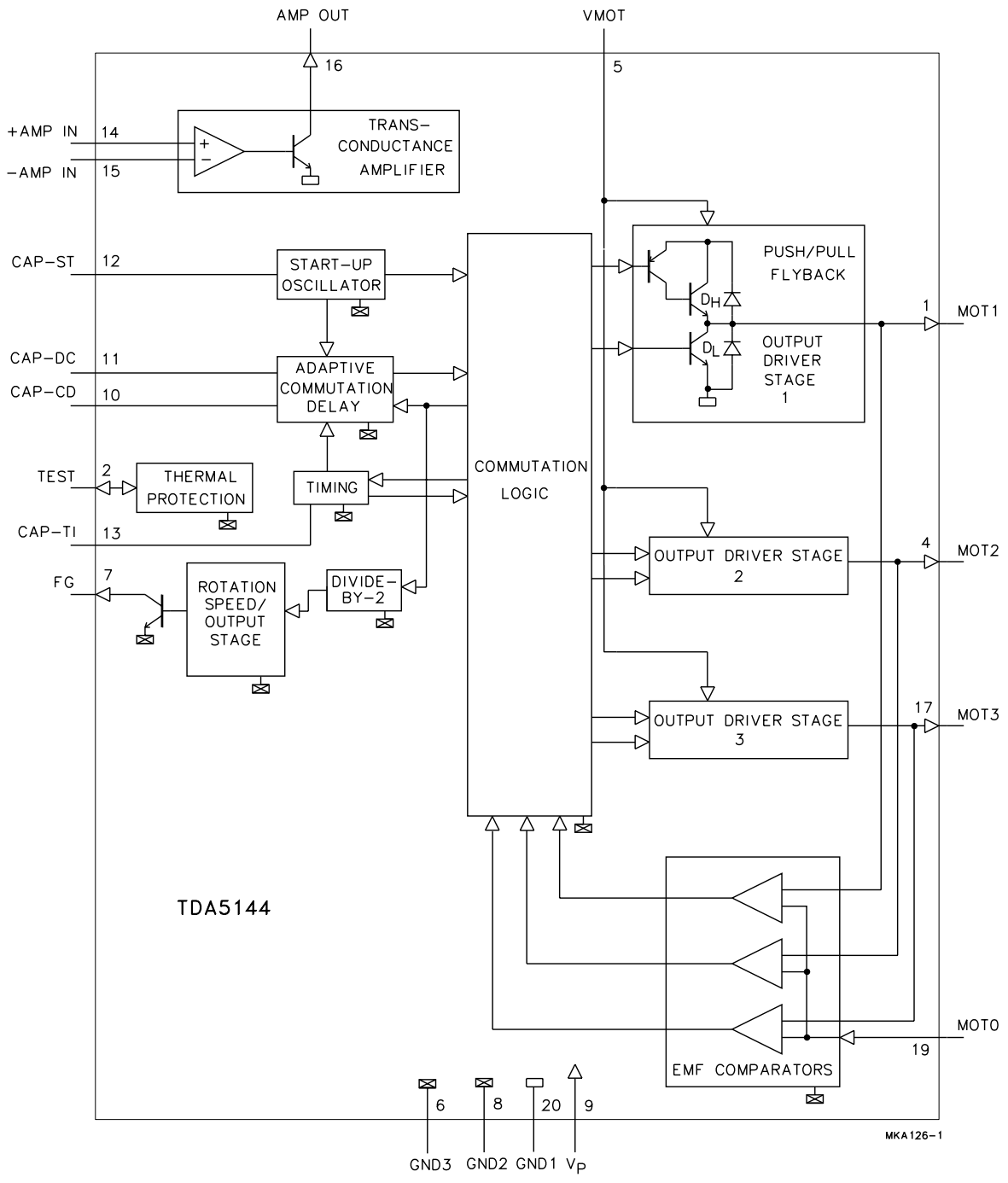

Fig.1 Block diagram (SOT163-1; SO20L).

PINNING

SYMBOL	PIN		DESCRIPTION
	SO20	SO28	
MOT1	1	1 and 2	driver output 1
TEST	2	3	test input/output
n.c.	3	4	not connected
MOT2	4	5 and 6	driver output 2
n.c.	–	7	not connected
VMOT	5	8 and 9	input voltage for the output driver stages
GND3	6	10	ground supply; must be connected
FG	7	11	frequency generator: output of the rotation speed (open collector digital output)
GND2	8	12	ground supply return for control circuits
V_P	9	13	supply voltage
CAP-CD	10	14	external capacitor connection for adaptive communication delay timing
CAP-DC	11	15	external capacitor connection for adaptive communication delay timing copy
CAP-ST	12	16	external capacitor connection for start-up oscillator
CAP-TI	13	17	external capacitor connection for timing
+AMP IN	14	18	non-inverting input of the transconductance amplifier
–AMP IN	15	19	inverting input of the transconductance amplifier
AMP OUT	16	20	transconductance amplifier output (open collector)
n.c.	–	21 and 22	not connected
MOT3	17	23 and 24	driver output 3
n.c.	18	25	not connected
MOT0	19	26	input from the star point of the motor coils
GND1	20	27 and 28	ground (0 V) motor supply return for output stages

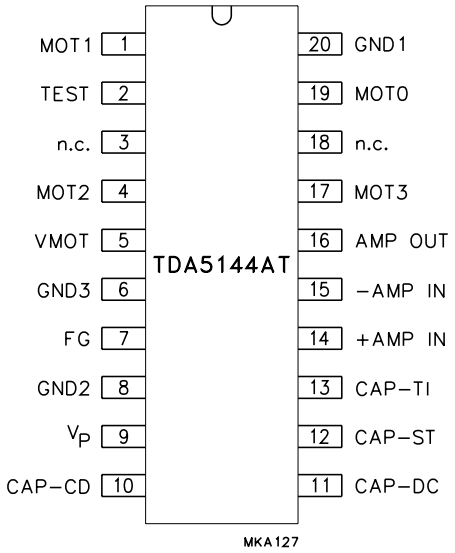

Fig.2 Pin configuration (SOT163-1; SO20L).

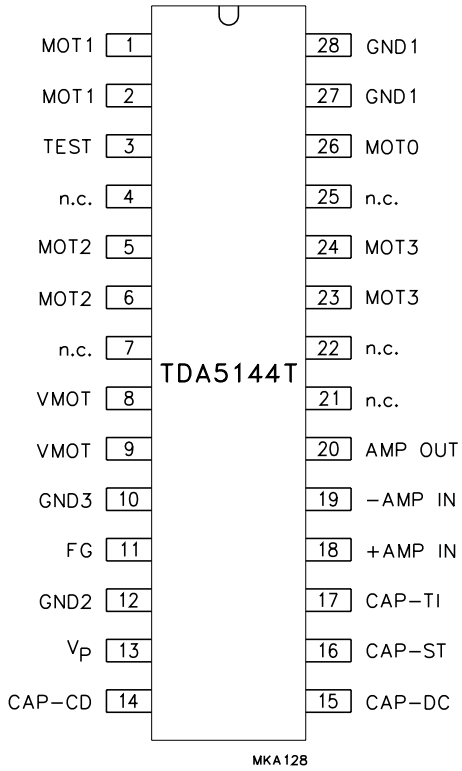

Fig.3 Pin configuration (SOT136-1; SO28L).

FUNCTIONAL DESCRIPTION

The TDA5144 offers a sensorless three phase motor drive function. It is unique in its combination of sensorless motor drive and full-wave drive. The TDA5144 offers protected outputs capable of handling high currents and can be used with star or delta connected motors. It can easily be adapted for different motors and applications. The TDA5144 offers the following features:

- Sensorless commutation by using the motor EMF.
- Built-in start-up circuit.
- Optimum commutation, independent of motor type or motor loading.
- Built-in flyback diodes.
- Three phase full-wave drive.
- High output current (2.0 A).
- Outputs protected by current limiting and thermal protection of each output transistor.
- Low current consumption by adaptive base-drive.
- Soft-switching pulse output for low radiation.
- Accurate frequency generator (FG) by using the motor EMF.
- Uncommitted operational transconductance amplifier (OTA), with a high output current, for use as a control amplifier.

LIMITING VALUES

In accordance with the Absolute Maximum Rating System (IEC 134).

SYMBOL	PARAMETER	CONDITIONS	MIN.	MAX.	UNIT
V_P	supply voltage		–	18	V
V_I	input voltage; all pins except VMOT	V_I < 18 V	–0.3	V_P + 0.5	V
V_{VMOT}	VMOT input voltage		–0.5	17	V
V_O	output voltage				
	AMP OUT and FG		GND	V_P	V
	MOT0, MOT1, MOT2 and MOT3		–1	V_{VMOT} + V_{DHF}	V
V_I	input voltage CAP-ST, CAP-TI, CAP-CD and CAP-DC		–	2.5	V
T_{stg}	storage temperature		–55	+150	°C
T_{amb}	operating ambient temperature		0	+70	°C
P_{tot}	total power dissipation	see Figs 4 and 5	–	–	W
V_{es}	electrostatic handling	see Chapter “Handling”	–	500	V

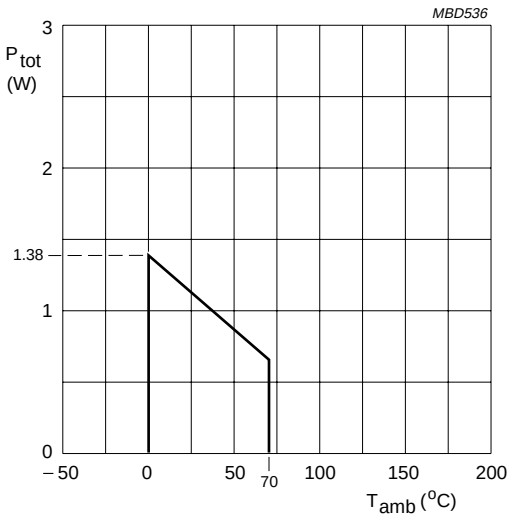

Fig.4 Power derating curve (SOT163-1; SO20L).

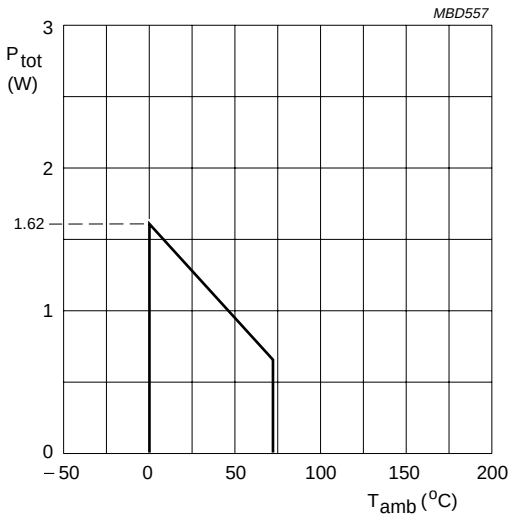

Fig.5 Power derating curve (SOT136-1; SO28L).

HANDLING

Every pin withstands the ESD test according to *“MIL-STD-883C class 2”*. Method 3015 (HBM 1500 Ω, 100 pF) 3 pulses + and 3 pulses – on each pin referenced to ground.

CHARACTERISTICS

V_P = 14.5 V; T_{amb} = 25 °C; unless otherwise specified.

SYMBOL	PARAMETER	CONDITIONS	MIN.	TYP.	MAX.	UNIT
Supply						
V_P	supply voltage	note 1	4	–	18	V
I_P	supply current	note 2	–	6.3	7.2	mA
V_{VMOT}	input voltage to the output driver stages	see Fig.1	1.7	–	16	V
Thermal protection						
T_{SD}	local temperature at temperature sensor causing shut-down		130	140	150	°C
ΔT	reduction in temperature before switch-on	after shut-down	–	T_{SD} – 30	–	K
MOT0; centre tap						
V_I	input voltage		–0.5	–	V_{VMOT}	V
I_I	input bias current	0.5 V < V_I < V_{VMOT} – 1.5 V	–10	–	0	µA
V_{CSW}	comparator switching level	note 3	±20	±25	±30	mV
ΔV_{CSW}	variation in comparator switching levels		–3	0	+3	mV
V_{hys}	comparator input hysteresis		–	75	–	µV
MOT1, MOT2 and MOT3						
V_{DO}	drop-out output voltage	I_O = 100 mA	–	0.9	1.05	V
		I_O = 1000 mA	–	1.6	1.85	V
ΔV_{OL}	variation in saturation voltage between lower transistors	I_O = 100 mA	–	–	180	mV
ΔV_{OH}	variation in saturation voltage between upper transistors	I_O = –100 mA	–	–	180	mV
I_{LIM}	current limiting	V_{VMOT} = 10 V; R_O = 1.2 Ω	1.8	2.0	2.5	A
t_r	rise time switching output	V_{VMOT} = 15 V; see Fig.6	5	10	15	µs
t_f	fall time switching output	V_{VMOT} = 15 V; see Fig.6	10	15	20	µs
V_{DHF}	diode forward voltage (diode D_H)	I_O = –500 mA; notes 4 and 5; see Fig.1	–	–	1.5	V
V_{DLF}	diode forward voltage (diode D_L)	I_O = 500 mA; notes 4 and 5; see Fig.1	–1.5	–	–	V
I_{DM}	peak diode current	note 5	–	–	2.5	A
+AMP IN and –AMP IN						
V_I	input voltage		–0.3	–	V_P – 1.7	V
	differential mode voltage without 'latch-up'		–	–	±V_P	V
I_b	input bias current		–	–	650	nA
C_I	input capacitance		–	4	–	pF
V_{offset}	input offset voltage		–	–	10	mV

SYMBOL	PARAMETER	CONDITIONS	MIN.	TYP.	MAX.	UNIT
AMP OUT (open collector)						
I_{sink}	output sink current		40	–	–	mA
V_{sat}	saturation voltage	I_I = 40 mA	–	1.5	2.1	V
V_O	output voltage		–0.5	–	+18	V
SR	slew rate	R_L = 330 Ω; C_L = 50 pF	–	60	–	mA/µs
G_{tr}	transfer gain		0.3	–	–	S
FG (open collector)						
V_{OL}	LOW level output voltage	I_O = 1.6 mA	–	–	0.4	V
$V_{OH(max)}$	maximum HIGH level output voltage		V_P	–	–	V
t_{THL}	HIGH-to-LOW transition time	C_L = 50 pF; R_L = 10 kΩ	–	0.5	–	µs
	ratio of FG frequency and commutation frequency		–	1 : 2	–	
δ	duty factor		–	50	–	%
CAP-ST						
I_{sink}	output sink current		1.5	2.0	2.5	µA
I_{source}	output source current		–2.5	–2.0	–1.5	µA
V_{SWL}	LOW level switching voltage		–	0.20	–	V
V_{SWH}	HIGH level switching voltage		–	2.20	–	V
CAP-TI						
I_{sink}	output sink current		–	28	–	µA
I_{source}	output source current	0.2 V < V_{CAP-TI} < 0.3 V	–	–57	–	µA
		0.3 V < V_{CAP-TI} < 2.2 V	–	–5	–	µA
V_{SWL}	LOW level switching voltage		–	50	–	mV
V_{SWM}	MIDDLE level switching voltage		–	0.30	–	V
V_{SWH}	HIGH level switching voltage		–	2.20	–	V
CAP-CD						
I_{sink}	output sink current		10.6	16.2	22	µA
I_{source}	output source current		–5.3	–8.1	–11	µA
I_{sink}/I_{source}	ratio of sink to source current		1.85	2.05	2.25	
V_{IL}	LOW level input voltage		800	875	900	mV
V_{IH}	HIGH level input voltage		2.3	2.4	2.55	V
CAP-DC						
I_{sink}	output sink current		10.1	15.5	20.9	µA
I_{source}	output source current		–20.9	–15.5	–10.1	µA
I_{sink}/I_{source}	ratio of sink to source current		0.9	1.025	1.15	
V_{IL}	LOW level input voltage		800	875	900	mV
V_{IH}	HIGH level input voltage		2.3	2.4	2.55	V

Notes to the characteristics

1. An unstabilized supply can be used.
2. $V_{VMOT} = V_P$, all other inputs at 0 V; all outputs at V_P; $I_O = 0$ mA.
3. Switching levels with respect to MOT1, MOT2 and MOT3.
4. Drivers are in the high-impedance OFF-state.
5. The outputs are short-circuit protected by limiting the current and the IC temperature.

Fig.6 Output transition time measurement.

APPLICATION INFORMATION

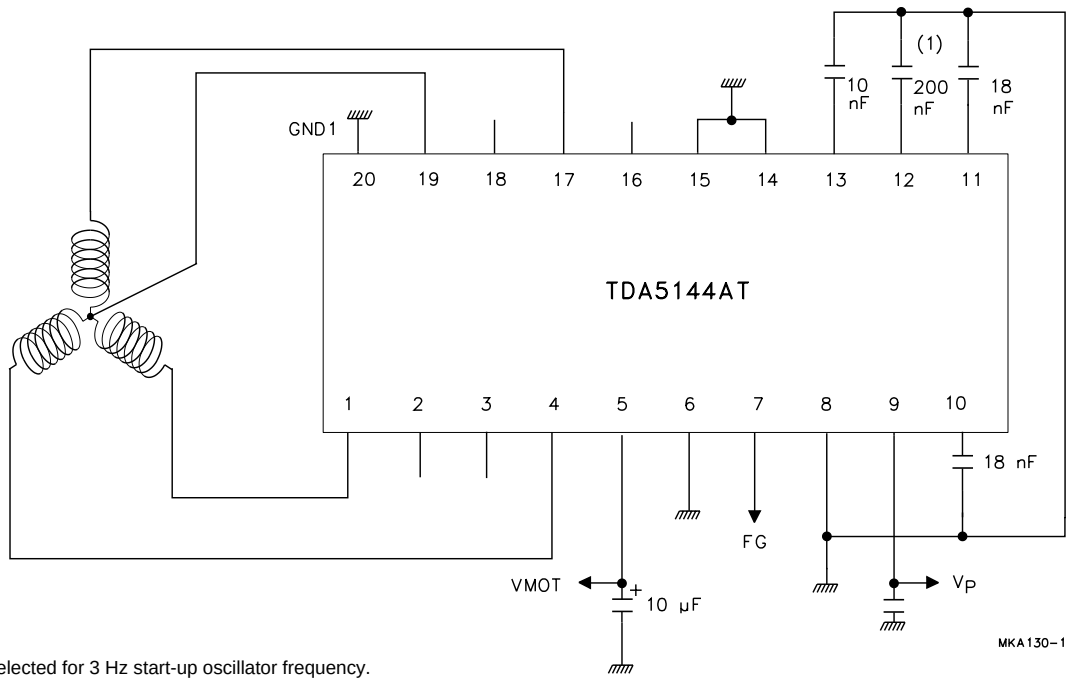

(1) Value selected for 3 Hz start-up oscillator frequency.

Fig.7 Application diagram without use of the operational transconductance amplifier (OTA).

Introduction (see Fig.8)

Full-wave driving of a three phase motor requires three push-pull output stages. In each of the six possible states two outputs are active, one sourcing (H) and one sinking (L). The third output presents a high impedance (Z) to the motor, which enables measurement of the motor back-EMF in the corresponding motor coil by the EMF comparator at each output. The commutation logic is responsible for control of the output transistors and selection of the correct EMF comparator. In Table 1 the sequence of the six possible states of the outputs has been depicted.

Table 1 Output states.

STATE	MOT1[(1)]	MOT2[(1)]	MOT3[(1)]
1	Z	L	H
2	H	L	Z
3	H	Z	L
4	Z	H	L
5	L	H	Z
6	L	Z	H

Note

1. H = HIGH state;
   L = LOW state;
   Z = high-impedance OFF-state.

The zero-crossing in the motor EMF (detected by the comparator selected by the commutation logic) is used to calculate the correct moment for the next commutation, that is, the change to the next output state. The delay is calculated (depending on the motor loading) by the adaptive commutation delay block.

Because of high inductive loading the output stages contain flyback diodes. The output stages are also protected by a current limiting circuit and by thermal protection of the six output transistors.

The detected zero-crossings are used to provide speed information. The information has been made available on the FG output pin. This is an open collector output and provides an output signal with a frequency that is half the commutation frequency.

The system will only function when the EMF voltage from the motor is present. Therefore, a start oscillator is provided that will generate commutation pulses when no zero-crossings in the motor voltage are available.

A timing function is incorporated into the device for internal timing and for timing of the reverse rotation detection.

The TDA5144 also contains an uncommitted transconductance amplifier (OTA) that can be used as a control amplifier. The output is capable of directly driving an external power transistor.

The TDA5144 is designed for systems with low current consumption: use of I^2L logic, adaptive base drive for the output transistors (patented).

Adjustments

The system has been designed in such a way that the tolerances of the application components are not critical. However, the approximate values of the following components must still be determined:

- The start capacitor; this determines the frequency of the start oscillator.
- The two capacitors in the adaptive commutation delay circuit; these are important in determining the optimum moment for commutation, depending on the type and loading of the motor.
- The timing capacitor; this provides the system with its timing signals.

THE START CAPACITOR (CAP-ST)

This capacitor determines the frequency of the start oscillator. It is charged and discharged, with a current of 2 μA, from 0.05 to 2.2 V and back to 0.05 V. The time taken to complete one cycle is given by:
$t_{start} = (2.15 \times C)$ s (with C in μF)

The start oscillator is reset by a commutation pulse and so is only active when the system is in the start-up mode. A pulse from the start oscillator will cause the outputs to change to the next state (torque in the motor). If the movement of the motor generates enough EMF the TDA5144 will run the motor. If the amount of EMF generated is insufficient, then the motor will move one step only and will oscillate in its new position. The amplitude of the oscillation must decrease sufficiently before the arrival of the next start pulse, to prevent the pulse arriving during the wrong phase of the oscillation.

The oscillation of the motor is given by:

$$f_{osc} = \frac{1}{2\pi\sqrt{\frac{K_t \times I \times p}{J}}}$$

where:

K_t = torque constant (N.m/A)

I = current (A)

p = number of magnetic pole-pairs

J = inertia J (kg.m^2)

Example: J = 72 × 10^{-6} kg.m^2, K = 25 × 10^{-3} N.m/A, p = 6 and I = 0.5 A; this gives f_{osc} = 5 Hz. If the damping is high then a start frequency of 2 Hz can be chosen or t = 500 ms, thus C = 0.5/2 = 0.25 μF (choose 220 nF).

THE ADAPTIVE COMMUTATION DELAY (CAP-CD AND CAP-DC)

In this circuit capacitor CAP-CD is charged during one commutation period, with an interruption of the charging current during the diode pulse. During the next commutation period this capacitor (CAP-CD) is discharged at twice the charging current. The charging current is 8.1 μA and the discharging current 16.2 μA; the voltage range is from 0.9 to 2.2 V. The voltage must stay within this range at the lowest commutation frequency of interest, f_{C1}:

$$C = \frac{8.1 \times 10^{-6}}{f \times 1.3} = \frac{6231}{f_{C1}} \text{ (C in nF)}$$

If the frequency is lower, then a constant commutation delay after the zero-crossing is generated by the discharge from 2.2 to 0.9 V at 16.2 μA;
maximum delay = (0.076 × C) ms (with C in nF).

Example: nominal commutation frequency = 900 Hz and the lowest usable frequency = 400 Hz; so:

$$\text{CAP-CD} = \frac{6231}{400} = 15.6 \text{ (choose 18 nF)}$$

The other capacitor, CAP-DC, is used to repeat the same delay by charging and discharging with 15.5 μA. The same value can be chosen as for CAP-CD. Figure 9 illustrates typical voltage waveforms.

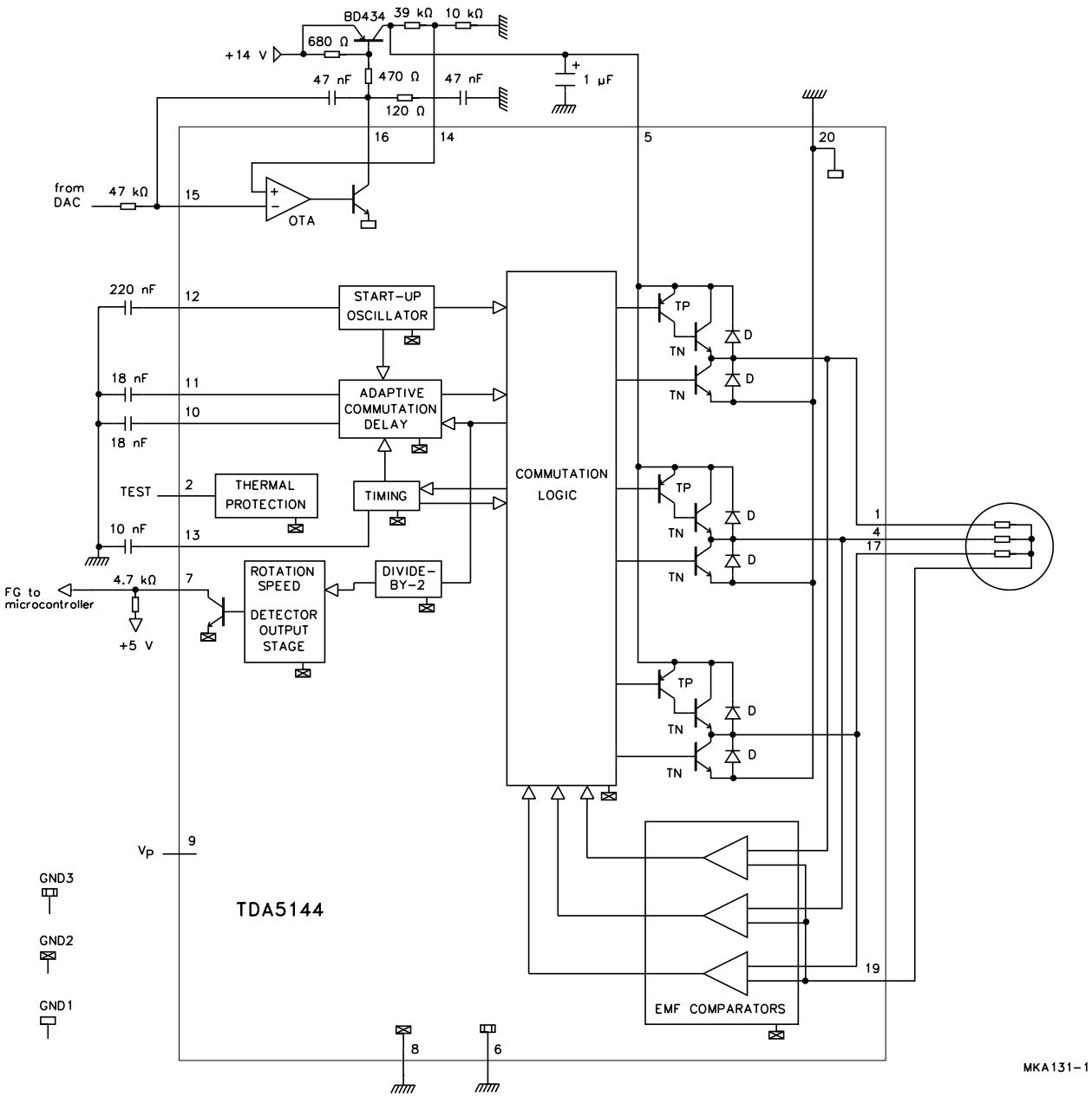

Fig.8 Typical application of the TDA5144 as a scanner driver, with use of OTA.

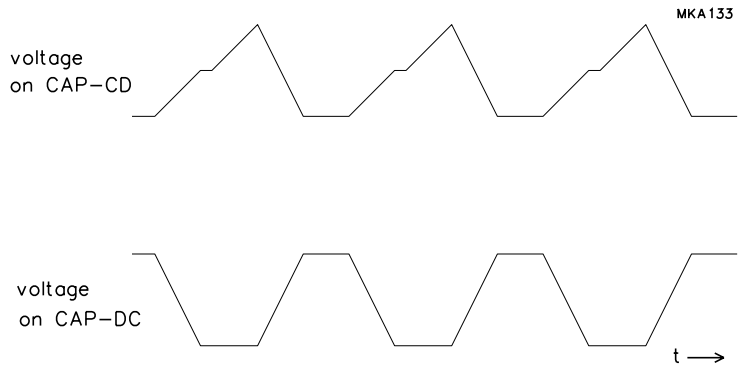

Fig.9 CAP-CD and CAP-DC typical voltage waveforms in normal running mode.

THE TIMING CAPACITOR (CAP-TI)

Capacitor CAP-TI is used for timing the successive steps within one commutation period; these steps include some internal delays.

The most important function is the watchdog time in which the motor EMF has to recover from a negative diode-pulse back to a positive EMF voltage (or vice versa). A watchdog timer is a guarding function that only becomes active when the expected event does not occur within a predetermined time.

The EMF usually recovers within a short time if the motor is running normally (<<ms). However, if the motor is motionless or rotating in the reverse direction, then the time can be longer (>>ms).

A watchdog time must be chosen so that it is long enough for a motor without EMF (still) and eddy currents that may stretch the voltage in a motor winding; however, it must be short enough to detect reverse rotation. If the watchdog time is made too long, then the motor may run in the wrong direction (with little torque).

The capacitor is charged, with a current of 57 μA, from 0.2 to 0.3 V. Above this level it is charged, with a current of 5 μA, up to 2.2 V only if the selected motor EMF remains in the wrong polarity (watchdog function). At the end, or, if the motor voltage becomes positive, the capacitor is discharged with a current of 28 μA. The watchdog time is the time taken to charge the capacitor, with a current of 5 μA, from 0.3 to 2.2 V.

To ensure that the internal delays are covered CAP-TI must have a minimum value of 2 nF. For the watchdog function a value for CAP-TI of 10 nF is recommended.

To ensure a good start-up and commutation, care must be taken that no oscillations occur at the trailing edge of the flyback pulse. Snubber networks at the outputs should be critically damped.

Typical voltage waveforms are illustrated by Fig.10.

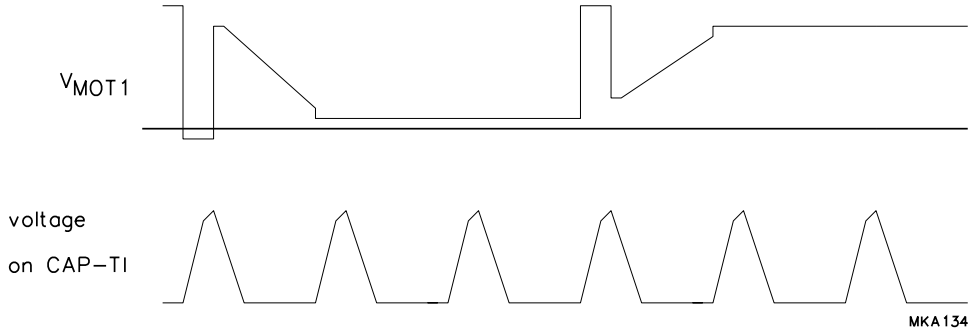

If the chosen value of CAP-TI is too small oscillations can occur in certain positions of a blocked rotor. If the chosen value is too large, then it is possible that the motor may run in the reverse direction (synchronously with little torque).

Fig.10 Typical CAP-TI and V_{MOT1} voltage waveforms in normal running mode.

Other design aspects

There are other design aspects concerning the application of the TDA5144 besides the commutation function. They are:

- Generation of the tacho signal FG
- General purpose operational transconductance amplifier (OTA)
- Possibilities of motor control
- Reliability.

FG SIGNAL

The FG signal is generated in the TDA5144 by using the zero-crossing of the motor EMF from the three motor windings. Every zero-crossing in a (star connected) motor winding is used to toggle the FG output signal. The FG frequency is therefore half the commutation frequency. All transitions indicate the detection of a zero-crossing.

The accuracy of the FG output signal depends on the symmetry of the motor's electromagnetic construction, which also effects the satisfactory functioning of the motor itself.

Example: a 3-phase motor with 6 magnetic pole-pairs at 1500 rpm and with a full-wave drive has a commutation frequency of $25 \times 6 \times 6$ = 900 Hz, and generates a tacho signal of 450 Hz.

THE OPERATIONAL TRANSCONDUCTANCE AMPLIFIER (OTA)

The OTA is an uncommitted amplifier with a high output current (40 mA) that can be used as a control amplifier. The common mode input range includes ground (GND) and rises to V_P – 1.7 V. The high sink current enables the OTA to drive a power transistor directly in an analog control amplifier.

Although the gain is not extremely high (0.3 S), care must be taken with the stability of the circuit if the OTA is used as a linear amplifier as no frequency compensation has been provided.

The convention for the inputs (inverting or not) is the same as for a normal operational amplifier: with a resistor (as load) connected from the output (AMP OUT) to the positive supply, a positive-going voltage is found when the non-inverting input (+AMP IN) is positive with respect to the inverting input (–AMP IN). Confusion is possible because a ‘plus’ input causes less current, and so a positive voltage.

MOTOR CONTROL

DC motors can be controlled in an analog manner using the OTA.

For the analog control an external transistor is required. The OTA can supply the base current for this transistor and act as a control amplifier (see Fig.8).

RELIABILITY

It is necessary to protect high current circuits and the output stages are protected in two ways:

- Current limiting of the ‘lower’ output transistors. The ‘upper’ output transistors use the same base current as the conducting ‘lower’ transistor (+15%). This means that the current to and from the output stages is limited.
- Thermal protection of the six output transistors is achieved by each transistor having a thermal sensor that is active when the transistor is switched on. The transistors are switched off when the local temperature becomes too high.

It is possible, that when braking, the motor voltage (via the flyback diodes and the impedance on VMOT) may cause higher currents than allowed (>0.6 A). These currents must be limited externally.

PACKAGE OUTLINES

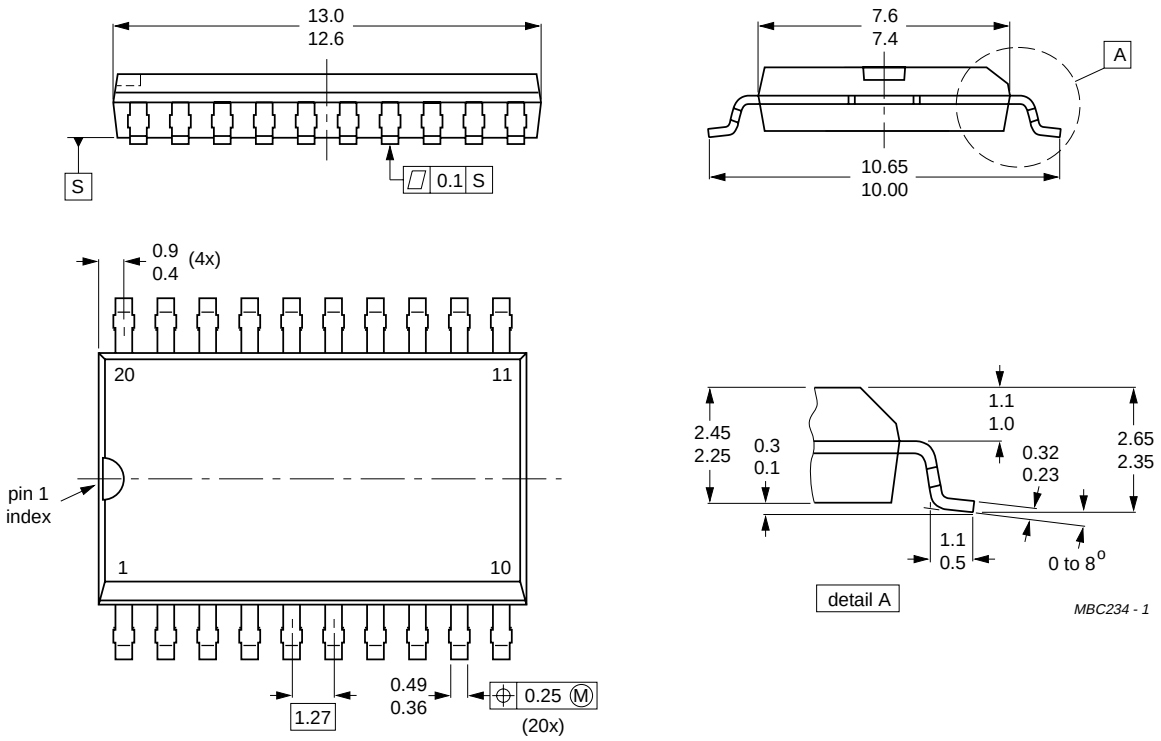

Dimensions in mm.

Fig.11 Plastic small outline package; 20 leads; large body (SOT163-1; SO20L).

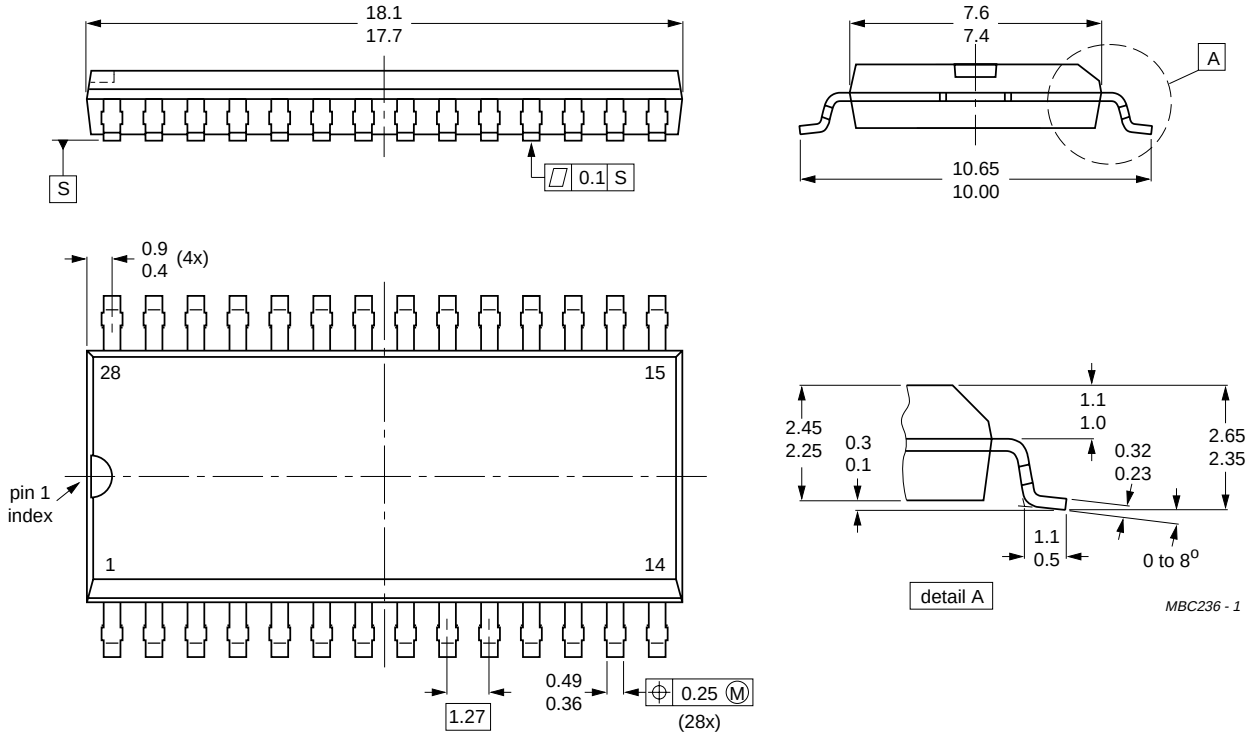

Dimensions in mm.

Fig.12 Plastic small outline package; 28 leads; large body (SOT136-1; SO28L).

SOLDERING

Plastic small-outline packages

BY WAVE

During placement and before soldering, the component must be fixed with a droplet of adhesive. After curing the adhesive, the component can be soldered. The adhesive can be applied by screen printing, pin transfer or syringe dispensing.

Maximum permissible solder temperature is 260 °C, and maximum duration of package immersion in solder bath is 10 s, if allowed to cool to less than 150 °C within 6 s. Typical dwell time is 4 s at 250 °C.

A modified wave soldering technique is recommended using two solder waves (dual-wave), in which a turbulent wave with high upward pressure is followed by a smooth laminar wave. Using a mildly-activated flux eliminates the need for removal of corrosive residues in most applications.

BY SOLDER PASTE REFLOW

Reflow soldering requires the solder paste (a suspension of fine solder particles, flux and binding agent) to be applied to the substrate by screen printing, stencilling or pressure-syringe dispensing before device placement.

Several techniques exist for reflowing; for example, thermal conduction by heated belt, infrared, and vapour-phase reflow. Dwell times vary between 50 and 300 s according to method. Typical reflow temperatures range from 215 to 250 °C.

Preheating is necessary to dry the paste and evaporate the binding agent. Preheating duration: 45 min at 45 °C.

REPAIRING SOLDERED JOINTS (BY HAND-HELD SOLDERING IRON OR PULSE-HEATED SOLDER TOOL)

Fix the component by first soldering two, diagonally opposite, end pins. Apply the heating tool to the flat part of the pin only. Contact time must be limited to 10 s at up to 300 °C. When using proper tools, all other pins can be soldered in one operation within 2 to 5 s at between 270 and 320 °C. (Pulse-heated soldering is not recommended for SO packages.)

For pulse-heated solder tool (resistance) soldering of VSO packages, solder is applied to the substrate by dipping or by an extra thick tin/lead plating before package placement.

DEFINITIONS

Data sheet status	
Objective specification	This data sheet contains target or goal specifications for product development.
Preliminary specification	This data sheet contains preliminary data; supplementary data may be published later.
Product specification	This data sheet contains final product specifications.
Limiting values	
Limiting values given are in accordance with the Absolute Maximum Rating System (IEC 134). Stress above one or more of the limiting values may cause permanent damage to the device. These are stress ratings only and operation of the device at these or at any other conditions above those given in the Characteristics sections of the specification is not implied. Exposure to limiting values for extended periods may affect device reliability.	
Application information	
Where application information is given, it is advisory and does not form part of the specification.	

LIFE SUPPORT APPLICATIONS

These products are not designed for use in life support appliances, devices, or systems where malfunction of these products can reasonably be expected to result in personal injury. Philips customers using or selling these products for use in such applications do so at their own risk and agree to fully indemnify Philips for any damages resulting from such improper use or sale.

NOTES

Philips Semiconductors – a worldwide company

Argentina: IEROD, Av. Juramento 1992 - 14.b, (1428)
BUENOS AIRES, Tel. (541)786 7633, Fax. (541)786 9367

Australia: 34 Waterloo Road, NORTH RYDE, NSW 2113,
Tel. (02)805 4455, Fax. (02)805 4466

Austria: Triester Str. 64, A-1101 WIEN, P.O. Box 213,
Tel. (01)60 101-1236, Fax. (01)60 101-1211

Belgium: Postbus 90050, 5600 PB EINDHOVEN, The Netherlands,
Tel. (31)40 783 749, Fax. (31)40 788 399

Brazil: Rua do Rocio 220 - 5th floor, Suite 51,
CEP: 04552-903-SÃO PAULO-SP, Brazil.
P.O. Box 7383 (01064-970).
Tel. (011)821-2327, Fax. (011)829-1849

Canada: INTEGRATED CIRCUITS:
Tel. (800)234-7381, Fax. (708)296-8556
DISCRETE SEMICONDUCTORS: 601 Milner Ave,
SCARBOROUGH, ONTARIO, M1B 1M8,
Tel. (0416)292 5161 ext. 2336, Fax. (0416)292 4477

Chile: Av. Santa Maria 0760, SANTIAGO,
Tel. (02)773 816, Fax. (02)777 6730

Colombia: IPRELENSO LTDA, Carrera 21 No. 56-17,
77621 BOGOTA, Tel. (571)249 7624/(571)217 4609,
Fax. (571)217 4549

Denmark: Prags Boulevard 80, PB 1919, DK-2300 COPENHAGEN S,
Tel. (032)88 2636, Fax. (031)57 1949

Finland: Sinikalliontie 3, FIN-02630 ESPOO,
Tel. (9)0-50261, Fax. (9)0-520971

France: 4 Rue du Port-aux-Vins, BP317,
92156 SURESNES Cedex,
Tel. (01)4099 6161, Fax. (01)4099 6427

Germany: PHILIPS COMPONENTS UB der Philips G.m.b.H.,
P.O. Box 10 63 23, 20043 HAMBURG,
Tel. (040)3296-0, Fax. (040)3296 213.

Greece: No. 15, 25th March Street, GR 17778 TAVROS,
Tel. (01)4894 339/4894 911, Fax. (01)4814 240

Hong Kong: PHILIPS HONG KONG Ltd., Components Div.,
6/F Philips Ind. Bldg., 24-28 Kung Yip St., KWAI CHUNG, N.T.,
Tel. (852)424 5121, Fax. (852)428 6729

India: Philips INDIA Ltd, Components Dept,
Shivsagar Estate, A Block ,
Dr. Annie Besant Rd. Worli, Bombay 400 018
Tel. (022)4938 541, Fax. (022)4938 722

Indonesia: Philips House, Jalan H.R. Rasuna Said Kav. 3-4,
P.O. Box 4252, JAKARTA 12950,
Tel. (021)5201 122, Fax. (021)5205 189

Ireland: Newstead, Clonskeagh, DUBLIN 14,
Tel. (01)640 000, Fax. (01)640 200

Italy: PHILIPS COMPONENTS S.r.l.,
Viale F. Testi, 327, 20162 MILANO,
Tel. (02)6752.3302, Fax. (02)6752 3300.

Japan: Philips Bldg 13-37, Kohnan 2-chome, Minato-ku, TOKYO 108,
Tel. (03)3740 5028, Fax. (03)3740 0580

Korea: (Republic of) Philips House, 260-199 Itaewon-dong,
Yongsan-ku, SEOUL, Tel. (02)794-5011, Fax. (02)798-8022

Malaysia: No. 76 Jalan Universiti, 46200 PETALING JAYA,
SELANGOR, Tel. (03)750 5214, Fax. (03)757 4880

Mexico: Philips Components, 5900 Gateway East, Suite 200,
EL PASO, TX 79905, Tel. 9-5(800)234-7381, Fax. (708)296-8556

Netherlands: Postbus 90050, 5600 PB EINDHOVEN, Bldg. VB
Tel. (040)783749, Fax. (040)788399

New Zealand: 2 Wagener Place, C.P.O. Box 1041, AUCKLAND,
Tel. (09)849-4160, Fax. (09)849-7811

Norway: Box 1, Manglerud 0612, OSLO,
Tel. (022)74 8000, Fax. (022)74 8341

Pakistan: Philips Electrical Industries of Pakistan Ltd.,
Exchange Bldg. ST-2/A, Block 9, KDA Scheme 5, Clifton,
KARACHI 75600, Tel. (021)587 4641-49,
Fax. (021)577035/5874546.

Philippines: PHILIPS SEMICONDUCTORS PHILIPPINES Inc,
106 Valero St. Salcedo Village, P.O. Box 2108 MCC, MAKATI,
Metro MANILA, Tel. (02)810 0161, Fax. (02)817 3474

Portugal: PHILIPS PORTUGUESA, S.A.,
Rua dr. António Loureiro Borges 5, Arquiparque - Miraflores,
Apartado 300, 2795 LINDA-A-VELHA,
Tel. (01)14163160/4163333, Fax. (01)14163174/4163366.

Singapore: Lorong 1, Toa Payoh, SINGAPORE 1231,
Tel. (65)350 2000, Fax. (65)251 6500

South Africa: S.A. PHILIPS Pty Ltd., Components Division,
195-215 Main Road Martindale, 2092 JOHANNESBURG,
P.O. Box 7430 Johannesburg 2000,
Tel. (011)470-5911, Fax. (011)470-5494.

Spain: Balmes 22, 08007 BARCELONA,
Tel. (03)301 6312, Fax. (03)301 42 43

Sweden: Kottbygatan 7, Akalla. S-164 85 STOCKHOLM,
Tel. (0)8-632 2000, Fax. (0)8-632 2745

Switzerland: Allmendstrasse 140, CH-8027 ZÜRICH,
Tel. (01)488 2211, Fax. (01)481 77 30

Taiwan: PHILIPS TAIWAN Ltd., 23-30F, 66, Chung Hsiao West
Road, Sec. 1. Taipeh, Taiwan ROC, P.O. Box 22978,
TAIPEI 100, Tel. (02)388 7666, Fax. (02)382 4382.

Thailand: PHILIPS ELECTRONICS (THAILAND) Ltd.,
209/2 Sanpavuth-Bangna Road Prakanong,
Bangkok 10260, THAILAND,
Tel. (662)398-0141, Fax. (662)398-3319.

Turkey: Talatpasa Cad. No. 5, 80640 GÜLTEPE/ISTANBUL,
Tel. (0212)279 2770, Fax. (0212)269 3094

United Kingdom: Philips Semiconductors Limited, P.O. Box 65,
Philips House, Torrington Place, LONDON, WC1E 7HD,
Tel. (071)436 41 44, Fax. (071)323 03 42

United States: INTEGRATED CIRCUITS:
811 East Arques Avenue, SUNNYVALE, CA 94088-3409,
Tel. (800)234-7381, Fax. (708)296-8556
DISCRETE SEMICONDUCTORS: 2001 West Blue Heron Blvd.,
P.O. Box 10330, RIVIERA BEACH, FLORIDA 33404,
Tel. (800)447-3762 and (407)881-3200, Fax. (407)881-3300

Uruguay: Coronel Mora 433, MONTEVIDEO,
Tel. (02)70-4044, Fax. (02)92 0601

For all other countries apply to: Philips Semiconductors,
International Marketing and Sales, Building BAF-1,
P.O. Box 218, 5600 MD, EINDHOVEN, The Netherlands,
Telex 35000 phtcnl, Fax. +31-40-724825

SCD31 © Philips Electronics N.V. 1994

All rights are reserved. Reproduction in whole or in part is prohibited without the prior written consent of the copyright owner.

The information presented in this document does not form part of any quotation or contract, is believed to be accurate and reliable and may be changed without notice. No liability will be accepted by the publisher for any consequence of its use. Publication thereof does not convey nor imply any license under patent- or other industrial or intellectual property rights.

Printed in The Netherlands

373061/1500/02/pp20 Date of release: June 1994
Document order number: 9397 735 60011

Philips Semiconductors

PHILIPS