查询TDA5330T供应商 捷多邦，专业PCB打样工厂，24小时加急出货

INTEGRATED CIRCUITS

DATA SHEET

TDA5330T
VHF, UHF and Hyperband mixer/oscillator for TV and VCR 3-band tuners

Product specification
File under Integrated Circuits, IC02

January 1988

找PDF 维库一下 pdf.dzsc.com

Philips Semiconductors

PHILIPS

VHF, UHF and Hyperband mixer/oscillator for TV and VCR 3-band tuners

TDA5330T

GENERAL DESCRIPTION

The TDA5330T is a monolithic integrated circuit that performs the band A, band B and band C mixer/oscillator functions in TV and VCR tuners. This device gives the designer the capability to design an economical and physically small 3-band tuner which will be capable of meeting the most stringent requirements e.g. FTZ or FCC. The tuner development time can be drastically reduced by using this device.

Features

- Balanced mixer with a common emitter input for band A
- Amplitude-controlled oscillator for band A
- Balanced mixer with common base input for band B and C
- Balanced oscillator for band B and C
- Local oscillator buffer output for external prescaler
- SAW filter preamplifier with an output impedance of 100 Ω
- Bandgap voltage stabilizer for oscillator stability
- Electronic bandswitch

QUICK REFERENCE DATA

PARAMETER	CONDITIONS	SYMBOL	MIN.	TYP.	MAX.	UNIT
Supply voltage		$V_{19-2,\ 26}$	–	12	–	V
Band A frequency range		f_A	48	–	180	MHz
Band B frequency range		f_B	160	–	470	MHz
Band C frequency range		f_C	430	–	860	MHz
Conversion noise		F	7	–	11	dB
Band A input voltage	1% cross-modulation	V_{24-26}	–	100	–	dBμV
Band B and C input power	1% cross-modulation	P_I	–	–21	–	dBm
Band A voltage gain		G_v	–	24	–	dB
Band B voltage gain		G_v	–	37	–	dB
Band C voltage gain		G_v	–	36	–	dB

PACKAGE OUTLINE

28-lead mini-pack , plastic (SO20; SOT163A); SOT 163-1; 1996 November 28.

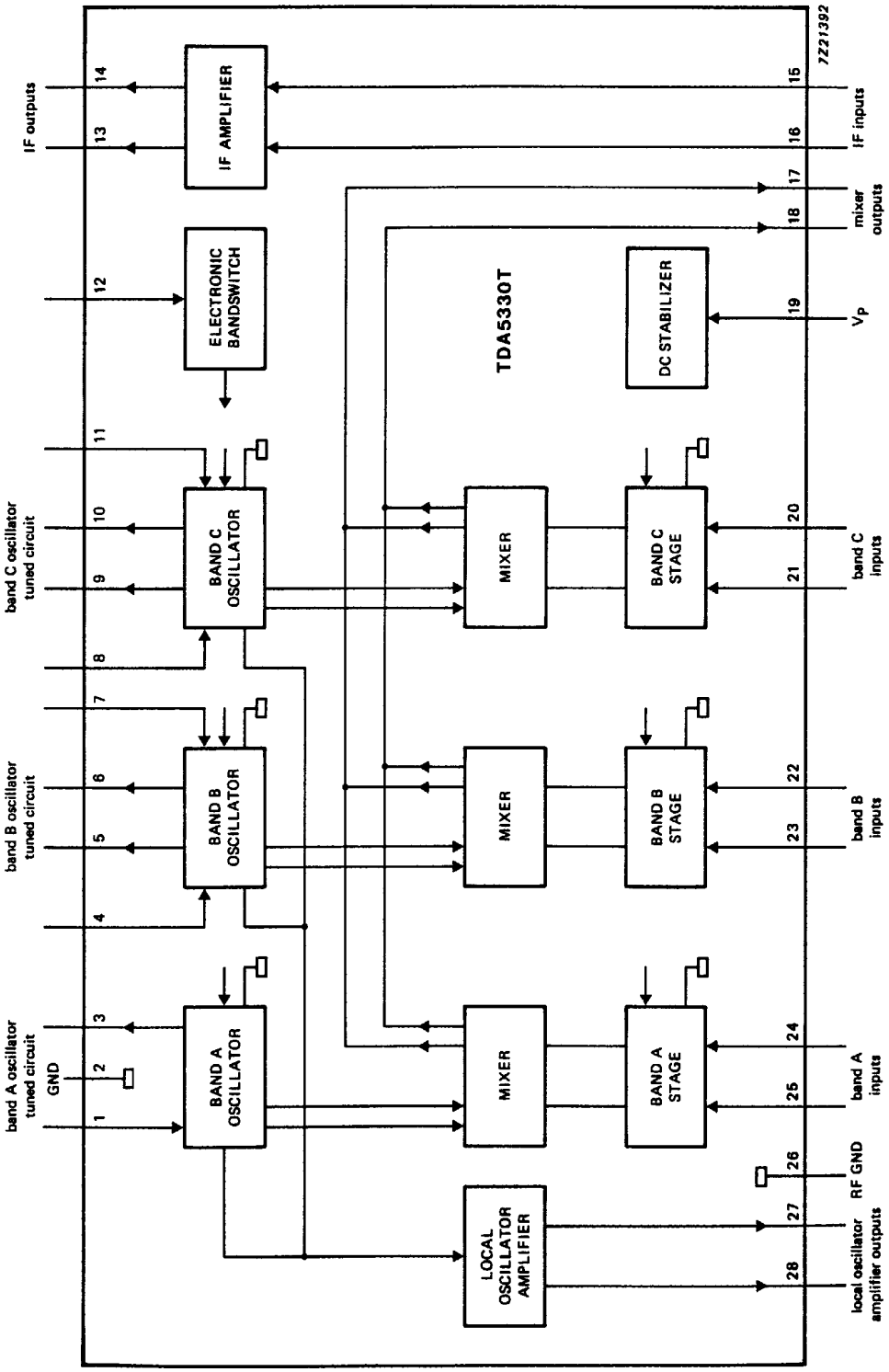

Fig.1 Block diagram.

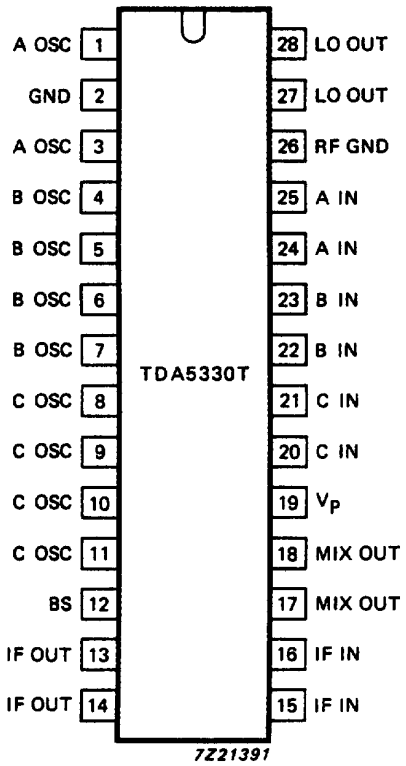

Fig.2 Pinning diagram.

PINNING

1	A OSC	band A oscillator input
2	GND	ground (0 V)
3	A OSC	band A oscillator output
4	B OSC	band B oscillator input
5	B OSC	band B oscillator output
6	B OSC	band B oscillator output
7	B OSC	band B oscillator input
8	C OSC	band C oscillator input
9	C OSC	band C oscillator output
10	C OSC	band C oscillator output
11	C OSC	band C oscillator input
12	BS	electronic bandswitch
13	IF OUT	IF amplifier output
14	IF OUT	IF amplifier output
15	IF IN	IF amplifier input
16	IF IN	IF amplifier input
17	MIX OUT	mixer output
18	MIX OUT	mixer output
19	V_P	positive supply voltage
20	C IN	band C input
21	C IN	band C input
22	B IN	band B input
23	B IN	band B input
24	A IN	band A input
25	A IN	band A input
26	RF GND	ground for RF inputs
27	LO OUT	local oscillator amplifier output
28	LO OUT	local oscillator amplifier output

RATINGS

Limiting values in accordance with the Absolute Maximum System (IEC 134)

PARAMETER	CONDITIONS	SYMBOL	MIN.	MAX.	UNIT
Supply voltage		$V_P = V_{19-2,\,26}$	–0.3	14	V
Switching voltage		V_{12}	0	14	V
Output current of each pin to ground		I_O	–	–10	mA
Maximum short-circuit time (all pins)		t_{SC}	–	10	s
Storage temperature range		T_{stg}	–55	+150	°C
Operating ambient temperature range		T_{amb}	–25	+80	°C

THERMAL RESISTANCE

From junction to ambient in free air $R_{th\ j\text{-}a}$ typ. 75 K/W

CHARACTERISTICS

V_P = 12 V; T_{amb} = 25 °C; unless otherwise specified.

PARAMETER	CONDITIONS	SYMBOL	MIN.	TYP.	MAX.	UNIT
Supply voltage		$V_{19-2, 26}$	10	–	13.2	V
Supply current		I_{19}	–	42	55	mA
Switching voltage;						
band A		V_{12}	0	–	1.1	V
band B		V_{12}	1.6	–	2.4	V
band C		V_{12}	3.0	–	5.0	V
Switching current;						
band C		I_{12}	–	–	50	µA
Band A Mixer (including IF amplifier)	measured using circuit shown in Fig.9					
Frequency range		f_A	48	–	180	MHz
Noise figure	note 1;					
	50 MHz	NF	–	7.5	9	dB
	180 MHz	NF	–	9	10	dB
Optimum source						
conductance	50 MHz	G_{24-26}	–	0.5	–	mS
	180 MHz	G_{24-26}	–	1.1	–	mS
Input admittance	see Fig.9					
Input capacitance	50 - 180 MHz	C_{24-26}	–	2	–	pF
Input voltage	1% cross-modulation; in channel	V_{24-26}	97	100	–	dBµV
Input voltage	10 kHz pulling; in channel	V_{24-26}	100	108	–	dBµV
Voltage gain	20 log (V_{13-14}/V_{24})	G_v	22.5	25.0	27.5	dB
Band A mixer						
Conversion						
transadmittance	Sc = I_{17}/V_{24}					
mixer	= $-I_{18}/V_{24}$	$Sc_{24-17, 18}$	–	3.5	–	mS
Mixer output						
admittance	pins 15 and 16		–	0.1	–	mS
Mixer output						
capacitance		C_{17-18}	–	2	–	pF

PARAMETER	CONDITIONS	SYMBOL	MIN.	TYP.	MAX.	UNIT
Band A oscillator						
Frequency range		f_A	80	–	216	MHz
Frequency shift	ΔV_P = 10%	Δf	–	–	200	kHz
Frequency drift	ΔT = 25 °C	Δf	–	–	400	kHz
Frequency drift	5 s to 15 min after switching on	Δf	–	–	200	kHz
Band B mixer (including IF)	measured using circuit shown in Fig.9					
	measurements using hybrid; note 2					
Frequency range		f_B	160	–	470	MHz
Noise figure	pins 22 and 23;					
	200 MHz	NF	–	8	10	dB
	470 MHz	NF	–	8	10	dB
Input admittance	see Fig.5					
Available input power	1% cross-modulation; in channel; pins 22 and 23;					
	200 MHz	P_{AI}	–24	–21	–	dBm
	470 MHz	P_{AI}	–24	–21	–	dBm
10 kHz pulling	pins 22 and 23; in channel;					
	470 MHz		–	–11	–	dBm
N+5 – 1 MHz pulling	note 3;					
	430 MHz		–	–11	–	dBm
Voltage gain	note 4;					
	200 MHz	G_v	33	36	39	dB
	470 MHz	G_v	33	36	39	dB
Band B oscillator						
Frequency range		f_B	200	–	500	MHz
Frequency shift	ΔV_P = 10%	Δf	–	–	400	kHz
Frequency drift	ΔT = 25 °C	Δf	–	–	500	kHz
Frequency drift	5 s to 15 min after switching on	Δf	–	–	200	kHz

PARAMETER	CONDITIONS	SYMBOL	MIN.	TYP.		MAX.	UNIT
Band C mixer (including IF)	measured using circuit shown in Fig.9; measurements using hybrid; note 2						
Frequency range		f_C	430	–		860	MHz
Noise figure	pins 20 and 21;						
	430 MHz	NF	–	9		11	dB
	860 MHz	NF	–	9		11	dB
Input admittance	see Fig.6						
Available input power	1% cross-modulation in channel; pins 20 and 21;						
	430 MHz	P_{AI}	–25	–21		–	dBm
	860 MHz	P_{AI}	–25	–21		–	dBm
10 kHz pulling	pins 20 and 21; in channel;						
	860 MHz		–	–20		–	dBm
N+5 – 1 MHz pulling	note 3;						
	820 MHz		–42	–35		–	dBm
Voltage gain	note 4;						
	430 MHz	G_v	33	36		39	dB
	860 MHz	G_v	33	36		39	dB
Band C oscillator							
Frequency range		f_C	470	–		900	MHz
Frequency shift	ΔV_b = 10%	Δf	–	–		400	kHz
Frequency drift	ΔT = 25 °C	Δf	–	–		800	kHz
Frequency drift	5 s to 15 min after switching on	Δf	–	–		200	kHz
				mod.	phase		
IF Amplifier	note 5; differentially measured at 36 MHz; see Fig.7						
Input reflection coefficient		S_{11}	–	–0,5	–2.0	–	dB/deg
Reverse transmission coefficient		S_{12}	–	–41	–7	–	dB/deg
Forward transmission coefficient		S_{21}	–	12	160	–	dB/deg
Output reflection coefficient	see Fig.8	S_{22}	–	–9	10	–	dB/deg

PARAMETER	CONDITIONS	SYMBOL	MIN.	TYP.	MAX.	UNIT
LO output						
Output voltage into 50 Ω resistor		V_{27-28}	14	35	100	mV
Spurious signal on LO output with respect to LO output signal	note 6	SRF	–	–	–10	dB
LO signal harmonics with respect to LO signal	measured at 50 Ω	SHD	–	–	–10	dB

Notes

1. Measured with an input circuit for optimum noise. (see Fig.3).
2. The values have been corrected for hybrid and cable losses. The symmetrical output impedance of the circuit is 100 Ω.
3. The input level of a N+5 – 1 MHz signal (just visible).
4. The gain is defined as the transducer gain (measured in Fig.9) plus the voltage transformation ratio of L6 to L7 (6:1, 16 dB).
5. All S parameters are referred to a 50 Ω system.
6. Measured with 50 Ω output impedance on pins 26 and 27 and a RF input signal level of:
   RF level = 1 V at f < 180 MHz
   RF power = 0.5 dBm at 100 MHz < f < 225 MHz
   RF power = –10 dBm at 225 MHz < f < 860 MHz

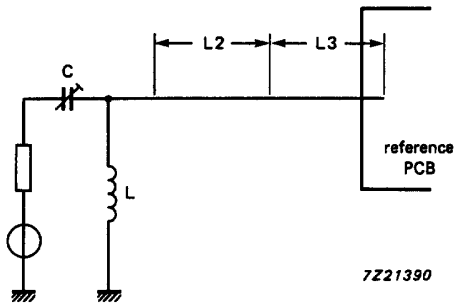

Fig.3 Input circuit for optimum noise.

Table 1 Component values

COMPONENT	F = 50 MHz	F = 180 MHz
L	13 t, ∅ 5.5 mm, wire 0.7 mm	(note 1)
L2	rigid cable, 2.9 cm	(note 1)
L3	rigid cable, 4 cm	(note 1)
C	9.6 pF	(note 1)

Note

1. Value to be fixed.

Table 2 Electrical parameters of the circuit (for appropriate impedance and selectivity)

PARAMETER	F = 50 MHz	F = 180 MHz	UNIT
Insertion loss	0.3	(note 1)	dB
Bandwidth	8	(note 1)	MHz
Image suppression	15	(note 1)	dB
Output impedance (source for IC)	2	(note 1)	kΩ

Note

1. Value to be fixed.

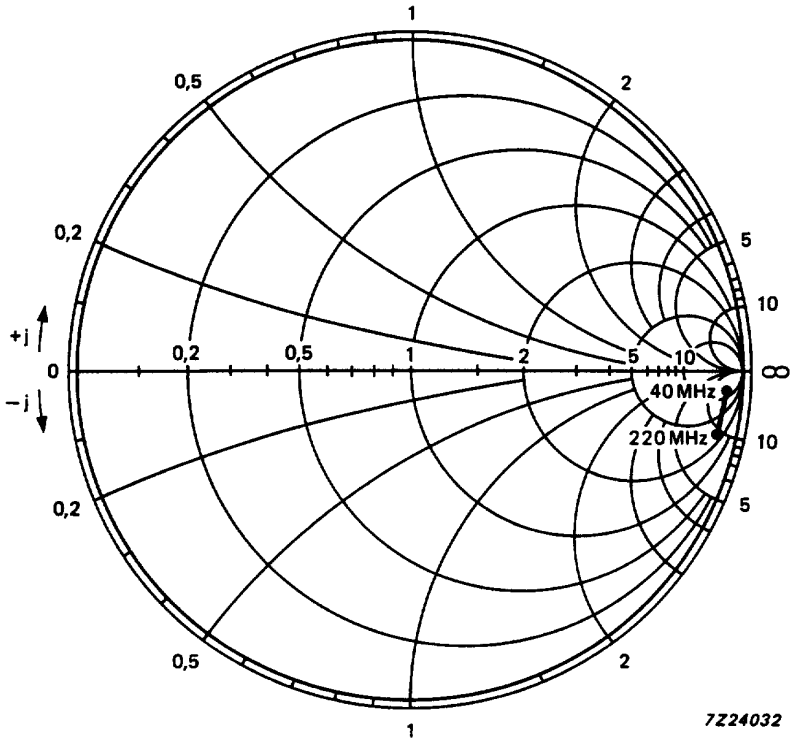

Fig.4 S11 of the band A mixer input (40 to 220 MHz).

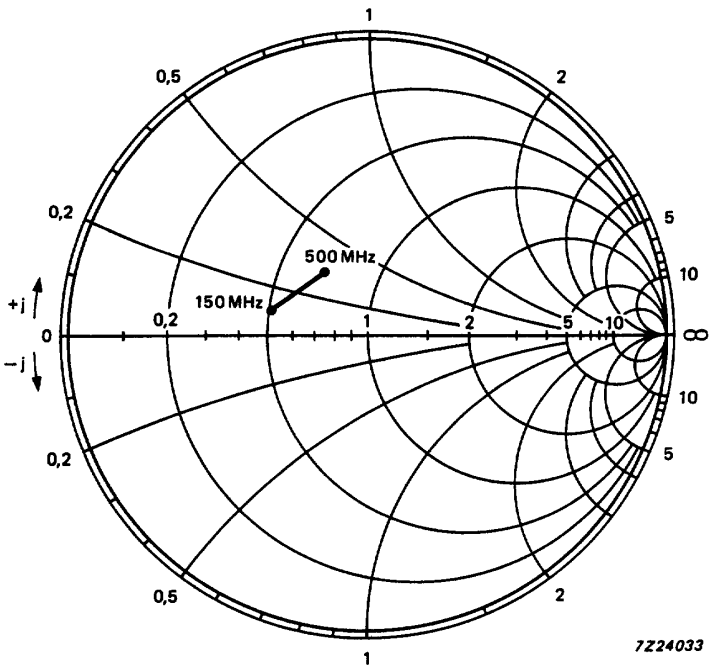

Fig.5 S11 of the band B mixer input (150 to 500 MHz).

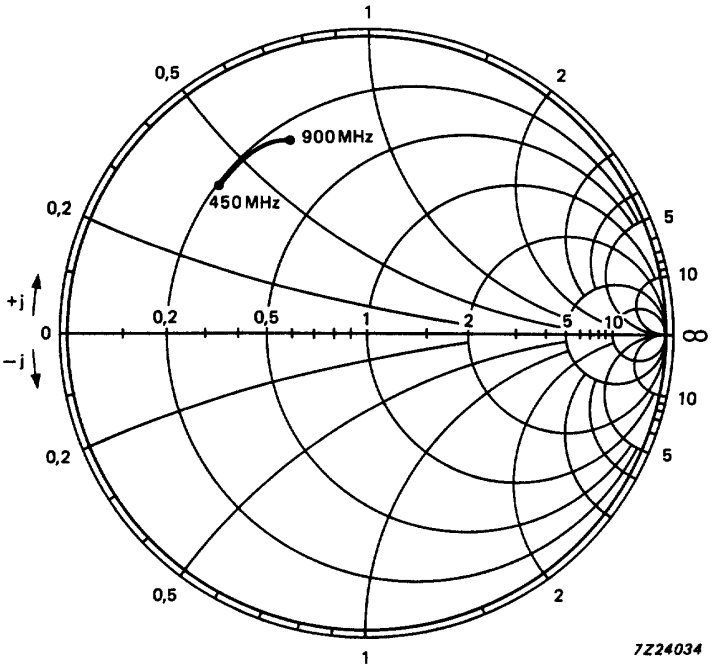

Fig.6 S11 of the band C mixer input (450 to 900 MHz).

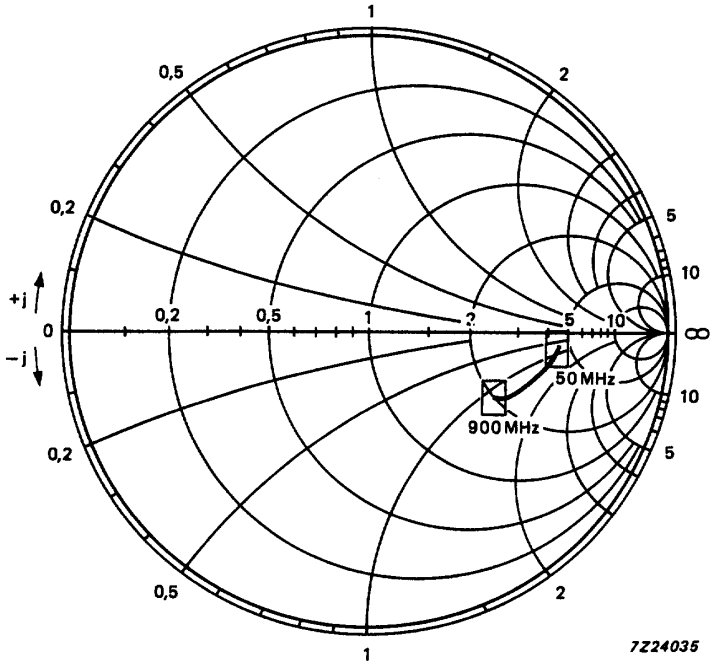

Fig.7 S11 of the LO output (50 to 900 MHz).

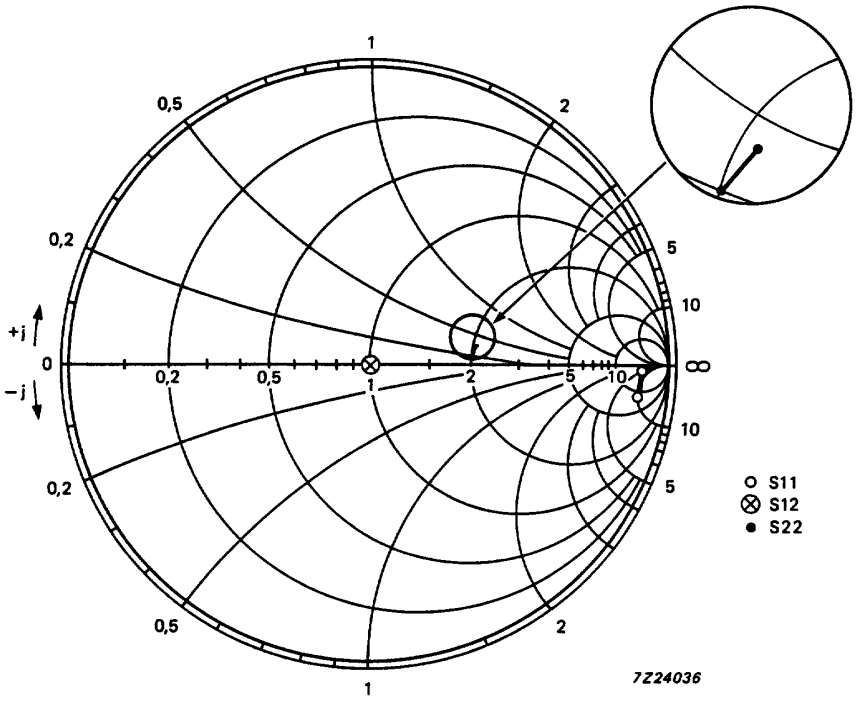

Fig.8 S11, S12 and S22 of the IF amplifier (30 to 60 MHz).

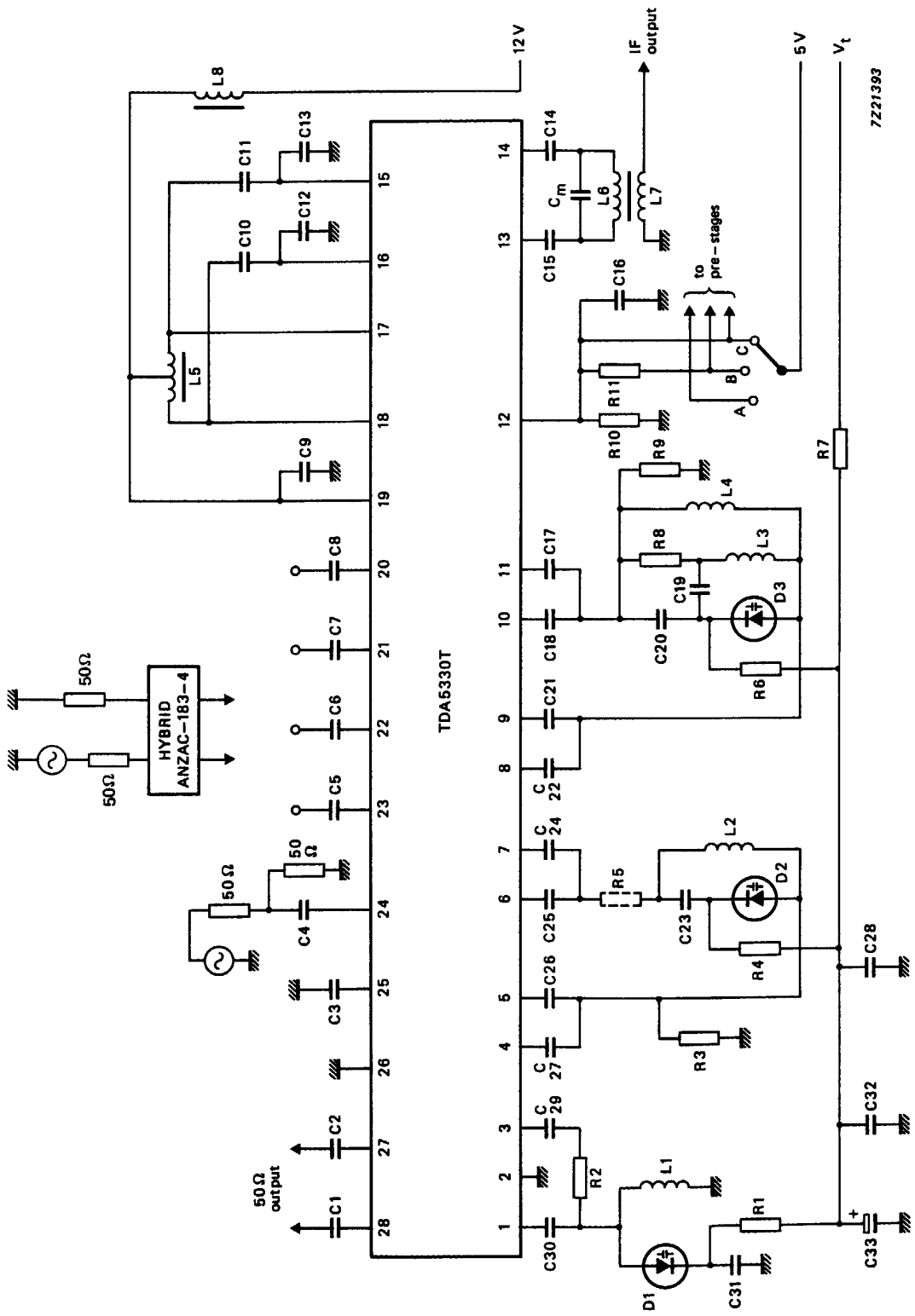

Fig.9 Test circuit diagram.

Component values of the test circuit

resistors

R1 = 47 kΩ	R2 = 18 Ω	R3 = 22 kΩ	R4 = 22 kΩ
R5 = 22 Ω (SMD)	R6 = 22 kΩ	R7 = 1 kΩ	R8 = 2.2 kΩ
R9 = 22 kΩ	R10 = 15 kΩ	R11 = 22 kΩ	

capacitors

C1 = 1 nF	C2 = 1 nF	C3 = 1 nF	C4 = 1 nF
C5 = 1 nF	C6 = 1 nF	C7 = 1 nF	C8 = 1 nF
C9 = 1 nF	C10 = 1 nF	C11 = 1 nF	C12 = 15 pF (N750)
C13 = 15 pF (N750)	C14 = 1 nF	C15 = 1 nF	C16 = 1 nF
C17 = 0.68 pF (SMD)	C18 = 1 pF (SMD)	C19 = 100 pF (SMD)	C20 = 5.6 pF (SMD)
C21 = 1 pF	C22 = 0.68 pF (SMD)	C23 = 150 pF (N750)	C24 = 1.8 pF (N750)
C25 = 3.3 pF (SMD)	C26 = 3.3 pF (SMD)	C27 = 1.8 pF (SMD)	C28 = 1 nF
C29 = 1 pF (NPO)	C30 = 1 pF (NPO)	C31 = 82 pF (N750)	C32 = 1 nF
C33 = 1 μF (40 V)	Cm = 18 pF (N750)		

diodes and IC

D1 = BB911	D2 = BB909B	D3 = BB405B
IC = TDA5330T		

coils

L1 = 6.5 t (ϕ3)	L2 = 1.5 t (ϕ3)	L3 = 1.5 t (ϕ3)	L4 = 1.5 t (ϕ3)
L5 = 2 × 6 t (note 1)	L6 = 12 t (note 1)	L7 = 2 t (mounted on L6)	L8 = 5 μH (choke coil)

wire size for L1 to L4 = 0.4 and for L5 to L7 = 0.1 mm.

Note

1. Coil type: TOKO 7 kN; material: 113 kN, screw core (03-0093), pot core (04-0026).

PACKAGE OUTLINE

SO20: plastic small outline package; 20 leads; body width 7.5 mm **SOT163-1**

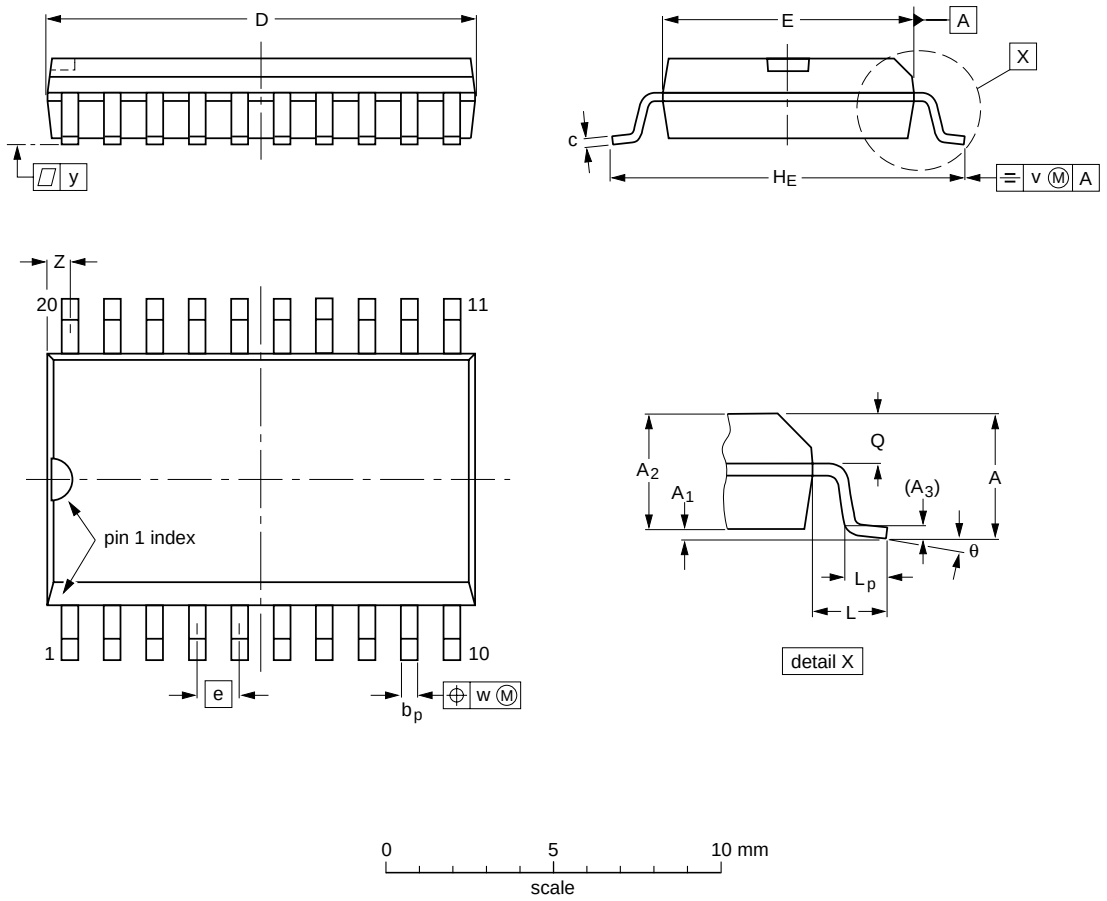

DIMENSIONS (inch dimensions are derived from the original mm dimensions)

UNIT	A max.	A_1	A_2	A_3	b_p	c	D (1)	E (1)	e	H_E	L	L_p	Q	v	w	y	Z (1)	θ
mm	2.65	0.30 0.10	2.45 2.25	0.25	0.49 0.36	0.32 0.23	13.0 12.6	7.6 7.4	1.27	10.65 10.00	1.4	1.1 0.4	1.1 1.0	0.25	0.25	0.1	0.9 0.4	8° 0°
inches	0.10	0.012 0.004	0.096 0.089	0.01	0.019 0.014	0.013 0.009	0.51 0.49	0.30 0.29	0.050	0.419 0.394	0.055	0.043 0.016	0.043 0.039	0.01	0.01	0.004	0.035 0.016	

Note

1. Plastic or metal protrusions of 0.15 mm maximum per side are not included.

OUTLINE VERSION	REFERENCES				EUROPEAN PROJECTION	ISSUE DATE
	IEC	JEDEC	EIAJ			
SOT163-1	075E04	MS-013AC				~~95-01-24~~ 97-05-22

SOLDERING

Introduction

There is no soldering method that is ideal for all IC packages. Wave soldering is often preferred when through-hole and surface mounted components are mixed on one printed-circuit board. However, wave soldering is not always suitable for surface mounted ICs, or for printed-circuits with high population densities. In these situations reflow soldering is often used.

This text gives a very brief insight to a complex technology. A more in-depth account of soldering ICs can be found in our *"IC Package Databook"* (order code 9398 652 90011).

Reflow soldering

Reflow soldering techniques are suitable for all SO packages.

Reflow soldering requires solder paste (a suspension of fine solder particles, flux and binding agent) to be applied to the printed-circuit board by screen printing, stencilling or pressure-syringe dispensing before package placement.

Several techniques exist for reflowing; for example, thermal conduction by heated belt. Dwell times vary between 50 and 300 seconds depending on heating method. Typical reflow temperatures range from 215 to 250 °C.

Preheating is necessary to dry the paste and evaporate the binding agent. Preheating duration: 45 minutes at 45 °C.

Wave soldering

Wave soldering techniques can be used for all SO packages if the following conditions are observed:

- A double-wave (a turbulent wave with high upward pressure followed by a smooth laminar wave) soldering technique should be used.
- The longitudinal axis of the package footprint must be parallel to the solder flow.
- The package footprint must incorporate solder thieves at the downstream end.

During placement and before soldering, the package must be fixed with a droplet of adhesive. The adhesive can be applied by screen printing, pin transfer or syringe dispensing. The package can be soldered after the adhesive is cured.

Maximum permissible solder temperature is 260 °C, and maximum duration of package immersion in solder is 10 seconds, if cooled to less than 150 °C within 6 seconds. Typical dwell time is 4 seconds at 250 °C.

A mildly-activated flux will eliminate the need for removal of corrosive residues in most applications.

Repairing soldered joints

Fix the component by first soldering two diagonally- opposite end leads. Use only a low voltage soldering iron (less than 24 V) applied to the flat part of the lead. Contact time must be limited to 10 seconds at up to 300 °C. When using a dedicated tool, all other leads can be soldered in one operation within 2 to 5 seconds between 270 and 320 °C.

DEFINITIONS

Data sheet status	
Objective specification	This data sheet contains target or goal specifications for product development.
Preliminary specification	This data sheet contains preliminary data; supplementary data may be published later.
Product specification	This data sheet contains final product specifications.
Limiting values	
Limiting values given are in accordance with the Absolute Maximum Rating System (IEC 134). Stress above one or more of the limiting values may cause permanent damage to the device. These are stress ratings only and operation of the device at these or at any other conditions above those given in the Characteristics sections of the specification is not implied. Exposure to limiting values for extended periods may affect device reliability.	
Application information	
Where application information is given, it is advisory and does not form part of the specification.	

LIFE SUPPORT APPLICATIONS

These products are not designed for use in life support appliances, devices, or systems where malfunction of these products can reasonably be expected to result in personal injury. Philips customers using or selling these products for use in such applications do so at their own risk and agree to fully indemnify Philips for any damages resulting from such improper use or sale.