查询TDA7346供应商 捷多邦，专业PCB打样工厂，24小时加急出货

SGS-THOMSON MICROELECTRONICS

TDA7346

DIGITAL CONTROLLED SURROUND SOUND MATRIX

- 1 STEREO INPUT
- THREE INDEPENDENT SURROUND MODES ARE AVAILABLE MOVIE, MUSIC AND SIMULATED
  - MUSIC: 4 SELECTABLE RESPONSES
  - MOVIE AND SIMULATED: 256 SELECTABLE RESPONSES
- TWO INDEPENDENT INPUT ATTENUATORS IN 0.31dB FOR BALANCE FACILITY
- ALL FUNCTIONS PROGRAMMABLE VIA SERIAL BUS

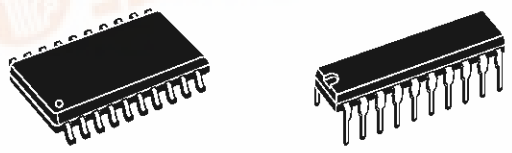

SO20 DIP20

ORDERING NUMBER: TDA7346 (DIP20)
TDA7346D (SO20)

DESCRIPTION

The TDA7346 reproduces surround sound by using phase shifters and a signal matrix. Control of all the functions is accomplished by serial bus. The AC signal setting is obtained by resistor networks and switches combined with operational amplifiers.

BLOCK DIAGRAM

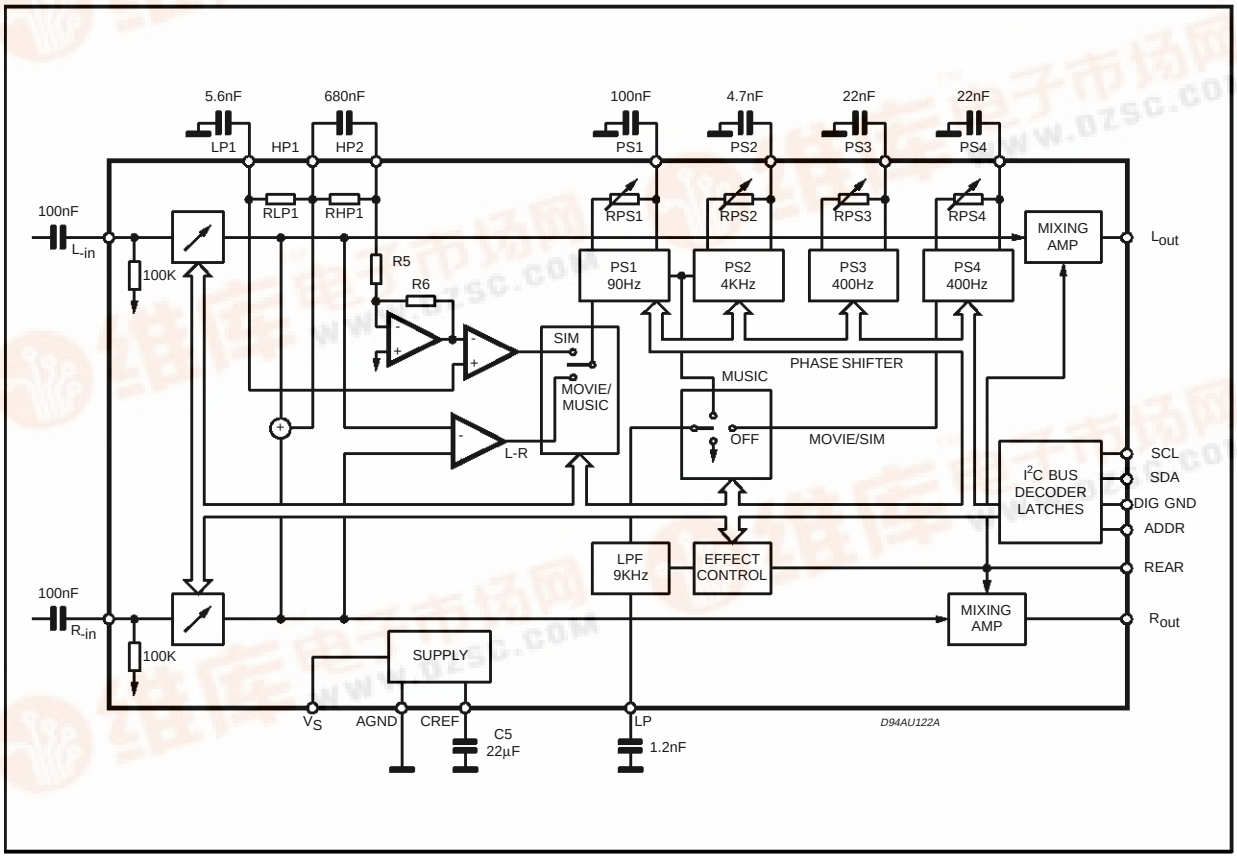

找PDF 维库一下 pdf.dzsc.com

ABSOLUTE MAXIMUM RATINGS

Symbol	Parameter	Value	Unit
V_S	Operating Supply Voltage	10.5	V
T_{amb}	Operating Ambient Temperature	-40 to 85	°C
T_{stg}	Storage Temperature Range	-55 to +150	°C

PIN CONNECTION

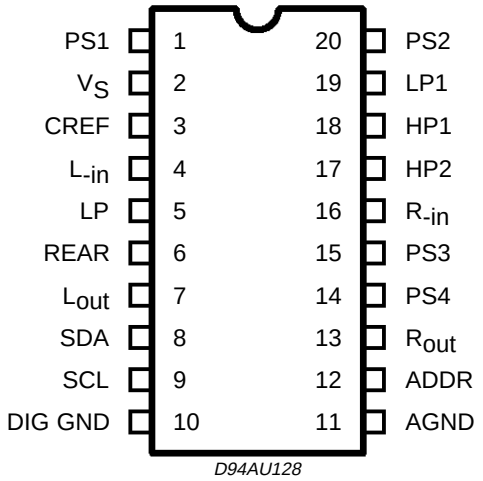

THERMAL DATA

Symbol	Description		Value	Unit
$R_{th\ j\text{-}pins}$	Thermal Resistance Junction-pins	Max.	85	°C/W

QUICK REFERENCE DATA

Symbol	Parameter	Min.	Typ.	Max.	Unit
V_S	Supply Voltage	7	9	10.2	V
V_{CL}	Max. input signal handling	2			Vrms
THD	Total Harmonic Distortion V = 1Vrms f = 1KHz		0.02	0.1	%
S/N	Signal to Noise Ratio V_{out} = 1Vrms (mode = OFF)		106		dB
S_C	Channel Separation f = 1KHz		70		dB

TEST CIRCUIT

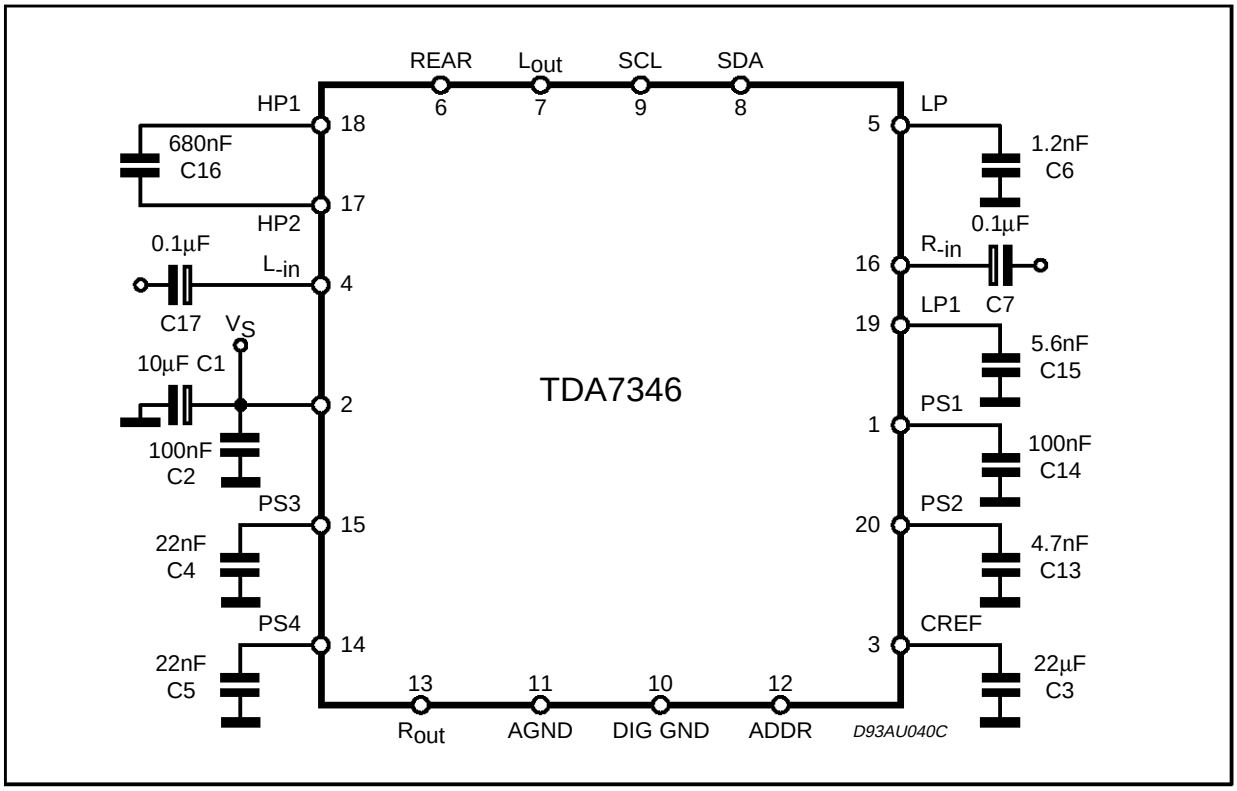

ELECTRICAL CHARACTERISTICS (refer to the test circuit T_{amb} = 25°C, V_S = 9V, R_L = 10KΩ, R_G = 600Ω, all controls flat (G = 0),Effect Ctrl = -6dB, MODE = OFF; f = 1KHz unless otherwise specified)

Symbol	Parameter	Test Condition	Min.	Typ.	Max.	Unit
SUPPLY						
V_S	Supply Voltage		7	9	10.2	V
I_S	Supply Current			10		mA
SVR	Ripple Rejection	L_{CH} / $R_{CH\ out}$, Mode = OFF	60	80		dB
INPUT STAGE						
R_{II}	Input Resistance			100		KΩ
V_{CL}	Clipping Level	THD = 0.3%; Lin or Rin	2	2.5		Vrms
		THD = 0.3%; Rin + Lin (2)		3.0		Vrms
C_{RANGE}	Control Range			20		dB
A_{VMIN}	Min. Attenuation		-1	0	1	dB
A_{VMAX}	Max. Attenuation			20		dB
A_{STEP}	Step Resolution			0.31		dB
V_{DC}	DC Steps	adjacent att. step		0		mV
EFFECT CONTROL						
C_{RANGE}	Control Range		- 21		- 6	dB
S_{STEP}	Step Resolution			1		dB

ELECTRICAL CHARACTERISTICS (continued)
SURROUND SOUND MATRIX

Symbol	Parameter	Test Condition	Min.	Typ.	Max.	Unit
G_{OFF}	In-phase Gain (OFF)	Mode OFF, Input signal of 1kHz, 1.4 V_{p-p}, $R_{in} \rightarrow R_{out}$ $L_{in} \rightarrow L_{out}$	-1.5	0	1.5	dB
D_{GOFF}	LR In-phase Gain Difference (OFF)	Mode OFF, Input signal of 1kHz, 1.4 V_{p-p} ($R_{in} \rightarrow R_{out}$), ($L_{in} \rightarrow L_{out}$)	-1.5	0	1.5	dB
G_{MOV1}	In-phase Gain (Movie 1) RPS1, RPS2, RPS3, RPS4 = POR Preset	Movie mode, Effect Ctrl = -6dB Input signal of 1kHz, 1.4 V_{p-p} $R_{in} \rightarrow R_{out}$, $L_{in} \rightarrow L_{out}$		7		dB
G_{MOV2}	In-phase Gain (Movie 2) RPS1, RPS2, RPS3, RPS4 = POR Preset	Movie mode, Effect Ctrl = -6dB Input signal of 1kHz, 1.4 V_{p-p} $R_{in} \rightarrow R_{out}$, $L_{in} \rightarrow L_{out}$		8		dB
D_{GMOV}	LR In-phase Gain Difference (Movie)	Movie mode, Effect Ctrl = -6dB Input signal of 1kHz, 1.4 V_{p-p} ($R_{in} \rightarrow R_{out}$) – ($L_{in} \rightarrow L_{out}$)		0		dB
G_{MUS1}	In-phase Gain (Music 1) RPS1 = POR PRESET	Music mode, Effect Ctrl = -6dB Input signal of 1kHz, 1.4 V_{p-p} ($R_{in} \rightarrow R_{out}$) – ($L_{in} \rightarrow L_{out}$)		6		dB
G_{MUS2}	In-phase Gain (Music 2) RPS1 = POR PRESET	Music mode, Effect Ctrl = -6dB Input signal of 1kHz, 1.4 V_{p-p} $R_{in} \rightarrow R_{out}$, $L_{in} \rightarrow L_{out}$		7.5		dB
D_{GMUS}	LR In-phase Gain Difference (Music)	Music mode, Effect Ctrl = -6dB Input signal of 1kHz, 1.4 V_{p-p} ($R_{in} \rightarrow R_{out}$) – ($L_{in} \rightarrow L_{out}$)		0		dB
L_{MON1}	Simulated L Output 1 RPS1, RPS2, RPS3, RPS4 = POR Preset	Simulated Mode, Effect Ctrl = -6dB Input signal of 250Hz, 1.4 V_{p-p}, R_{in} and $L_{in} \rightarrow L_{out}$		4.5		dB
L_{MON2}	Simulated L Output 2 RPS1, RPS2, RPS3, RPS4 = POR Preset	Simulated Mode, Effect Ctrl = -6dB Input signal of 1kHz, 1.4 V_{p-p}, R_{in} and $L_{in} \rightarrow L_{out}$		– 4.0		dB
L_{MON3}	Simulated L Output 3 RPS1, RPS2, RPS3, RPS4 = POR Preset	Simulated Mode, Effect Ctrl = -6dB Input signal of 3.6kHz, 1.4 V_{p-p}, R_{in} and $L_{in} \rightarrow L_{out}$		7.0		dB
R_{MON1}	Simulated R Output 1 RPS1, RPS2, RPS3, RPS4 = POR Preset	Simulated Mode, Effect Ctrl = -6dB Input signal of 250Hz, 1.4 V_{p-p}, R_{in} and $L_{in} \rightarrow R_{out}$		– 4.5		dB
R_{MON2}	Simulated R Output 2 RPS1, RPS2, RPS3, RPS4 = POR Preset	Simulated Mode, Effect Ctrl = -6dB Input signal of 1kHz, 1.4 V_{p-p}, R_{in} and $L_{in} \rightarrow R_{out}$		3.8		dB
R_{MON3}	Simulated R Output 3 RPS1, RPS2, RPS3, RPS4 = POR Preset	Simulated Mode, Effect Ctrl = -6dB Input signal of 3.6kHz, 1.4 V_{p-p}, R_{in} and $L_{in} \rightarrow R_{out}$		– 20		dB
R_{LP1}	Low Pass Filter Resistance			10		KΩ
R_{PS1}	Phase Shifter 1 Resistance	at POR		17.95		kΩ
R_{PS2}	Phase Shifter 2 Resistance	at POR		8.465		KΩ
R_{PS3}	Phase Shifter 3 Resistance	at POR		18.050		KΩ
R_{PS2}	Phase Shifter 4 Resistance	at POR		18.050		KΩ
R_{HPI}	High Pass Filter Resistance			60		KΩ
R_{LPF}	LP Pin Impedance			10		KΩ

ELECTRICAL CHARACTERISTICS (continued)

Symbol	Parameter	Test Condition	Min.	Typ.	Max.	Unit
AUDIO OUTPUTS						
V_{OCL}	Clipping Level	d = 0.3%	2	2.5		Vrms
R_{OUT}	Output resistance		100	200	300	Ω
V_{OUT}	DC Voltage Level		3.5	3.8	4.1	V
GENERAL						
$N_{O(OFF)}$	Output Noise (OFF)	B_W = 20Hz to 20KHz R_{out} and L_{out} measurement		8		µVrms
$N_{O(MOV)}$	Output Noise (Movie)	Mode =Movie , B_W = 20Hz to 20KHz R_{out} and L_{out} measurement		30		µVrms
$N_{O(MUS)}$	Output Noise (Music)	Mode = Music , B_W = 20Hz to 20KHz, R_{out} and L_{out} measurement		30		µVrms
$N_{O(MON)}$	Output Noise (Simulated)	Mode = Simulated, B_W = 20Hz to 20KHz R_{out} and L_{out} measurement		30		µVrms
d	Distorsion	Av = 0 ; V_{in} = 1Vrms		0.02	0.1	%
S_C	Channel Separation			70		dB
BUS INPUTS						
V_{IL}	Input Low Voltage				1	V
V_{IH}	Input High Voltage		3			V
I_{IN}	Input Current		-5		+5	µA
V_O	Output Voltage SDA Acknowledge	I_O = 1.6mA		0.4	0.8	V

Note:

(1) Bass and Treble response: The center frequency and the resonance quality can be choosen by the external circuitry. A standard first order bass response can be realized by a standard feedback network.

(2) The peak voltage of the two input signals must be less then $\frac{V_S}{2}$:

$$(Lin + Rin)_{peak} \bullet A_{Vin} < \frac{V_S}{2}$$

I²C BUS INTERFACE

Data transmission from microprocessor to the TDA7346 and viceversa takes place through the 2 wires I²C BUS interface, consisting of the two lines SDA and SCL (pull-up resistors to positive supply voltage must be connected).

Data Validity

As shown in fig. 3, the data on the SDA line must be stable during the high period of the clock. The HIGH and LOW state of the data line can only change when the clock signal on the SCL line is LOW.

Start and Stop Conditions

As shown in fig.4 a start condition is a HIGH to LOW transition of the SDA line while SCL is HIGH. The stop condition is a LOW to HIGH transition of the SDA line while SCL is HIGH.

Byte Format

Every byte transferred on the SDA line must contain 8 bits. Each byte must be followed by an acknowledge bit. The MSB is transferred first.

Acknowledge

The master (µP) puts a resistive HIGH level on the SDA line during the acknowledge clock pulse (see fig. 5). The peripheral (audioprocessor) that acknowledges has to pull-down (LOW) the SDA line during the acknowledge clock pulse, so that the SDA line is stable LOW during this clock pulse.

The audioprocessor which has been addressed has to generate an acknowledge after the reception of each byte, otherwise the SDA line remains at the HIGH level during the ninth clock pulse time. In this case the master transmitter can generate the STOP information in order to abort the transfer.

Transmission without Acknowledge

Avoiding to detect the acknowledge of the audioprocessor, the µP can use a simpler transmission: simply it waits one clock without checking the slave acknowledging, and sends the new data.

This approach of course is less protected from misworking and decreases the noise immunity.

Figure 3: Data Validity on the I²CBUS

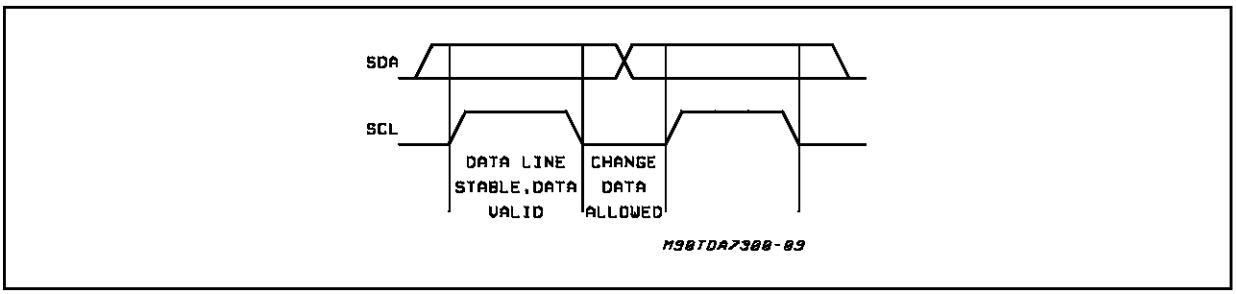

Figure 4: Timing Diagram of I²CBUS

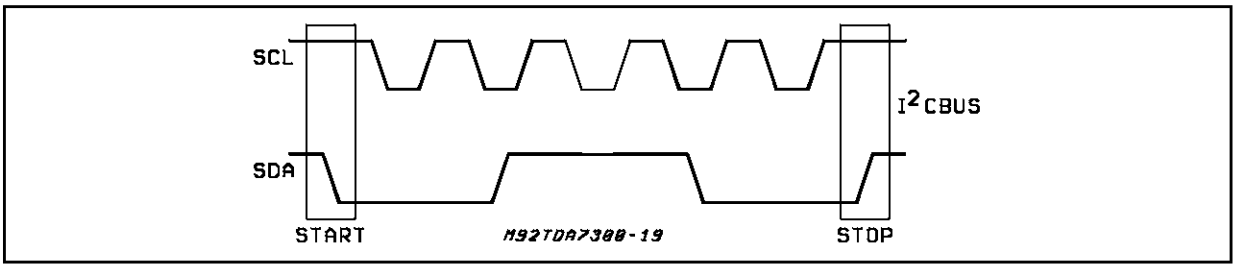

Figure 5: Acknowledge on the I²CBUS

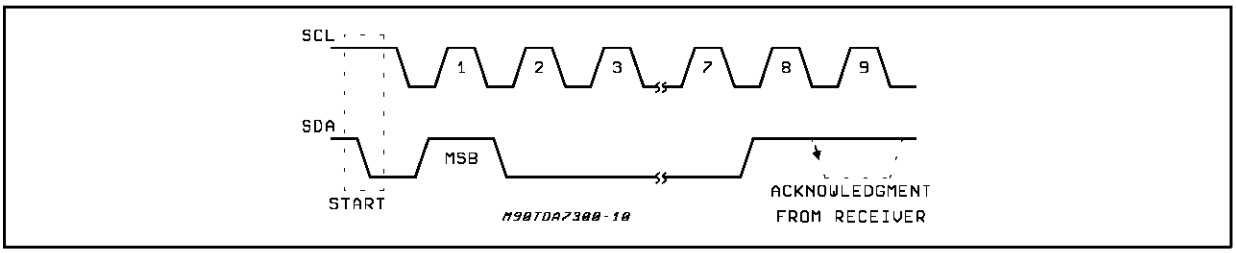

SOFTWARE SPECIFICATION

Interface Protocol

The interface protocol comprises:

- A start condition (s)
- A chip address byte, containing the TDA7346 address (the 8th bit of the byte must be 0). The TDA7346 must always acknowledge at the end of each transmitted byte.
- A sequence of data (N bytes + achnowledge).
- A stop condition (P)

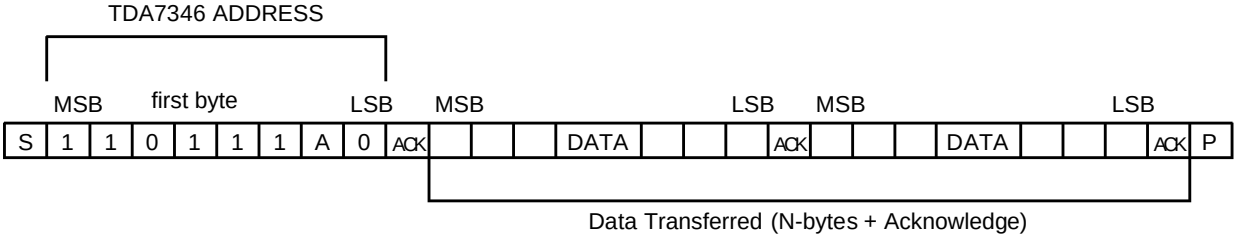

ACK = Acknowledge
S = Start
P = Stop

MAX CLOCK SPEED 100kbits/s

SOFTWARE SPECIFICATION

Chip address

1 MSB	1	0	1	1	1	A	0 LSB

A	CHIP ADDRESS
0	DC (HEX)
1	DE (HEX)

A = Logic level on pin ADDR

A = 1 if ADDR pin = open

A = 0 if ADDR pin = connected to ground

Software Specification

MSB							LSB	SUBADDRESS
0	0	A5	A4	A3	A2	A1	A0	INPUT ATTENUATION R
0	1	A5	A4	A3	A2	A1	A0	INPUT ATTENUATION L
1	M1	M0						SURROUND MODES
1	0	0						SIMULATED MODE
1	0	1						MUSIC MODE
1	1	0						MOVIE MODE
1	1	1	1	1	1	1	1	OFF MODE
1	M1	M0	1	B3	B2	B1	B0	EFFECT CONTROL
1	M1	M0	0	0	0	C1	C0	PHASE SHIFTER 4 CONTROL
1	M1	M0	0	0	1	C1	C0	PHASE SHIFTER 3 CONTROL
1	M1	M0	0	1	0	D1	D0	PHASE SHIFTER 2 CONTROL
1	M1	M0	0	1	1	E1	E0	PHASE SHIFTER 1 CONTROL

INPUT ATTENUATION								
MSB							**LSB**	**0.3125 dB STEPS**
	I	A5	A4	A3	A2	A1	A0	
0					0	0	0	0
0					0	0	1	-0.3125
0					0	1	0	-0.625
0					0	1	1	-0.9375
0					1	0	0	-1.25
0					1	0	1	-1.5625
0					1	1	0	-1.875
0					1	1	1	-2.1875
								2.5 dB STEPS
0		0	0	0				0
0		0	0	1				-2.5
0		0	1	0				-5
0		0	1	1				-7.5
0		1	0	0				-10
0		1	0	1				-12.5
0		1	1	0				-15
0		1	1	1				-17.5

I = 0 Attenuation Input R

I = 1 Attenuation Input L

Example: to program an R input attenuation equal to -11.25 you have to send 00100100

EFFECT CONTROL (-6 / -21dB)								
MSB							**LSB**	**1dB STEPS**
				B3	B2	B1	B0	
1	M1	M0	1	0	0	0	0	-6
1	M1	M0	1	0	0	0	1	-7
1	M1	M0	1	0	0	1	0	-8
1	M1	M0	1	0	0	1	1	-9
1	M1	M0	1	0	1	0	0	-10
1	M1	M0	1	0	1	0	1	-11
1	M1	M0	1	0	1	1	0	-12
1	M1	M0	1	0	1	1	1	-13
1	M1	M0	1	1	0	0	0	-14
1	M1	M0	1	1	0	0	1	-15
1	M1	M0	1	1	0	1	0	-16
1	M1	M0	1	1	0	1	1	-17
1	M1	M0	1	1	1	0	0	-18
1	M1	M0	1	1	1	0	1	-19
1	M1	M0	1	1	1	1	0	-20
1	M1	M0	1	1	1	1	1	-21

PHASE SHIFTER 3, 4								
MSB							**LSB**	**RESISTOR VALUE (KΩ)**
						C1	C0	
1	M1	M0	0	0	F	0	0	12.060
1	M1	M0	0	0	F	0	1	14.450
1	M1	M0	0	0	F	1	0	18.050
1	M1	M0	0	0	F	1	1	39.100

F = 0 Phase Shifter 4

F = 1 Phase Shifter 3

PHASE SHIFTER 2								
MSB							**LSB**	**RESISTOR VALUE (KΩ)**
						D1	D0	
1	M1	M0	0	1	0	0	0	5.640
1	M1	M0	0	1	0	0	1	6.770
1	M1	M0	0	1	0	1	0	8.465
1	M1	M0	0	1	0	1	1	18.300

PHASE SHIFTER 1								
MSB							**LSB**	**RESISTOR VALUE (KΩ)**
						E1	E0	
1	M1	M0	0	1	1	0	0	11.745
1	M1	M0	0	1	1	0	1	14.150
1	M1	M0	0	1	1	1	0	17.950
1	M1	M0	0	1	1	1	1	37.625

Example: to program MOVIE MODE with EFFECT control = -7dB with PHASE SHIFTER resistor = 11.745KΩ, PHASE SHIFTER 2 resistor = 6.77KΩ, PHASE SHIFTER 3 resistor = 12.06KΩ, PHASE SHIFTER 4 resistor = 18.05KΩ, you have to send in sequence 5 bytes:

11010001

11001100

11001001

11000100

11000010

POWER ON RESET	
INPUT ATTENUATION	-19.375dB
EFFECT CONTROL	-20dB
SURROUND MODE	OFF MODE
PHASE SHIFTER 1 RESISTOR VALUE	17.950 KΩ
PHASE SHIFTER 2 RESISTOR VALUE	8.465 KΩ
PHASE SHIFTER 3, 4 RESISTOR VALUE	18.050 KΩ

PIN: HP1

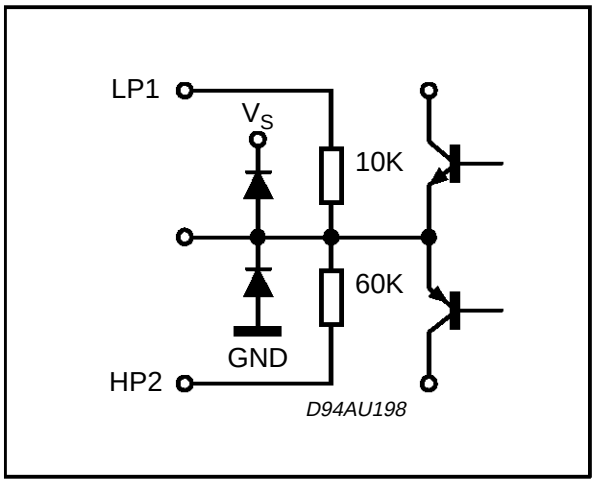

PIN: HP2

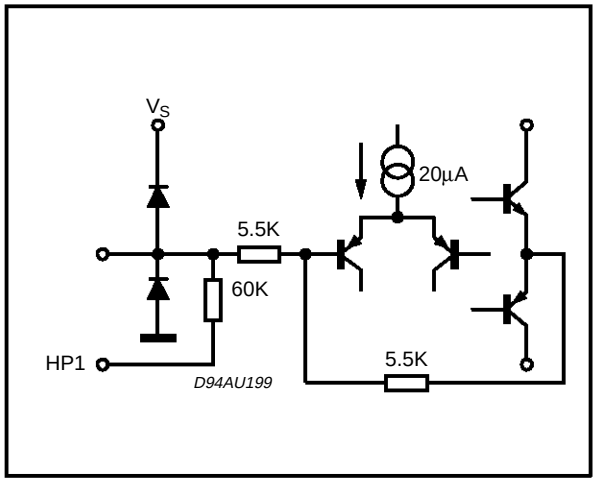

PIN: L_{in}, R_{in}

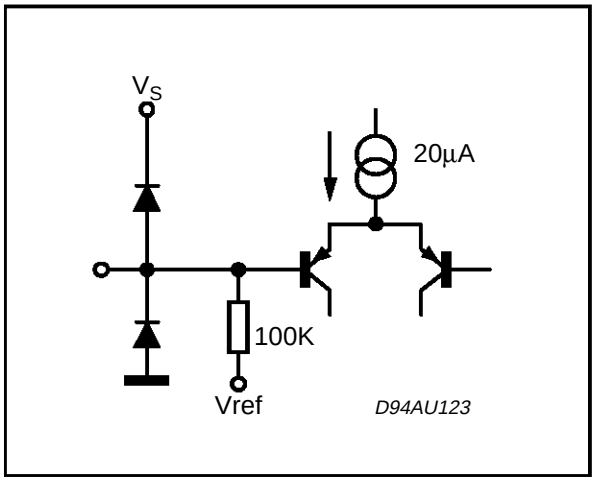

PIN: L_{OUT}, R_{OUT}, REAR

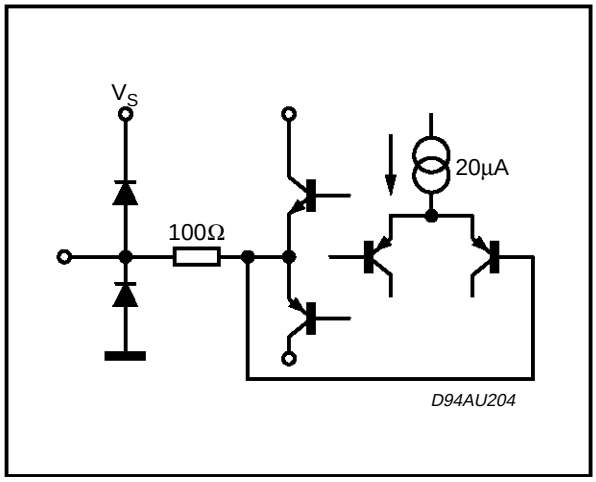

PIN: SCL, SDA

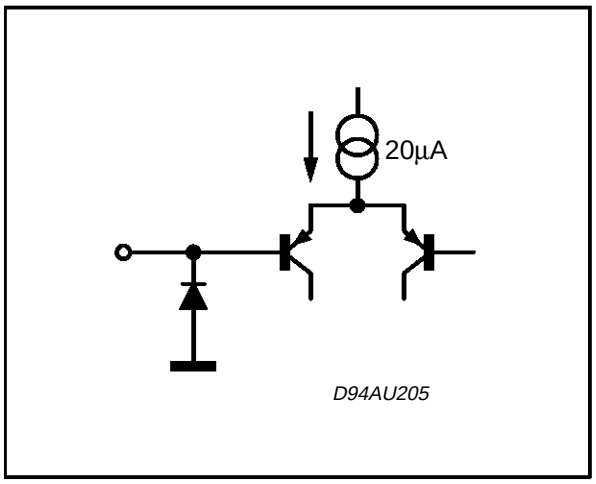

PIN: ADDR

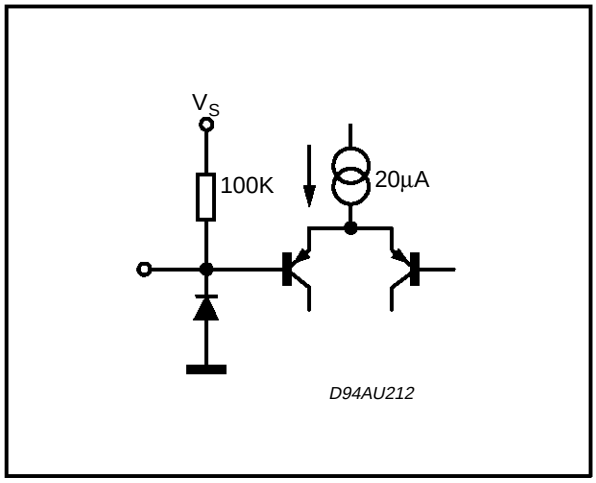

PIN: LP

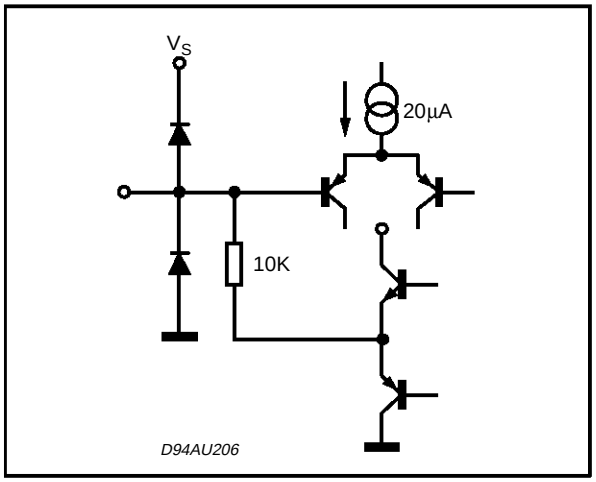

PIN: PS3, PS2

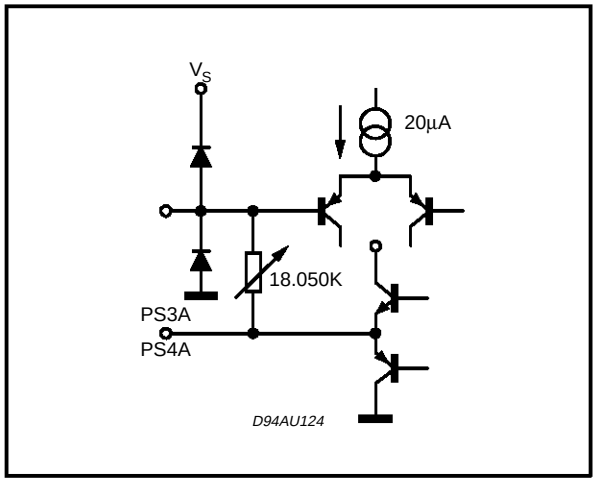

PIN: C_{REF}

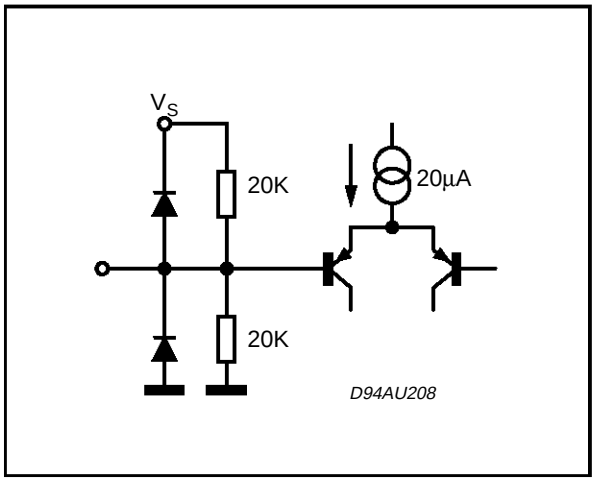

PIN: PS2

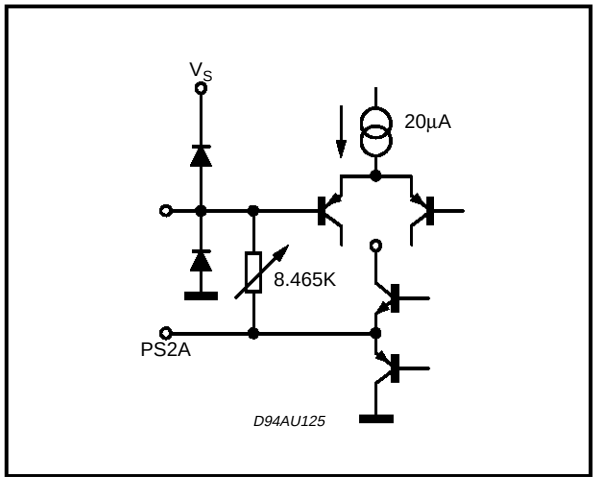

PIN: PS1

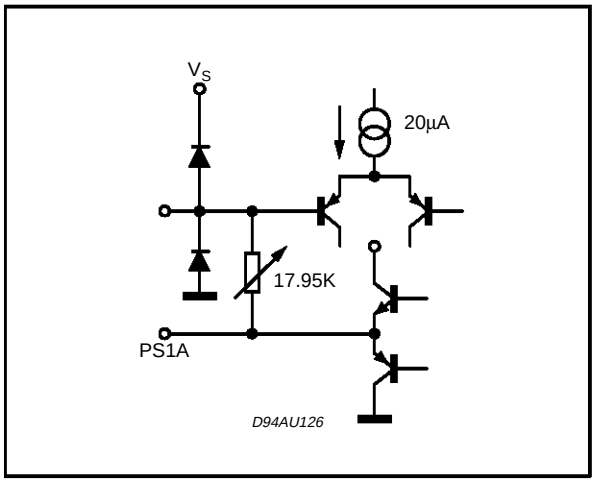

PIN: LP1

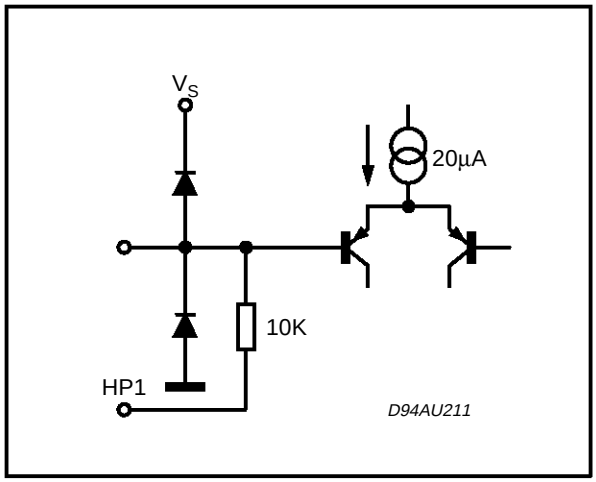

SO20 PACKAGE MECHANICAL DATA

DIM.	mm			inch		
	MIN.	TYP.	MAX.	MIN.	TYP.	MAX.
A			2.65			0.104
a1	0.1		0.3	0.004		0.012
a2			2.45			0.096
b	0.35		0.49	0.014		0.019
b1	0.23		0.32	0.009		0.013
C		0.5			0.020	
c1	45° (typ.)					
D	12.6		13.0	0.496		0.512
E	10		10.65	0.394		0.419
e		1.27			0.050	
e3		11.43			0.450	
F	7.4		7.6	0.291		0.299
L	0.5		1.27	0.020		0.050
M			0.75			0.030
S	8° (max.)					

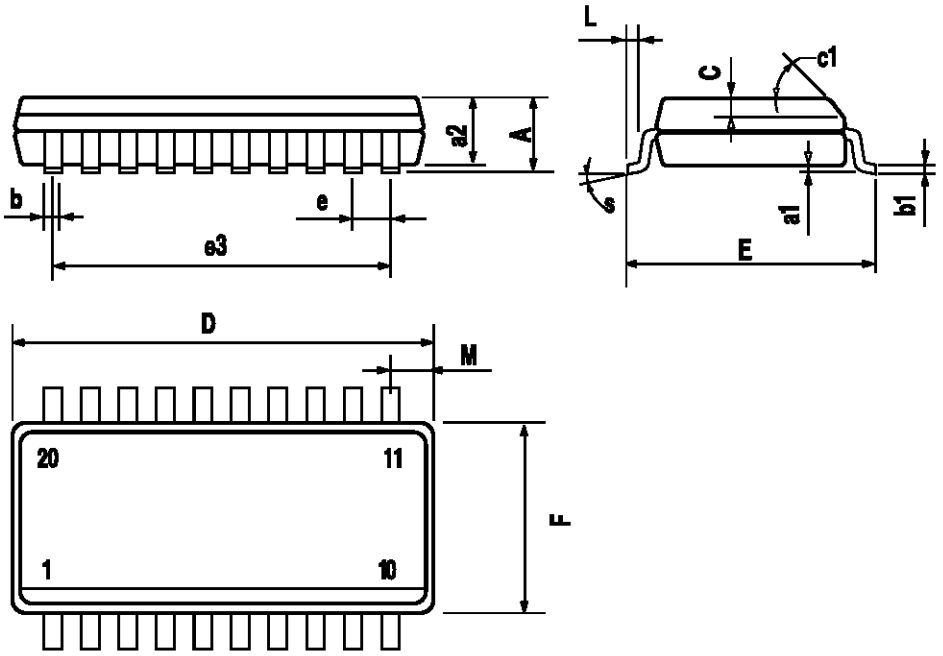

DIP20 PACKAGE MECHANICAL DATA

DIM.	mm			inch		
	MIN.	TYP.	MAX.	MIN.	TYP.	MAX.
a1	0.254			0.010		
B	1.39		1.65	0.055		0.065
b		0.45			0.018	
b1		0.25			0.010	
D			25.4			1.000
E		8.5			0.335	
e		2.54			0.100	
e3		22.86			0.900	
F			7.1			0.280
I			3.93			0.155
L		3.3			0.130	
Z			1.34			0.053

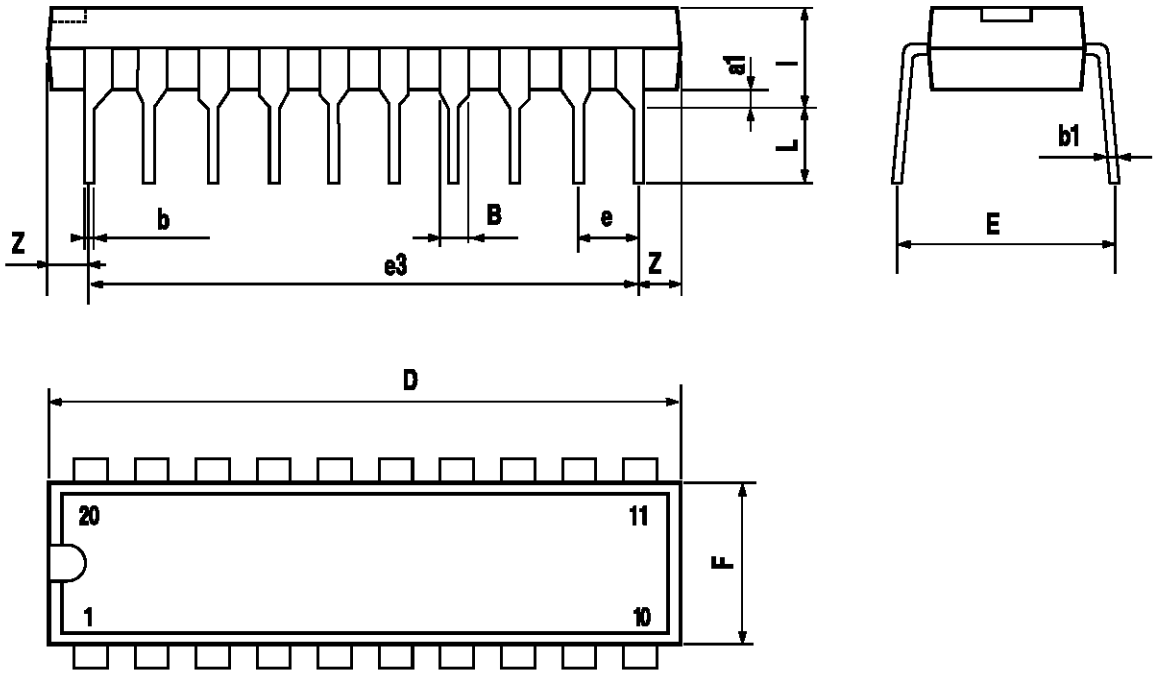

Information furnished is believed to be accurate and reliable. However, SGS-THOMSON Microelectronics assumes no responsibility for the consequences of use of such information nor for any infringement of patents or other rights of third parties which may result from its use. No license is granted by implication or otherwise under any patent or patent rights of SGS-THOMSON Microelectronics. Specification mentioned in this publication are subject to change without notice. This publication supersedes and replaces all information previously supplied. SGS-THOMSON Microelectronics products are not authorized for use as critical components in life support devices or systems without express written approval of SGS-THOMSON Microelectronics.

© 1997 SGS-THOMSON Microelectronics – Printed in Italy – All Rights Reserved

SGS-THOMSON Microelectronics GROUP OF COMPANIES

Australia - Brazil - Canada - China - France - Germany - Hong Kong - Italy - Japan - Korea - Malaysia - Malta - Morocco - The Netherlands - Singapore - Spain - Sweden - Switzerland - Taiwan - Thailand - United Kingdom - U.S.A.