DBL 1026

PLL FM STEREO MULTIPLEX

The DBL 1026 is designed for low supply voltage use.

16DIP Unit: mm

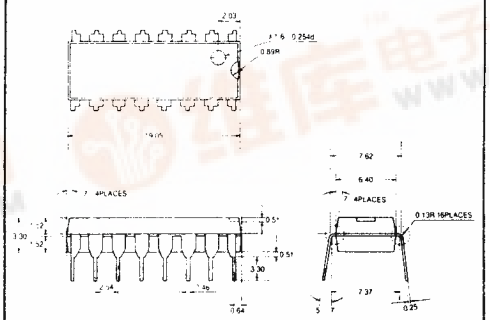

☐ FEATURES

- ○ Excellent pilot lamp turning-on sensitivity :
  V_L (ON) = 7mV
- ○ Wide operating supply voltage range :
  V_{CC} = 3V～16V
- ○ Recommended supply voltage :
  V_{CC} = 6V
- ○ Recommendable input signal voltage range
  V_{IN} = 100mV～200mV
- ○ High Gain
- ○ Good ripple rejection
- ○ Provision of a separation control pin
- ○ Built-in stereo indicator lamp drive circuit
- ○ Low quiescent current : I_{CCO} = 8.5mA(Typ.)
- ○ Operation of forced mono or VCO stoping by only one pin
  Stereo(Auto) : V_9 < 0.7V or opened
  Forced Mono : 0.7V < V_9 < 2.1V
  VCO Stopping : V_9 < 2.1V

☐ APPLICATIONS

- ○ Portable radios and radio cassettes

☐ MAXIMUM RATINGS(Ta=25°C)

Characteristic	Symbol	Rating	Unit
Supply Voltage	V_{CC}	16	V
Lamp Driving Current	I_L	40	mA
Power Dissipation	P_D	400	mW
Operating Temperature	T_{opr}	−20～+70	°C
Storage Temperature	T_{stg}	−40～+125	°C

☐ ELECTRICAL CHARACTERISTICS

(Unless otherwise specified, Ta = 25°C, V_{CC} = 6V, R_L = 3.3KΩ, V_{IN} = 100mV, L + R = 90%, Pilot = 10%, f = 1KHz).

Characteristic	Symbol	Condition	Min.	Typ.	Max.	Unit
Quiescent Current	I_{CCQ}	—	—	8.5	12	mA
Channel Separation	CH_{SEP}	—	35	45	—	dB
Input Resistance	R_{IN}	—	15	20	—	KΩ
Total Harmonic Distorion	THD	Stereo	—	0.2	0.7	%
Output Voltage	V_O	—	66	85	115	mV
Channel Balance	C.B.	—	—	0.5	1.5	dB
Lamp Turn-on Level	V_L	—	—	65	—	mV
Capture Range	C.R.	—	—	±2.5	—	%
Allowable Input Level	V_{IN}	THD = 2%	—	450	—	mV

☐ BLOCK DIAGRAM

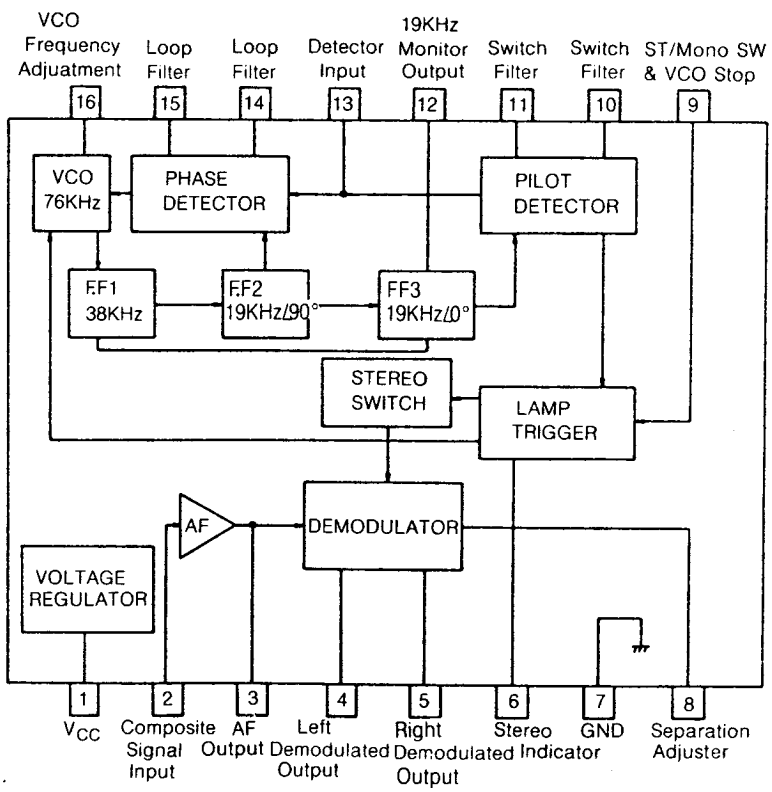

☐ INFORMATION IN USING IC

1. Input Coupling Capacitor
   It is connected to pin2 and the recommended value is 4.7μF. The smaller values than 4.7μF make low frequency worsen, and the larger values make the DC operating time required for stabilization

2. Separation control
   The variable resistor of pin8 control the output signal separation.

3. Loop Filter Capacitor
   These capacitors are connected between pin14 and pin15 and determine the capture range. Since capture range is apt to extend in company with input level, these values need to be increase to 1μF when input level is designed to be over 250mV. After all capture range becomes narrow to some extent and is not strongly influenced by high frequency input signal.

4. Phase Compansation Capacitor
   This capacitor of 620pF between pin3 and ground is prepared in order to compensate the advanced phase by decoupling capacitor between pin3 and pin13 and the phase lag by PLL.

5. Stereo, Monaural and VCO Stop Switch.
   The applied voltage of pin9 change the mode of stereo/monaural and VCO stop. If the voltage less than 0.7V or opened is applied to pin9, auto stereo operation is got. If 0.7V to 2.1V is applied, the operation is switched over to forced monaural. If 2.1V or more is applied, VCO is stopped and stereo indicator is protected from error operation. Therefore external protector is needless. When we apply voltage to pin 9, We should avoid the Voltage near 0.7V or 2.1V because this condition causes to call hum and noise from an input. That is, intermediate voltage as $V_9 = 0V$, 1.4V or 2.8V is available. When VCO stop made by appling the voltage to pin9 is released, the stereo indicator may light up momentarily. This phenomenon occurs when a large valve of the capacitor is connected between pin 10 and pin11. The reason is that the trigger circuit is turned ON until the capacitor between pin10 and pin11 is discharged if the pin10 side of capacitor is charged at "High"at VCO stop made and than VCO stop and forced monaural are released simultaneously. It can be prevented by a capacitor being connected across pin9 and GND so that the voltage on pin9 drops slowly at the time of release.

☐ TYPICAL PERFORMANCE CHARACTERISTICS

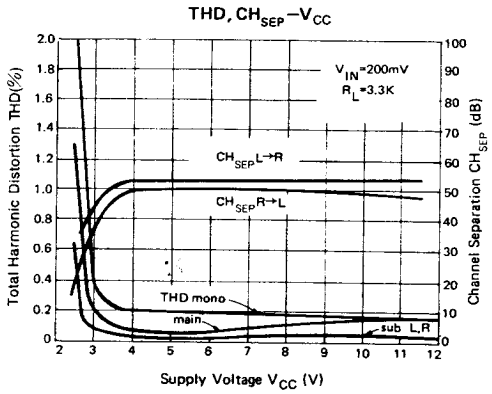

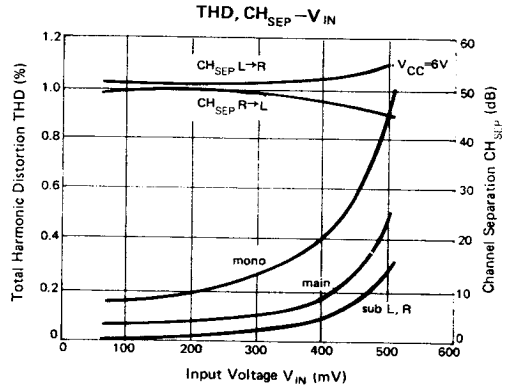

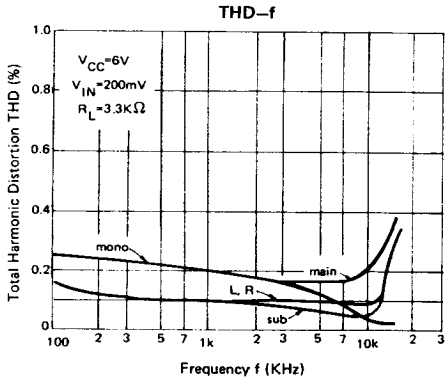

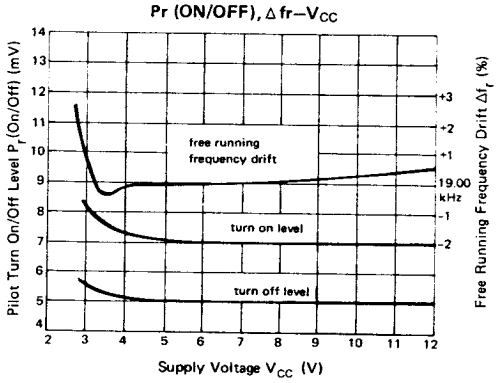

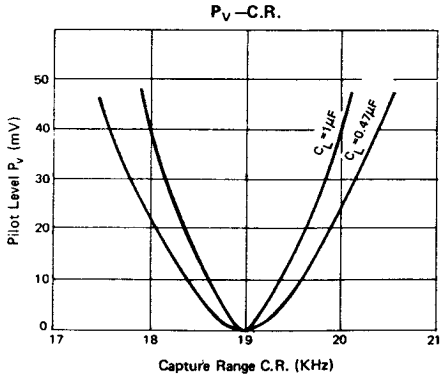

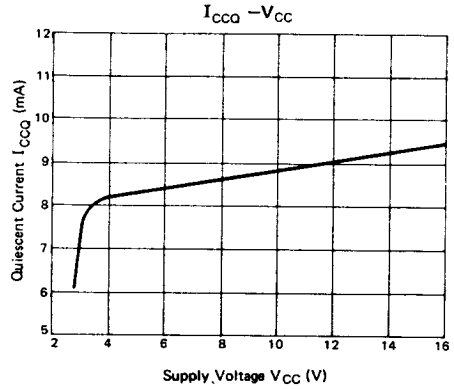

☐ TEST AND APPLICATION CIRCUIT(V_{CC} =6V, f=1KHz. pilot 10%, L+R=45% L−R=45%)