查询DBL2044供应商 捷多邦，专业PCB打样工厂，24小时加急出货

DBL 2044

TUNER BAND SELECTOR FOR TV SETS

The DBL 2044 is an IC for tuner band selection of electronic tuning type television set. This IC is used for producing the VHF channel "L" band power supply/VHF channel "H" band power supply/UHF channel power supply for tuner and the CATV power supply according to the band select signal of 2 input.

9 SIP Unit mm

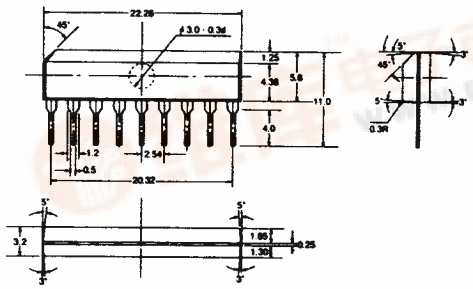

☐ FUNCTIONS

- ○ VHF "L" band power supply output.
- ○ VHF "H" band power supply output.
- ○ UHF power supply output.
- ○ CATV power supply output.

☐ FEATURES

- ○ 2 inputs and 4 outputs.
- ○ Output low saturation voltage : 0.25V Typ., I_o=60mA
- ○ Compact 9 PIN Single In-Line package.

☐ MAXIMUM RATINGS(Ta=25℃)

Characteristic	Symbol	Rating	Unit
Supply Voltage	V_9 max	15	V
Load Current	I_1 max, I_2 max I_7 max, I_8 max	−60	mA
Supply Current V_{CC2}	I_6 max	10	mA
Allowable Power Dissipation	P_d max	200	mW
Operating Temperature	Topg	−20～+85	℃
Storage Temperature	Tstg	−55～+125	℃
Input Current	I_3 max, I_4 max	2	mA

找PDF 维库一下 pdf.dzsc.com

☐ ELECTRICAL CHARACTERISTICS(Ta=25℃)

Characteristic	Symbol	Test Condition	Min.	Typ.	Max.	Unit
Dissipation Current	I_1, I_2, I_7, I_8		–	–	60	mA
Output Saturatiuon Voltage	V_1 (sat) V_2 (sat) V_7 (sat) V_8 (sat)	V_9=12V, I_6=5mA I_0=60mA	0	0.25	0.7	V
Input "H" Level Threshold Voltage	V_{TH}		–	–	3.0	V
Input "L" Level Threshold Voltage	V_{TL}		0.8	–	–	V
Output Leak Current	I_1 (leak) I_2 (leak) I_7 (leak) I_8 (leak)	Ta≦70℃	–	–	50	uA

Note) Current Direction :
Current flowing into IC : PLUS(No sign)
Current flowing out of IC : MINUS(–)

☐ TRUTH TABLE

Input		Output			
PIN 3	PIN 4	PIN 1	PIN 2	PIN 7	PIN 8
L	L	H	Z	Z	Z
H	L	Z	H	Z	Z
L	H	Z	Z	H	Z
H	H	Z	Z	Z	H

Note) Z : High Impedance
Input Threshold Voltage : V_{TL}=0.8V, T_{TH}=3V

☐ TEST CIRCUIT

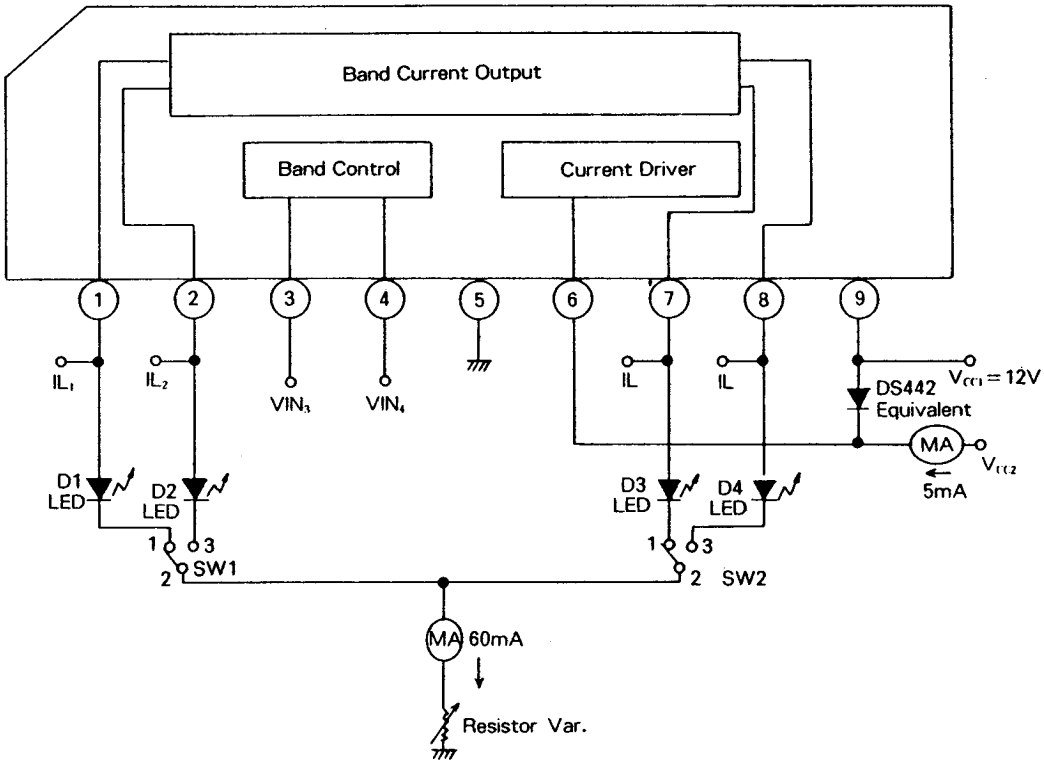

☐ SWITCH OPERATION

Characteristics \ Switch	SW1	SW2	VIN3	VIN4	Test Point
V_1 (sat)	1	Open	L	L	V_{9-1}
I_2, I_7, I_8 (leak)	Open	Open			IL_2, IL_7, IL_8
V_2 (sat)	3	Open	H	L	V_{9-2}
I_1, I_7, I_8 (leak)	Open	Open			IL_7, IL_7, IL_8
V_7 (sat)	Open	1	L	H	V_{9-7}
I_1, I_2, I_8 (leak)	Open	Open			IL_1, IL_2, IL_8
V_8 (sat)	Open	3	H	H	V_{9-7}
I_1, I_2, I_7 (leak)	Open	Open			IL_1, IL_2, IL_7
V_{TH}	1	1	L	H−L	V_4(D1 LED ON)
V_{TL}	1	1	L	L−H	V_4(D3 LED ON)

☐ APPLICATION CIRCUIT

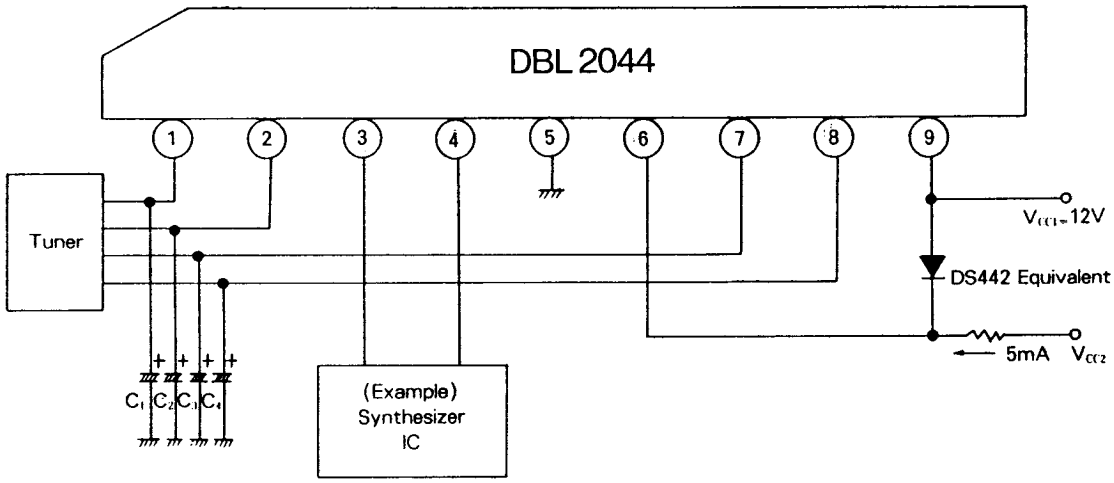

Note) Proper cares in using the IC

1. When using a capacitive load, connect a diode across pins 6 and 9 as shown above.
2. The value of load capacitors C_1, C_2, C_3, C_4 must not exceed 22uF.
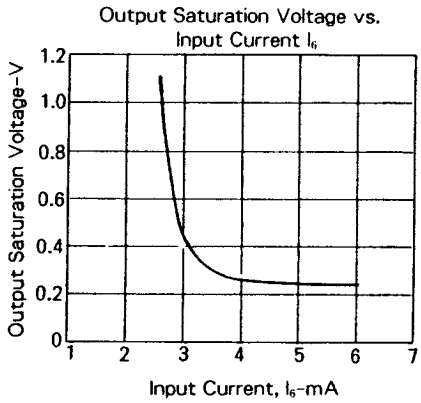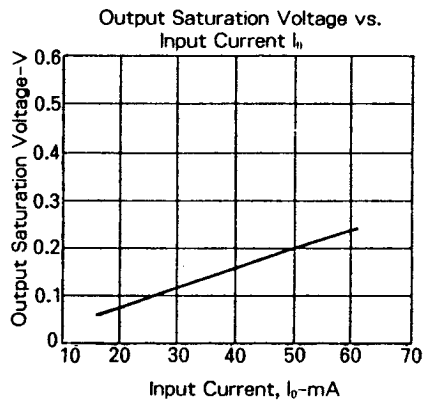
☐ TYPICAL PERFORMANCE CHARACTERISTICS