查询DBL5018供应商 捷多邦，专业PCB打样工厂，24小时加急出货

DBL 5018

LOW POWER NARROW BAND FM IF

The DBL5018 is designed for use in FM dual conversion communication.

It contains a complete narrow band FM demodualation system operable to less than 2.0V supply voltage. This low-power narrow-band FM IF system provides the second converter, second IF, demodulator. Filter Amp and squelch circuitry for communications and scanning receivers.

16DIP Unit : mm

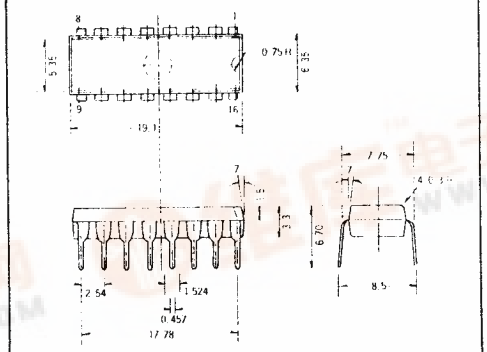

16SOP DBL5018-V

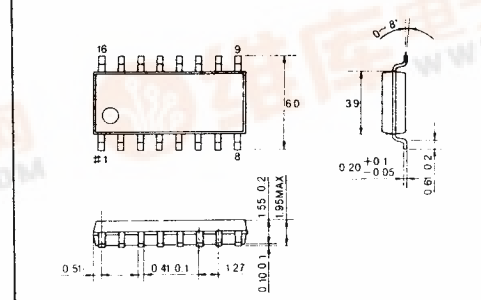

☐ FEATURES

- ○ Operating voltage range : 2.0V~8.0V
- ○ Low Current Consumption I_{CC}=4.0mA Typ. (V_{CC}=4.0V)
- ○ Excellent input sensitivity (−3dB Limiting=2.0μVrms Typ.)
- ○ Low number of external parts required
- ○ Operating frequency up to 60MHZ

☐ MAXIMUM RATINGS(T_a=25℃)

Characteristics	Symbol	Rating	Unit
Maximum Supply voltage	$V_{CC(MAX)}$	10	V
Supply Voltage Range	V_{CC}	2.0~8.0	V
Detector input Voltage	$V_{IN(DET)}$	1.0	V_{p-p}
RF Input Voltage(V_{CC}≥4.0v)	$V_{IN(RF)}$	1.0	V_{rms}
Mute Function	V_{MUTE}	−0.5~+5.0	V_{peak}
Operating Temperature	T_{opr}	−2.0~+70	℃
Storage Temperature	T_{stg}	−65~+150	℃

找PDF 维库一下 pdf.dzsc.com

DBL 5018

☐ PIN CONFIGURATION

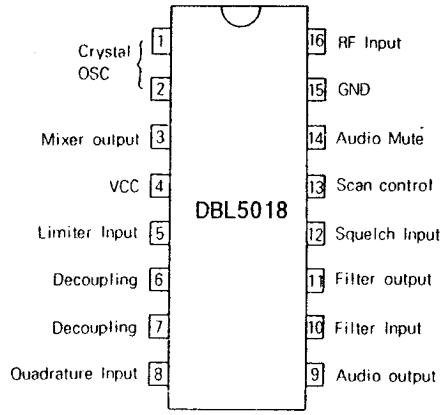

☐ BLOCK DIAGRAM AND TEST CIRCUIT

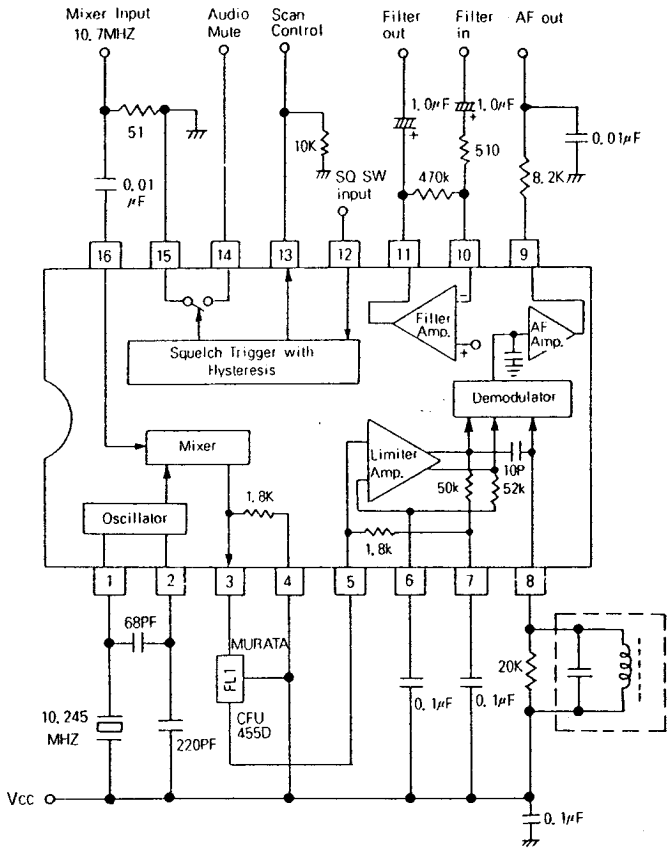

APPLICATION CIRCUIT

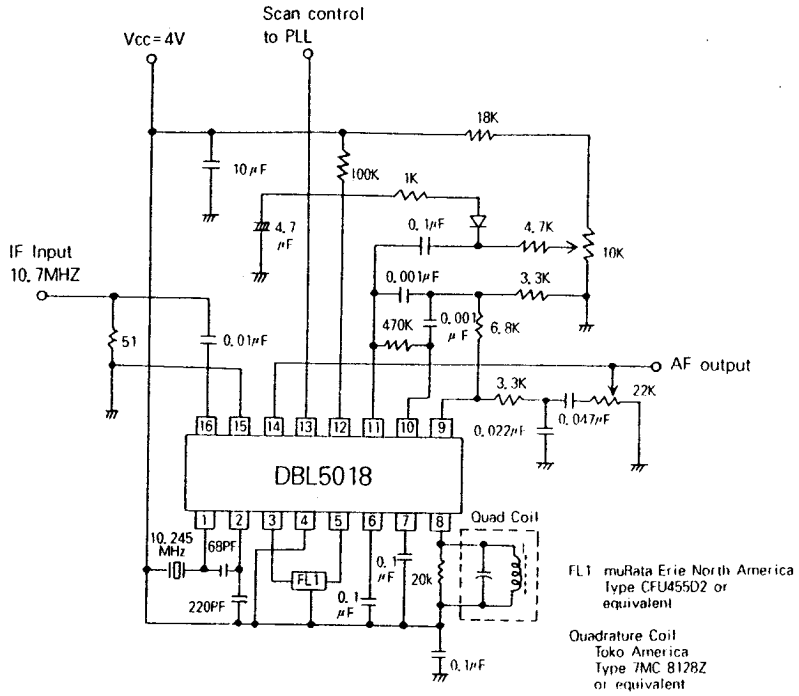

TYPICAL PERFORMANCE CHARACTERISTICS

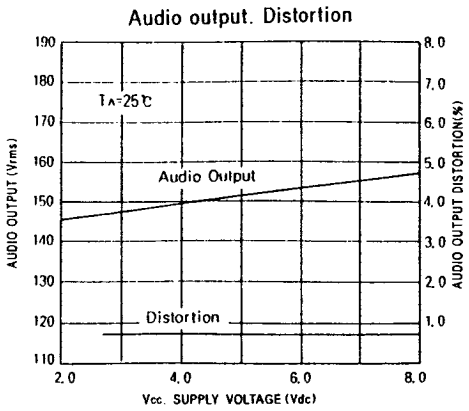

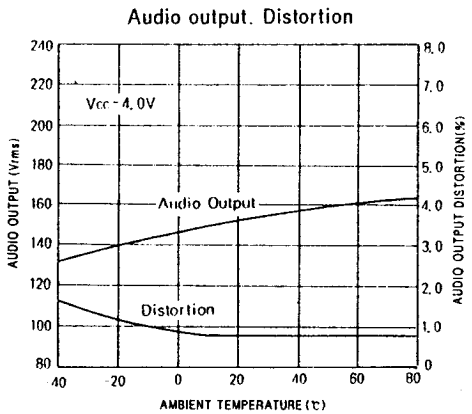

APPLICATION CIRCUIT

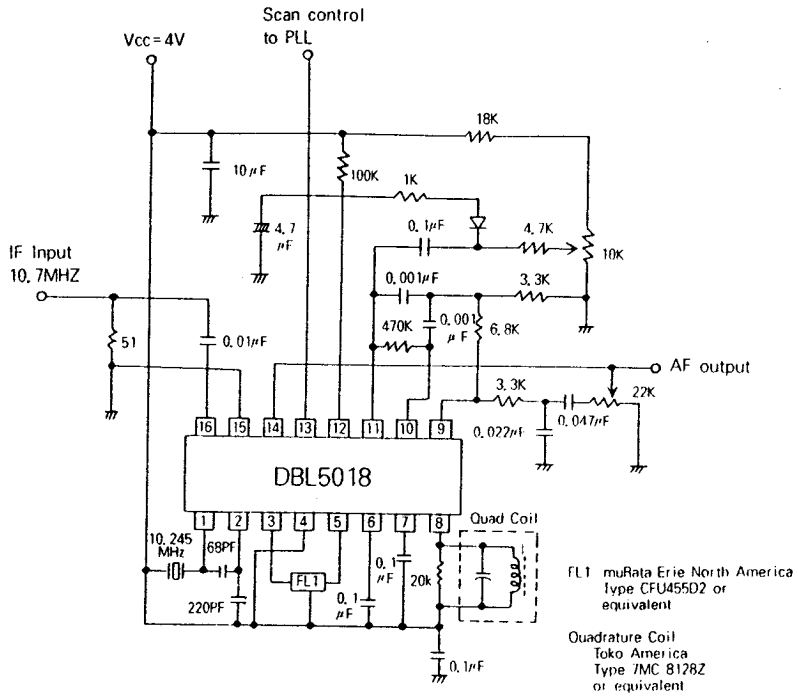

TYPICAL PERFORMANCE CHARACTERISTICS

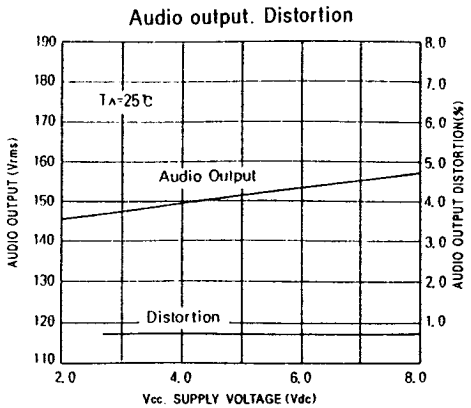

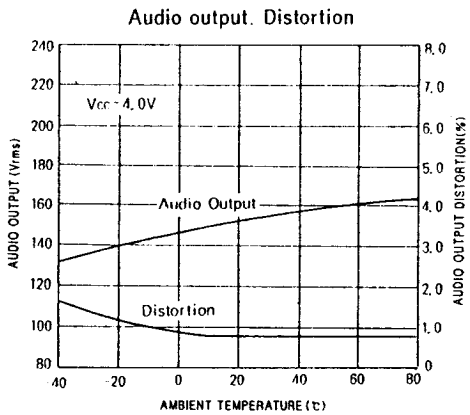

☐ TYPICAL PERFORMANCE CHARACTERISTICS

Input Limiting Voltage

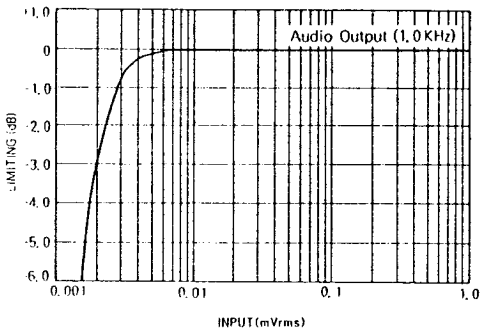

Overall Gain. Noise. and A.M Rejection

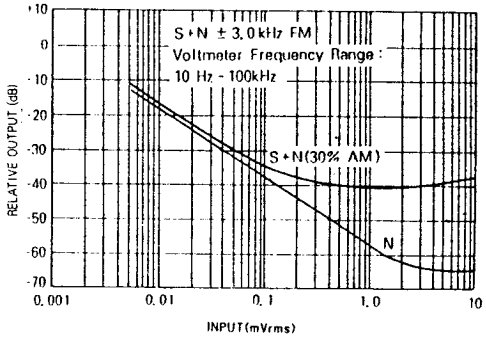

Filter AMP Response

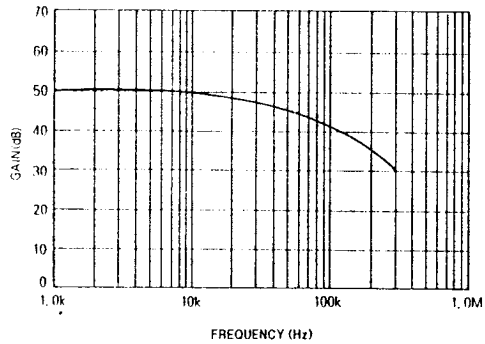

Filter AMP Gain

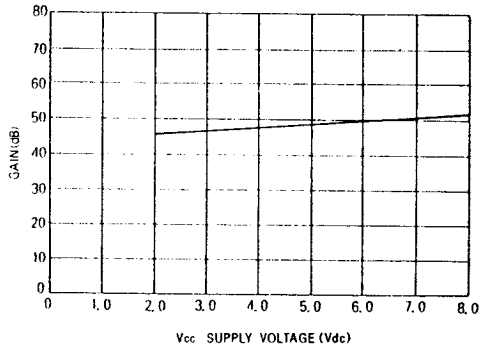
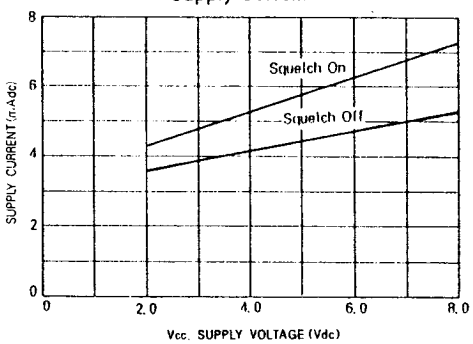
Supply Current