查询DE475-501N44A供应商 捷多邦，专业PCB打样工厂，24小时加急出货

Directed Energy, Inc.
An IXYS Company

DE475-501N44A
RF Power MOSFET

Preliminary Data Sheet

- N-Channel Enhancement Mode
- Low Q_g and R_g
- High dv/dt
- Nanosecond Switching
- 30MHz Maximum Frequency

V_{DSS}	=	500 V
I_{D25}	=	44 A
$R_{DS(on)}$	=	0.14 Ω
P_{DHS}	=	600W

Symbol	Test Conditions	Maximum Ratings	
V_{DSS}	T_J = 25°C to 150°C	500	V
V_{DGR}	T_J = 25°C to 150°C; R_{GS} = 1 MΩ	500	V
V_{GS}	Continuous	±20	V
V_{GSM}	Transient	±30	V
I_{D25}	T_c = 25°C	44	A
I_{DM}	T_c = 25°C, pulse width limited by T_{JM}	264	A
I_{AR}	T_c = 25°C	44	A
E_{AR}	T_c = 25°C	30	mJ
dv/dt	$I_S \le I_{DM}$, di/dt ≤ 100A/µs, $V_{DD} \le V_{DSS}$, $T_j \le$ 150°C, R_G = 0.2Ω	5	V/ns
	I_S = 0	>200	V/ns
P_{DHS}	T_c = 25°C Derate 4.4W/°C above 25°C	600	W
P_{DAMB}	T_c = 25°C	4.5	W
T_J		-55…+150	°C
T_{JM}		150	°C
T_{stg}		-55…+150	°C
T_L	1.6mm (0.063 in) from case for 10 s	300	°C
Weight		3	g

Symbol	Test Conditions	Characteristic Values T_J = 25°C unless otherwise specified min.	typ.	max.	
V_{DSS}	V_{GS} = 0 V, I_D = 3 ma	500			V
$V_{GS(th)}$	$V_{DS} = V_{GS}$, I_D = 4 ma	2.5		5.5	V
I_{GSS}	V_{GS} = ±20 V_{DC}, V_{DS} = 0			±100	nA
I_{DSS}	V_{DS} = 0.8 V_{DSS} T_J = 25°C V_{GS} = 0 T_J = 125°C			50 1	µA mA
$R_{DS(on)}$	V_{GS} = 15 V, $I_D = 0.5 I_{D25}$ Pulse test, t ≤ 300µS, duty cycle d ≤ 2%			0.14	Ω
g_{fs}	V_{DS} = 15 V, $I_D = 0.5 I_{D25}$, pulse test		32		S

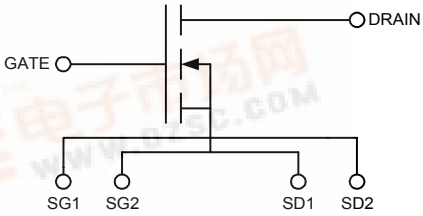

Features

- Isolated Substrate
  - high isolation voltage (>2500V)
  - excellent thermal transfer
  - Increased temperature and power cycling capability
- IXYS advanced low Q_g process
- Low gate charge and capacitances
  - easier to drive
  - faster switching
- Low $R_{DS(on)}$
- Very low insertion inductance (<2nH)
- No beryllium oxide (BeO) or other hazardous materials

Advantages

- Optimized for RF and high speed switching at frequencies to 30MHz
- Easy to mount—no insulators needed
- High power density

找PDF 维库一下 pdf.dzsc.com

Symbol	Test Conditions	Characteristic Values (T_J = 25°C unless otherwise specified) min.	typ.	max.	
R_G			0.3		Ω
C_{iss}			5500		pF
C_{oss}	V_{GS} = 0 V, V_{DS} = 0.8 $V_{DSS(max)}$, f = 1 MHz		990		pF
C_{rss}			330		pF
$T_{d(on)}$			5		ns
T_{on}	V_{GS} = 15 V, V_{DS} = 0.8 V_{DSS} I_D = 0.5 I_{DM}		5		ns
$T_{d(off)}$	R_G = 0.2 Ω (External)		5		ns
T_{off}			8		ns
$Q_{g(on)}$			162		nC
Q_{gs}	V_{GS} = 10 V, V_{DS} = 0.5 V_{DSS} I_D = 0.5 I_{D25}		56		nC
Q_{gd}			70		nC
R_{thJHS}			0.20		K/W

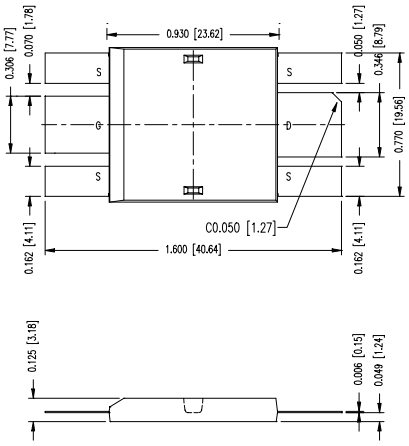

Source-Drain Diode

Symbol	Test Conditions	Characteristic Values (T_J = 25°C unless otherwise specified) min.	typ.	max.	
I_S	V_{GS} = 0 V			44	A
I_{SM}	Repetitive; pulse width limited by T_{JM}			264	A
V_{SD}	I_F = I_S, V_{GS} = 0 V, Pulse test, t ≤ 300 µs, duty cycle ≤ 2%			1.5	V
T_{rr}			200		ns
Q_{RM}	I_F = I_S, -di/dt = 100A/µs, V_R = 100V		0.6		µC
I_{RM}			14		A

For detailed device mounting and installation instructions, see the "*DE-Series MOSFET Mounting Instructions*" technical note on DEI's web site at www.directedenergy.com/apptech.htm

Directed Energy, Inc. reserves the right to change limits, test conditions and dimensions.
DEI MOSFETS are covered by one or more of the following U.S. patents:

4,835,592	4,850,072	4,881,106	4,891,686	4,931,844	5,017,508
5,034,796	5,049,961	5,063,307	5,187,117	5,237,481	5,486,715
5,381,025	5,640,045				

501N44A DE-SERIES SPICE Model (Preliminary)

The DE-SERIES SPICE Model is illustrated in Figure 1. The model is an expansion of the SPICE level 3 MOSFET model. It includes the stray inductive terms L_G, L_S and L_D. Rd is the $R_{DS(ON)}$ of the device, Rds is the resistive leakage term. The output capacitance, C_{OSS}, and reverse transfer capacitance, C_{RSS} are modeled with reversed biased diodes. This provides a varactor type response necessary for a high power device model. The turn on delay and the turn off delay are adjusted via Ron and Roff.

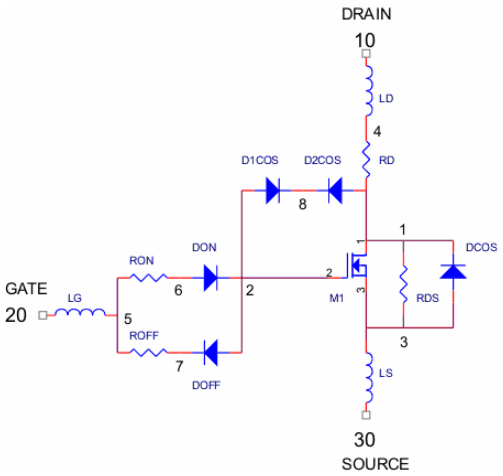

Figure 1 DE-SERIES SPICE Model

This SPICE model may be downloaded as a text file from the DEI web site at www.directedenergy.com/spice.htm

Net List:

```
.SUBCKT 501N44A   10 20 30
*  TERMINALS:  D  G  S
*  500 Volt  44 Amp  0.14 ohm  N-Channel Power MOSFET
*  REV.A  01-09-02
M1   1  2  3  3  DMOS L=1U W=1U
RON   5  6  0.3
DON   6  2  D1
ROF   5  7 .1
DOF   2  7  D1
D1CRS 2  8  D2
D2CRS 1  8  D2
CGS   2  3  5.5N
RD    4  1  0.15
DCOS  3  1  D3
RDS   1  3  5.0MEG
LS    3  30 .5N
LD   10  4  1N
LG   20  5  1N
.MODEL DMOS NMOS (LEVEL=3 VTO=3.0 KP=3.8)
.MODEL D1 D (IS=.5F CJO=1P BV=100 M=.5 VJ=.6 TT=1N)
.MODEL D2 D (IS=.5F CJO=400P BV=1000 M=.4 VJ=.6 TT=400N RS=10M)
.MODEL D3 D (IS=.5F CJO=900P BV=1000 M=.3 VJ=.4 TT=400N RS=10M)
.ENDS
```

Doc #9200-0248 Rev 1
© 2002 Directed Energy, Inc.

Directed Energy, Inc.
An IXYS Company
2401 Research Blvd., Suite 108
Fort Collins, CO USA 80526
970-493-1901 Fax: 970-493-1903
Email: deiinfo@directedenergy.com
Web: http://www.directedenergy.com