查询DG186供应商 捷多邦，专业PCB打样工厂，24小时加急出货

High-Speed Drivers with SPDT JFET Switches

FEATURES

- Constant On-Resistance Over Entire Analog Range
- Low Leakage
- Low Crosstalk
- Rad Hardness

BENEFITS

- Low Distortion
- Eliminates Large Signal Errors
- High Precision
- High Bandwidth Capability
- Fault Protection

APPLICATIONS

- Audio Switching
- Video Switching
- Sample/Hold
- Guidance and Control Systems
- Telemetry

DESCRIPTION

The DG186/187/188 are precision single-pole, double-throw (SPDT) analog switches designed to provide accurate switching of video and audio signals. This series is ideally suited for applications requiring a constant on-resistance over the entire analog range.

The major difference in the devices is the on-resistance (DG186—10 Ω, DG187—30 Ω, DG188—75 Ω). Reduced errors are achieved through low leakage current ($I_{D(on)}$ < 2 nA). Applications which benefit from the flat JFET on-resistance include audio switching, video switching, and data acquisition.

To achieve fast and accurate switch performance, each device comprises two n-channel JFET transistors and a TTL compatible bipolar driver. The driver is designed to achieve break-before-make switching action, eliminating the inadvertent shorting between channels and the crosstalk which would result. In the on state, each switch conducts current equally well in either direction. In the off condition, the switches will block up to 20 V peak-to-peak, with feedthrough of less than –60 dB at 10 MHz.

FUNCTIONAL BLOCK DIAGRAM AND PIN CONFIGURATION

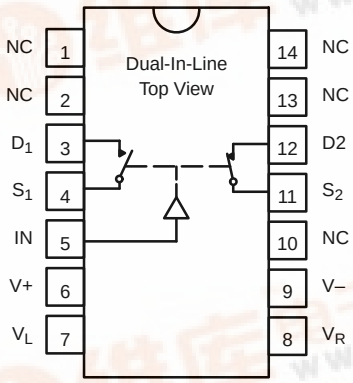

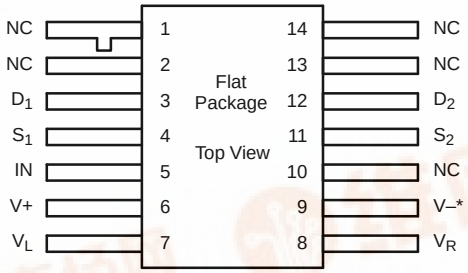

Refer to JAN38510 Information, Military Section

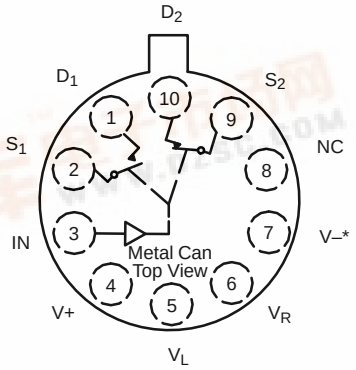

*COMMON TO SUBSTRATE AND CASE

TRUTH TABLE

Logic	SW_1	SW_2
0	OFF	ON
1	ON	OFF

Logic "0" ≤ 0.8 V
Logic "1" ≥ 2.0 V

找PDF 维库一下 pdf.dzsc.com

ORDERING INFORMATION		
Temp Range	**Package**	**Part Number**
–55 to 125°C	10-Pin Metal Can	DG186AA/883
		DG187AA/883, JM38510/11105BIA
		DG188AA/883, JM38510/11106BIA
	14-Pin Sidebraze	DG186AP/883
		DG187AP/883, JM38510/11105BCA
		DG188AP
		DG188AP/883, JM38510/11106BCA
	14-Pin Flat Pack	JM38510/11105BXA
		JM38510/11106BXA

ABSOLUTE MAXIMUM RATINGS

V+ to V– . . . . . 36 V
V+ to V_D . . . . . 33 V
V_D to V– . . . . . 33 V
V_D to V_D . . . . . ±22 V
V_L to V– . . . . . 36 V
V_L to V_{IN} . . . . . 8 V
V_L to V_R . . . . . 8 V
V_{IN} to V_R . . . . . 8 V
V_R to V– . . . . . 27 V
V_R to V_{IN} . . . . . 2 V
Current (S or D) DG186 . . . . . 200 mA
Current (S or D) DG187, DG188 . . . . . 30 mA
Current (All Other Pins) . . . . . 30 mA
Storage Temperature . . . . . –65 to 150°C
Power Dissipation[a]
10-Pin Metal Can[b] . . . . . 450 mW
14-Pin Sidebraze[c] . . . . . 825 mW
14-Pin Flat Pack[d] . . . . . 900 mW

Notes:
a. All leads welded or soldered to PC Board.
b. Derate 6 mW/°C above 75°C
c. Derate 11 mW/°C above 75°C
d. Derate 10 mW/°C above 75°C

SCHEMATIC DIAGRAM (TYPICAL CHANNEL)

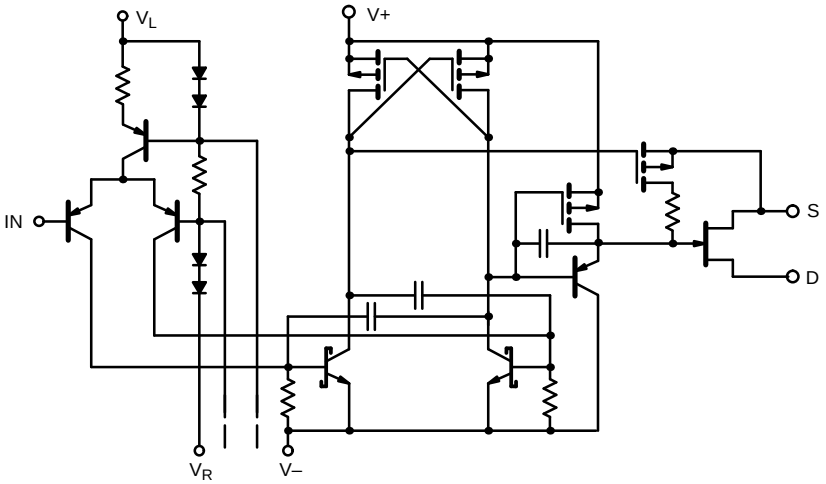

FIGURE 1.

SPECIFICATIONS[a] For DG186

Parameter	Symbol	Test Conditions Unless Specified V+ = 15 V, V– = –15 V, V_L = 5 V V_R = 0 V, V_{IN} = 0.8 or 2 V[f]		Temp[b]	Limits Min[d]	Limits Typ[c]	Limits Max[d]	Unit
Analog Switch								
Analog Signal Range[e]	V_{ANALOG}			Full	–7.5		15	V
Drain-Source On-Resistance	$r_{DS(on)}$	I_S = –10 mA, V_D = –7.5 V		Room Full		7.5	10 20	Ω
Source Off Leakage Current	$I_{S(off)}$	V_S = ±10 V, V_D = ∓10 V V+ = 10 V, V– = –20 V		Room Hot		0.05	10 1000	nA
		V_S = ±7.5 V, V_D = ∓7.5 V		Room Hot		0.05	10 1000	
Drain Off Leakage Current	$I_{D(off)}$	V_S = ±10 V, V_D = ∓10 V V+ = 10 V, V– = –20 V		Room Hot		0.04	10 1000	
		V_S = ±7.5 V, V_D = ∓7.5 V		Room Hot		0.03	10 1000	
Channel On Leakage Current	$I_{D(on)}$	V_D = V_S = ±7.5 V		Room Hot	–2 –200	–0.1		
Saturation Drain Current	I_{DSS}	2 ms Pulse Duration		Room		300		mA
Digital Input								
Input Current with Input Voltage High	I_{INH}	V_{IN} = 5 V		Room Hot		<0.01	10 20	µA
Input Current with Input Voltage Low	I_{INL}	V_{IN} = 0 V		Full	–250	–30		
Dynamic Characteristics								
Turn-On Time	t_{on}	See Switching Time Test Circuit		Room		240	400	ns
Turn-Off Time	t_{off}			Room		140	200	
Source-Off Capacitance	$C_{S(off)}$	f = 1 MHz	V_S = –5 V, I_D = 0	Room		21		pF
Drain-Off Capacitance	$C_{D(off)}$		V_D = –5 V, I_S = 0	Room		17		
Channel-On Capacitance	$C_{D(on)}$		V_D = V_S = 0 V	Room		17		
Off Isolation	OIRR	f = 1 MHz, R_L = 75 Ω		Room		>55		dB
Power Supplies								
Positive Supply Current	I+	V_{IN} = 0 V, or 5 V		Room			0.8	mA
Negative Supply Current	I–			Room	–3			
Logic Supply Current	I_L			Room			3.2	
Reference Supply Current	I_R			Room	–2			

Notes:
a. Refer to PROCESS OPTION FLOWCHART.
b. Room = 25°C, Full = as determined by the operating temperature suffix.
c. Typical values are for DESIGN AID ONLY, not guaranteed nor subject to production testing.
d. The algebraic convention whereby the most negative value is a minimum and the most positive a maximum, is used in this data sheet.
e. Guaranteed by design, not subject to production test.
f. V_{IN} = input voltage to perform proper function.

SPECIFICATIONS[a] For DG187							
Parameter	Symbol	Test Conditions Unless Specified V+ = 15 V, V– = –15 V, V_L = 5 V V_R = 0 V, V_{IN} = 0.8 or 2 V[f]	Temp[b]	Limits Min[d]	Typ[c]	Max[d]	Unit
Analog Switch							
Analog Signal Range[e]	V_{ANALOG}		Full	–7.5		15	V
Drain-Source On-Resistance	$r_{DS(on)}$	I_S = –10 mA, V_D = –7.5 V	Room Full		22	30 60	Ω
Source Off Leakage Current	$I_{S(off)}$	V_S = ±10 V, V_D = ∓10 V V+ = 10 V, V– = –20 V	Room Hot		0.06	1 100	nA
		V_S = ±7.5 V, V_D = ∓7.5 V	Room Hot		0.13	1 100	
Drain Off Leakage Current	$I_{D(off)}$	V_S = ±10 V, V_D = ∓10 V V+ = 10 V, V– = –20 V	Room Hot		0.04	1 100	
		V_S = ±7.5 V, V_D = ∓7.5 V	Room Hot		0.03	1 100	
Channel On Leakage Current	$I_{D(on)}$	V_D = V_S = ±7.5 V	Room Hot	–2 –200	–0.02		
Digital Input							
Input Current with Input Voltage High	I_{INH}	V_{IN} = 5 V	Room Hot		<0.01	10 20	μA
Input Current with Input Voltage Low	I_{INL}	V_{IN} = 0 V	Full	–250	–30		
Dynamic Characteristics							
Turn-On Time	t_{on}	See Switching Time Test Circuit	Room		85	150	ns
Turn-Off Time	t_{off}		Room		95	130	
Source-Off Capacitance	$C_{S(off)}$	f = 1 MHz; V_S = –5 V, I_D = 0	Room		9		pF
Drain-Off Capacitance	$C_{D(off)}$	f = 1 MHz; V_D = –5 V, I_S = 0	Room		6		
Channel-On Capacitance	$C_{D(on)}$	f = 1 MHz; V_D = V_S = 0 V	Room		14		
Off Isolation	OIRR	f = 1 MHz, R_L = 75 Ω	Room		>50		dB
Power Supplies							
Positive Supply Current	I+	V_{IN} = 0 V, or 5 V	Room			0.8	mA
Negative Supply Current	I–		Room	–3			
Logic Supply Current	I_L		Room			3.2	
Reference Supply Current	I_R		Room	–2			

Notes:
a. Refer to PROCESS OPTION FLOWCHART.
b. Room = 25°C, Full = as determined by the operating temperature suffix.
c. Typical values are for DESIGN AID ONLY, not guaranteed nor subject to production testing.
d. The algebraic convention whereby the most negative value is a minimum and the most positive a maximum, is used in this data sheet.
e. Guaranteed by design, not subject to production test.
f. V_{IN} = input voltage to perform proper function.

SPECIFICATIONS[a] For DG188							
Parameter	Symbol	Test Conditions Unless Otherwise Specified V+ = 15 V, V– = –15 V, V_L = 5 V V_R = 0 V, V_{IN} = 0.8 or 2 V[f]	Temp[b]	Limits Min[d]	Typ[c]	Max[d]	Unit
Analog Switch							
Analog Signal Range[e]	V_{ANALOG}		Full	–10		15	V
Drain-Source On-Resistance	$r_{DS(on)}$	I_S = –10 mA, V_D = –7.5 V	Room Full		35	75 150	Ω
Source Off Leakage Current	$I_{S(off)}$	V_S = ±10 V, V_D = ∓10 V V+ = 10 V, V– = –20 V	Room Hot		0.05	1 100	nA
		V_S = ±10 V, V_D = ∓10 V	Room Hot		0.07	1 100	
Drain Off Leakage Current	$I_{D(off)}$	V_S = ±10 V, V_D = ∓10 V V+ = 10 V, V– = –20 V	Room Hot		0.04	1 100	
		V_S = ±10 V, V_D = ∓10 V	Room Hot		0.50	1 100	
Channel On Leakage Current	$I_{D(on)}$	V_D = V_S = ±10 V	Room Hot	–2 –200	–0.03		
Digital Input							
Input Current with Input Voltage High	I_{INH}	V_{IN} = 5 V	Room Hot		<0.01	10 20	µA
Input Current with Input Voltage Low	I_{INL}	V_{IN} = 0 V	Full	–250	–30		
Dynamic Characteristics							
Turn-On Time	t_{on}	See Switching Time Test Circuit	Room		120	250	ns
Turn-Off Time	t_{off}		Room		100	130	
Source-Off Capacitance	$C_{S(off)}$	f = 1 MHz; V_S = –5 V, I_D = 0	Room		9		pF
Drain-Off Capacitance	$C_{D(off)}$	f = 1 MHz; V_D = –5 V, I_S = 0	Room		6		
Channel-On Capacitance	$C_{D(on)}$	f = 1 MHz; V_D = V_S = 0 V	Room		14		
Off Isolation	OIRR	f = 1 MHz, R_L = 75 Ω	Room		>50		dB
Power Supplies							
Positive Supply Current	I+	V_{IN} = 0 V, or 5 V	Room			0.8	mA
Negative Supply Current	I–		Room	–3			
Logic Supply Current	I_L		Room			3.2	
Reference Supply Current	I_R		Room	–2			

Notes:
a. Refer to PROCESS OPTION FLOWCHART.
b. Room = 25°C, Full = as determined by the operating temperature suffix.
c. Typical values are for DESIGN AID ONLY, not guaranteed nor subject to production testing.
d. The algebraic convention whereby the most negative value is a minimum and the most positive a maximum, is used in this data sheet.
e. Guaranteed by design, not subject to production test.
f. V_{IN} = input voltage to perform proper function.

TYPICAL CHARACTERISTICS (25°C UNLESS NOTED)

Supply Current vs. Temperature

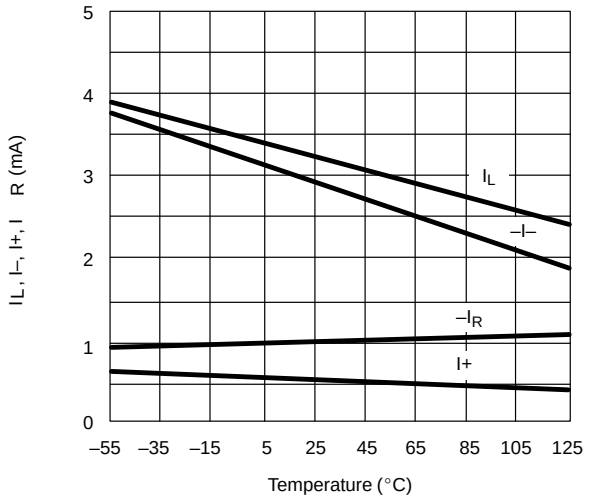

I_{IN} vs. V_{IN} and Temperature

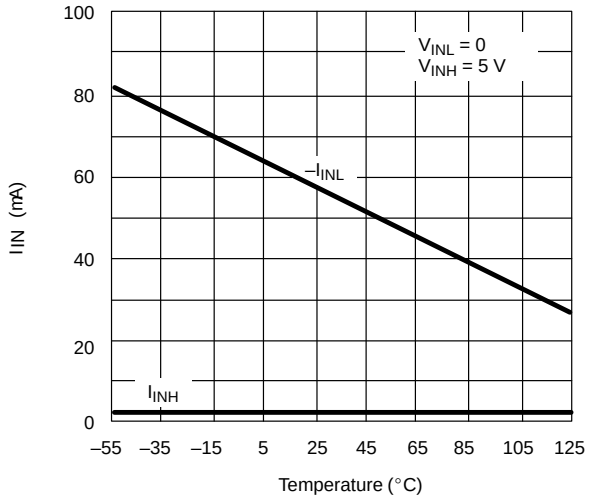

$r_{DS(on)}$ vs. Temperature

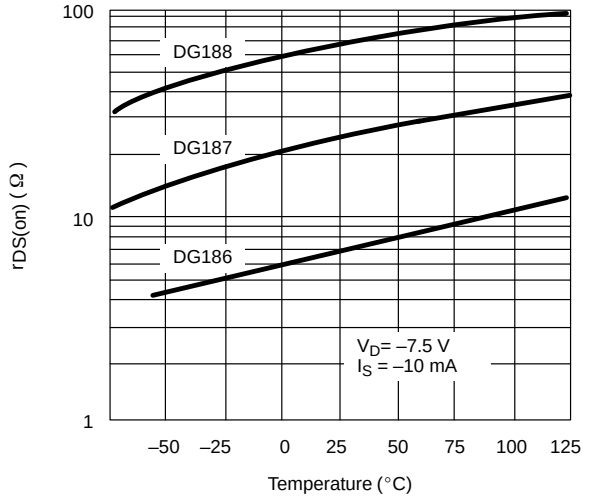

Switching Time vs. V_D and Temperature (DG186)

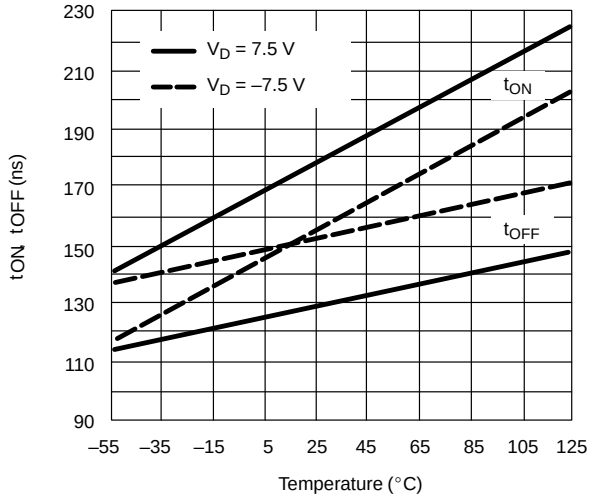

Leakage vs. Temperature (DG186)

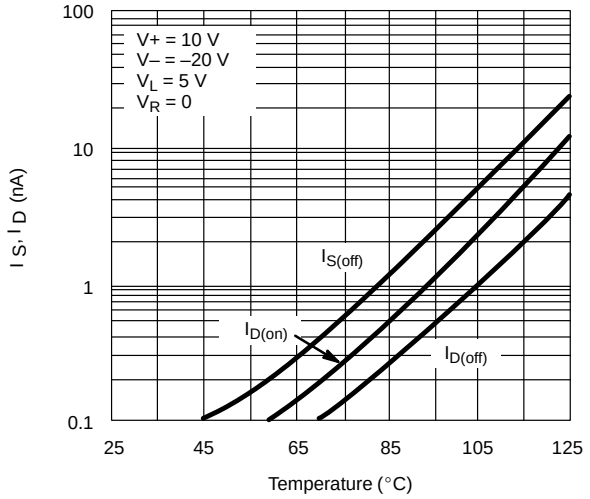

Switching Time vs. V_D and Temperature (DG187/188)

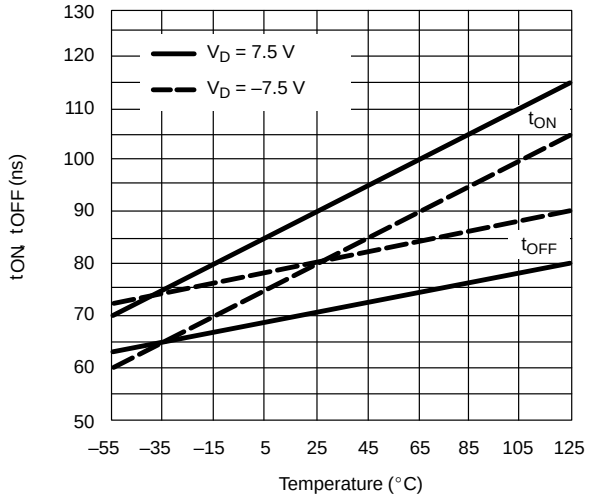

TYPICAL CHARACTERISTICS (25°C UNLESS NOTED)

$I_{D(off)}$ vs. Temperature (DG187/188)

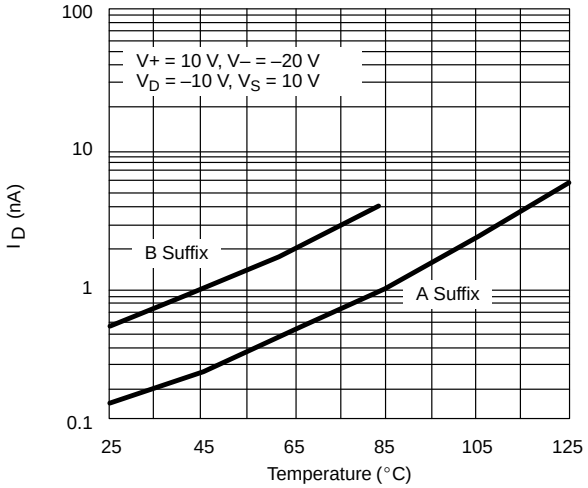

Capacitance vs. V_D or V_S (DG186)

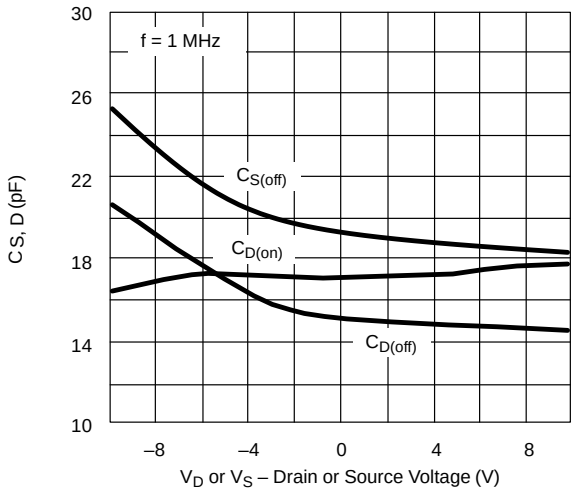

Capacitance vs. V_D or V_S (DG187/188)

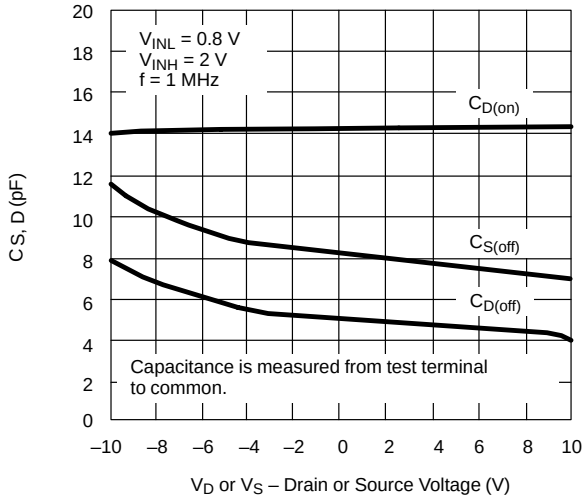

Off Isolation vs. Frequency

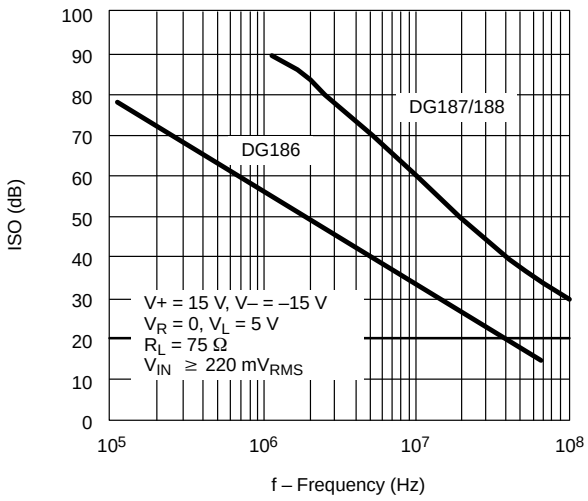

TEST CIRCUITS

Feedthrough due to charge injection may result in spikes at the leading and trailing edge of the output waveform.

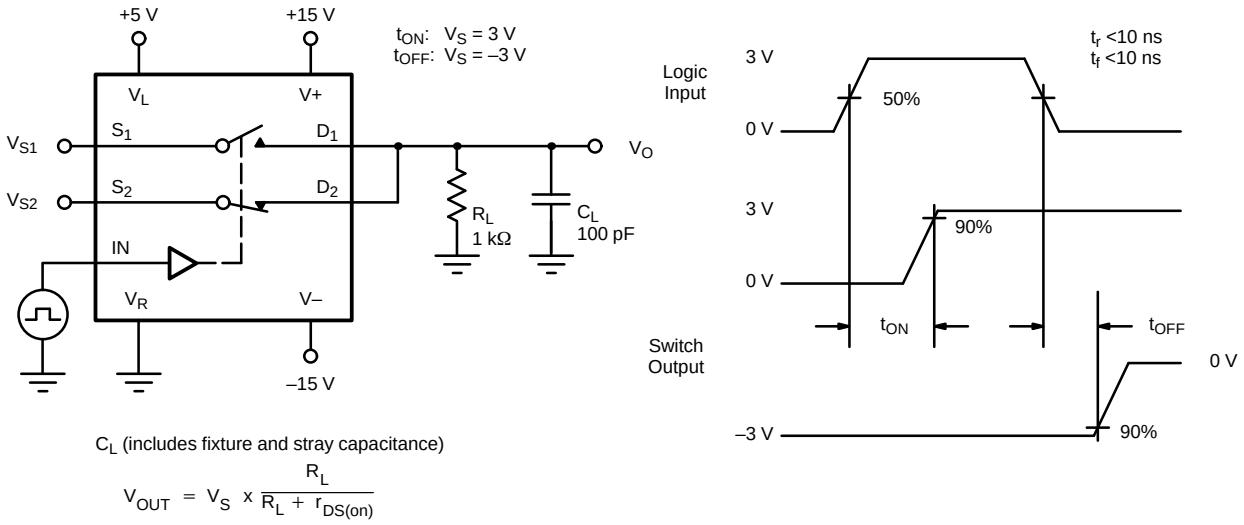

FIGURE 2. Switching Time

APPLICATION HINTS[a]

Switch	V+ Positive Supply Voltage (V)	V– Negative Supply Voltage (V)	V_L Logic Supply Voltage (V)	V_R Reference Supply Voltage (V)	V_{IN} Logic Input Voltage $V_{INH(min)}/V_{INL(max)}$ (V)	V_S Analog Voltage Range (V)
DG186 DG187	15[b]	–15	5	GND	2.0/0.8	–7.5 to 15
	10	–20	5	GND	2.0/0.8	–12.5 to 10
	12	–12	5	GND	2.0/0.8	–4.5 to 12
DG188	15[b]	–15	5	GND	2.0/0.8	–10 to 15
	10	–20	5	GND	2.0/0.8	–15 to 10
	12	–12	5	GND	2.0/0.8	–7 to 12

Notes:
a. Application Hints are for DESIGN AID ONLY, not guaranteed and not subject to production testing.
b. Electrical Parameter Chart based on V+ = 15 V, V_L = 5 V, V_R = GND