查询DG408供应商 捷多邦，专业PCB打样工厂，24小时加急出货

Data Sheet June 1999 File Number 3283.5

Single 8-Channel/Differential 4-Channel, CMOS Analog Multiplexers

The DG408 Single 8-Channel, and DG409 Differential 4-Channel monolithic CMOS analog multiplexers are drop-in replacements for the popular DG508A and DG509A series devices. They each include an array of eight analog switches, a TTL/CMOS compatible digital decode circuit for channel selection, a voltage reference for logic thresholds and an ENABLE input for device selection when several multiplexers are present.

The DG408 and DG409 feature lower signal ON resistance (<100Ω) and faster switch transition time (t_{TRANS} < 250ns) compared to the DG508A or DG509A. Charge injection has been reduced, simplifying sample and hold applications. The improvements in the DG408 series are made possible by using a high-voltage silicon-gate process. An epitaxial layer prevents the latch-up associated with older CMOS technologies. Power supplies may be single-ended from +5V to +34V, or split from ±5V to ±20V.

The analog switches are bilateral, equally matched for AC or bidirectional signals. The ON resistance variation with analog signals is quite low over a ±5V analog input range.

Ordering Information

PART NUMBER	TEMP. RANGE (^{o}C)	PACKAGE	PKG. NO.
DG408DJ	-40 to 85	16 Ld PDIP	E16.3
DG408DY	-40 to 85	16 Ld SOIC	M16.15
DG409DJ	-40 to 85	16 Ld PDIP	E16.3
DG409DY	-40 to 85	16 Ld SOIC	M16.15

Features

- ON Resistance (Max, 25°C) 100Ω
- Low Power Consumption (P_D) . . . . . <11mW
- Fast Switching Action
  - t_{TRANS} . . . . . <250ns
  - $t_{ON/OFF(EN)}$ . . . . . <150ns
- Low Charge Injection
- Upgrade from DG508A/DG509A
- TTL, CMOS Compatible
- Single or Split Supply Operation

Applications

- Data Acquisition Systems
- Audio Switching Systems
- Automatic Testers
- Hi-Rel Systems
- Sample and Hold Circuits
- Communication Systems
- Analog Selector Switch

Pinouts

DG408 (PDIP, SOIC)
TOP VIEW

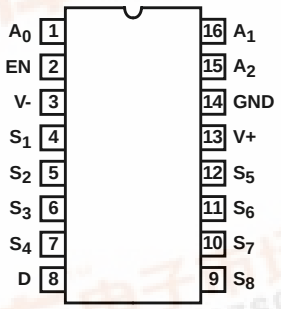

DG409 (PDIP, SOIC)
TOP VIEW

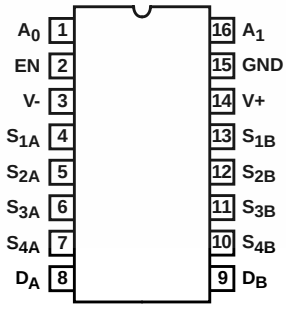

找PDF 维库一下 pdf.dzsc.com

CAUTION: These devices are sensitive to electrostatic discharge; follow proper IC Handling Procedures.

Functional Block Diagrams

DG408

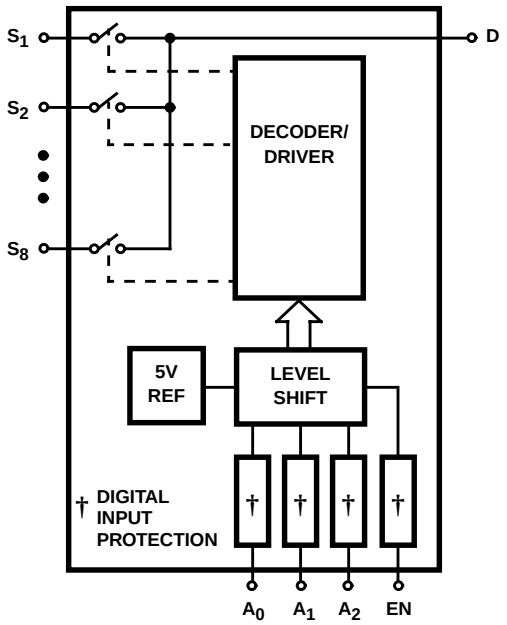

DG409

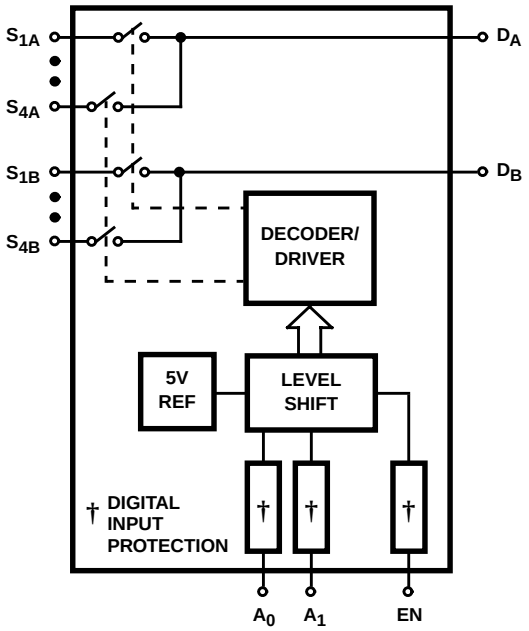

TRUTH TABLE DG408

A_2	A_1	A_0	EN	ON SWITCH
X	X	X	0	NONE
0	0	0	1	1
0	0	1	1	2
0	1	0	1	3
0	1	1	1	4
1	0	0	1	5
1	0	1	1	6
1	1	0	1	7
1	1	1	1	8

TRUTH TABLE DG409

A_1	A_0	EN	ON SWITCH
X	X	0	NONE
0	0	1	1
0	1	1	2
1	0	1	3
1	1	1	4

NOTES:

1. V_{AH} Logic “1” ≥2.4V.
2. V_{AL} Logic “0” ≤0.8V.

Pin Descriptions - (DG408)

PIN	SYMBOL	DESCRIPTION
1	A_0	Logic Decode Input (Bit 0, LSB)
2	EN	Enable Input
3	V-	Negative Power Supply Terminal
4	S_1	Source (Input) for Channel 1
5	S_2	Source (Input) for Channel 2
6	S_3	Source (Input) for Channel 3
7	S_4	Source (Input) for Channel 4
8	D	Drain (Output)
9	S_8	Source (Input) for Channel 8
10	S_7	Source (Input) for Channel 7
11	S_6	Source (Input) for Channel 6
12	S_5	Source (Input) for Channel 5
13	V+	Positive Power Supply Terminal (Substrate)
14	GND	Ground Terminal (Logic Common)
15	A_2	Logic Decode Input (Bit 2, MSB)
16	A_1	Logic Decode Input (Bit 1)

Pin Descriptions - (DG409)

PIN	SYMBOL	DESCRIPTION
1	A_0	Logic Decode Input (Bit 0, LSB)
2	EN	Enable Input
3	V-	Negative Power Supply Terminal
4	S_{1A}	Source (Input) for Channel 1a
5	S_{2A}	Source (Input) for Channel 2a
6	S_{3A}	Source (Input) for Channel 3a
7	S_{4A}	Source (Input) for Channel 4a
8	D_A	Drain a (Output a)
9	D_B	Drain b (Output b)
10	S_{4B}	Source (Input) for Channel 4b
11	S_{3B}	Source (Input) for Channel 3b
12	S_{2B}	Source (Input) for Channel 2b
13	S_{1B}	Source (Input) for Channel 1b
14	V+	Positive Power Supply Terminal
15	GND	Ground Terminal (Logic Common)
16	A_1	Logic Decode Input (Bit 1, MSB)

Absolute Maximum Ratings

V+ to V- 44.0V
GND to V-. 25V
Digital Inputs, V_S, V_D (Note 3). . . . . .(V-) -2V to (V+) + 2V or 20mA, Whichever Occurs First
Continuous Current (Any Terminal) 30mA
Peak Current, S or D (Pulsed 1ms, 10% Duty Cycle Max) . . 100mA

Operating Conditions

Temperature Range . . . . . -40°C to 85°C

Thermal Information

Thermal Resistance (Typical, Note 4)	θ_{JA} (^{o}C/W)
PDIP Package	90
SOIC Package	110

Maximum Junction Temperature . . . . . .150°C
Maximum Storage Temperature Range. . . . . -65°C to 125°C
Maximum Lead Temperature (Soldering 10s) . . . . . .300°C
(SOIC - Lead Tips Only)

CAUTION: Stresses above those listed in "Absolute Maximum Ratings" may cause permanent damage to the device. This is a stress only rating and operation of the device at these or any other conditions above those indicated in the operational sections of this specification is not implied.

NOTES:

3. Signals on S_X, D_X, EN or A_X exceeding V+ or V- are clamped by internal diodes. Limit diode current to maximum current ratings.
4. θ_{JA} is measured with the component mounted on an evaluation PC board in free air.

Electrical Specifications

Test Conditions: V+ = +15V, V- = -15V, V_{AL} = 0.8V, V_{AH} = 2.4V, Unless Otherwise Specified

PARAMETER	TEST CONDITIONS	TEMP (^{o}C)	(NOTE 5) MIN	(NOTE 6) TYP	(NOTE 5) MAX	UNITS
DYNAMIC CHARACTERISTICS						
Transition Time, t_{TRANS}	(See Figure 1)	Full	-	160	250	ns
Break-Before-Make Interval, t_{OPEN}	(See Figure 3)	25	10	-	-	ns
Enable Turn-ON Time, $t_{ON(EN)}$	(See Figure 2)	25	-	115	150	ns
		Full	-	-	225	ns
Enable Turn-OFF Time, $t_{OFF(EN)}$	(See Figure 2)	Full	-	105	150	ns
Charge Injection, Q	C_L = 10nF, V_S = 0V	25	-	20	-	pC
OFF Isolation	V_{EN} = 0V, R_L = 1kΩ, f = 100kHz (Note 9)	25	-	-75	-	dB
Logic Input Capacitance, C_{IN}	f = 1MHz	25	-	8	-	pF
Source OFF Capacitance, $C_{S(OFF)}$	V_{EN} = 0V, V_S = 0V, f = 1MHz	25	-	3	-	pF
Drain OFF Capacitance, $C_{D(OFF)}$ DG408	V_{EN} = 0V, V_D = 0V, f = 1MHz	25	-	26	-	pF
DG409		25	-	14	-	pF
Drain ON Capacitance, $C_{D(ON)}$ DG408	V_{EN} = 3V, V_D = 0V, f = 1MHz, V_A = 0V or 3V	25	-	37	-	pF
DG409		25	-	25	-	pF
DIGITAL INPUT CHARACTERISTICS						
Logic Input Current, Input Voltage High, I_{AH}	V_A = 2.4V, 15V	Full	-10	-	10	µA
Logic Input Current, Input Voltage Low, I_{AL}	V_{EN} = 0V, 2.4V, V_A = 0V	Full	-10	-	10	µA
ANALOG SWITCH CHARACTERISTICS						
Analog Signal Range, V_{ANALOG}		Full	-15	-	15	V
Drain-Source ON Resistance, $r_{DS(ON)}$	V_D = ±10V, I_S = -10mA (Note 7)	25	-	40	100	Ω
		Full	-	-	125	Ω
$r_{DS(ON)}$ Matching Between Channels, $\Delta r_{DS(ON)}$	V_D = 10V, -10V (Note 8)	25	-	-	15	Ω
Source OFF Leakage Current, $I_{S(OFF)}$	V_{EN} = 0V, V_S = ±10V, V_D = ∓10V	25	-0.5	-	0.5	nA
		Full	-5	-	5	nA

Electrical Specifications

Test Conditions: V+ = +15V, V- = -15V, V_{AL} = 0.8V, V_{AH} = 2.4V, Unless Otherwise Specified **(Continued)**

PARAMETER	TEST CONDITIONS	TEMP (°C)	(NOTE 5) MIN	(NOTE 6) TYP	(NOTE 5) MAX	UNITS
Drain OFF Leakage Current, $I_{D(OFF)}$ DG408	V_{EN} = 0V, V_D = ±10V, V_S = ∓10V	25	-1	-	1	nA
		Full	-20	-	20	nA
DG409		25	-1	-	1	nA
		Full	-10	-	10	nA
Drain ON Leakage Current, $I_{D(ON)}$ DG408	V_S = V_D = ±10V (Note 7)	25	-1	-	1	nA
		Full	-20	-	20	nA
DG409		25	-1	-	1	nA
		Full	-10	-	10	nA
POWER SUPPLY CHARACTERISTICS						
Positive Supply Current, I+	V_{EN} = 0V, V_A = 0V (Standby)	Full	-	10	75	µA
Negative Supply Current, I-		Full	-75	1	-	µA
Positive Supply Current, I+	V_{EN} = 2.4V, V_A = 0V (Enabled)	25	-	0.2	0.5	mA
		Full	-	-	2	mA
Negative Supply Current, I-		Full	-500	-	-	µA

Electrical Specifications

Single Supply Test Conditions: V+ = 12V, V- = 0V, V_{AL} = 0.8V, V_{AH} = 2.4V, Unless Otherwise Specified

PARAMETER	TEST CONDITION	TEMP (°C)	(NOTE 5) MIN	(NOTE 6) TYP	(NOTE 5) MAX	UNITS
DYNAMIC CHARACTERISTICS						
Switching Time of Multiplexer, t_{TRANS}	V_{S1} = 8V, V_{S8} = 0V, V_{IN} = 2.4V	25	-	180	-	ns
Enable Turn-ON Time, $t_{ON(EN)}$	V_{INH} = 2.4V, V_{INL} = 0V, V_{S1} = 5V	25	-	180	-	ns
Enable Turn-OFF Time, $t_{OFF(EN)}$		25	-	120	-	ns
Charge Injection, Q	C_L = 10nF, V_{GEN} = 0V, R_{GEN} = 0Ω	25	-	5	-	pC
ANALOG SWITCH CHARACTERISTICS						
Analog Signal Range, V_{ANALOG}		Full	0	-	12	V
Drain-Source ON-Resistance, $r_{DS(ON)}$	V_D = 3V, 10V, I_S = -1mA (Note 7)	25	-	90	-	Ω

NOTES:

5. The algebraic convention whereby the most negative value is a minimum and the most positive a maximum, is used in this data sheet.
6. Typical values are for DESIGN AID ONLY, not guaranteed nor production tested.
7. Sequence each switch ON.
8. $\Delta r_{DS(ON)} = r_{DS(ON)}$ (Max) - $r_{DS(ON)}$ (Min).
9. Worst case isolation occurs on channel 4 due to proximity to the drain pin.

Test Circuits and Waveforms

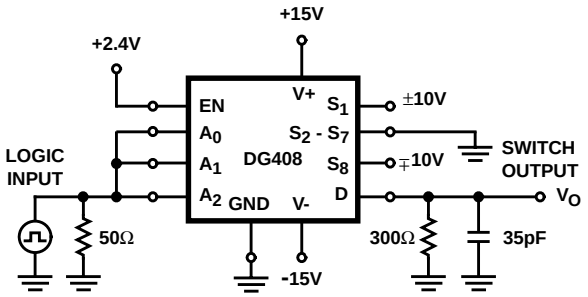

FIGURE 1A. DG408 TEST CIRCUIT

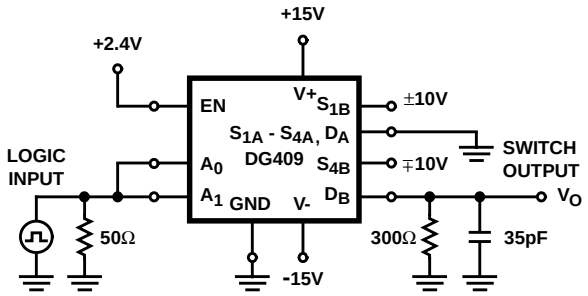

FIGURE 1B. DG409 TEST CIRCUIT

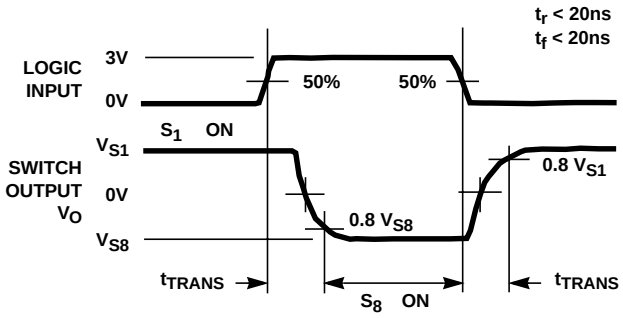

FIGURE 1C. MEASUREMENT POINTS

FIGURE 1. TRANSITION TIME

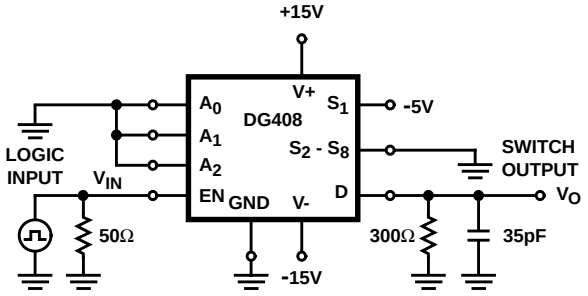

FIGURE 2A. DG408 TEST CIRCUIT

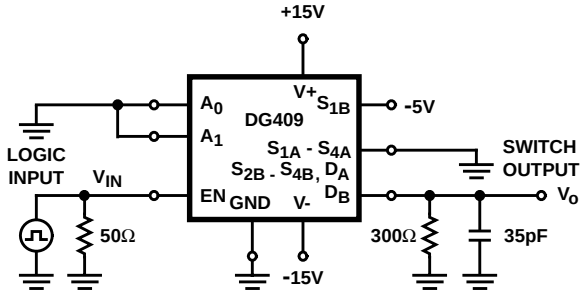

FIGURE 2B. DG409 TEST CIRCUIT

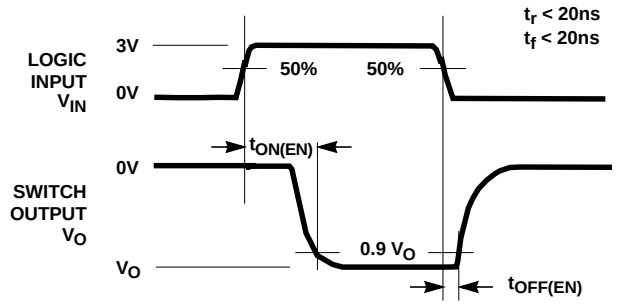

FIGURE 2C. MEASUREMENT POINTS

FIGURE 2. ENABLE SWITCHING TIMES

Test Circuits and Waveforms (Continued)

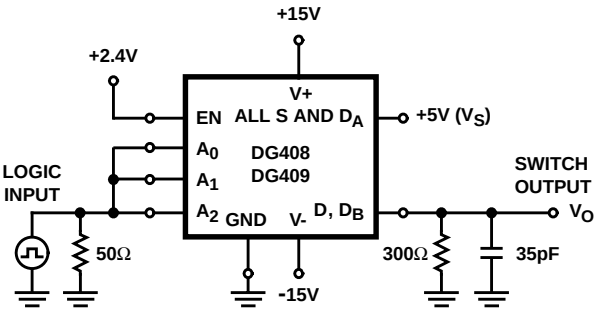

FIGURE 3A. TEST CIRCUIT

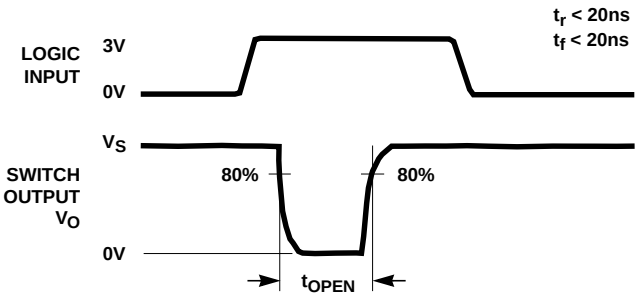

FIGURE 3B. MEASUREMENT POINTS

FIGURE 3. BREAK-BEFORE-MAKE INTERVAL

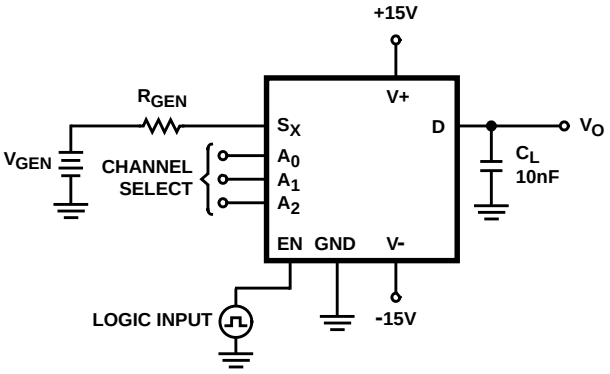

FIGURE 4A. TEST CIRCUIT

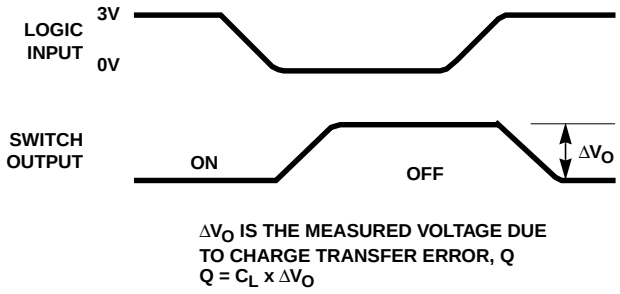

FIGURE 4B. MEASUREMENT POINTS

FIGURE 4. CHARGE INJECTION

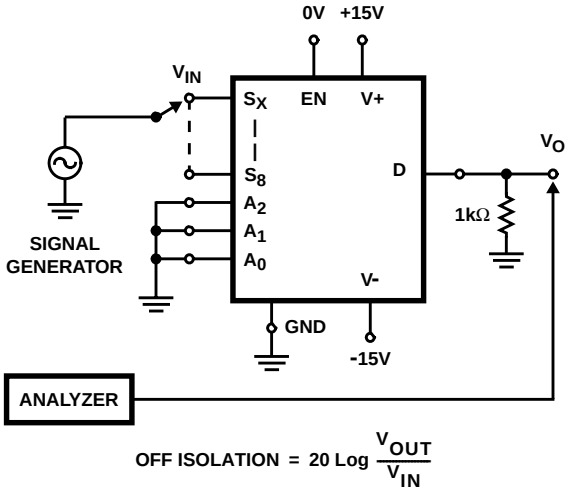

FIGURE 5. OFF ISOLATION

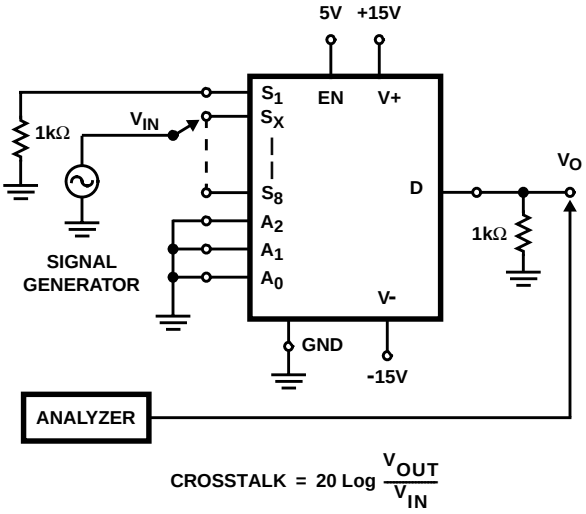

FIGURE 6. CROSSTALK

Test Circuits and Waveforms (Continued)

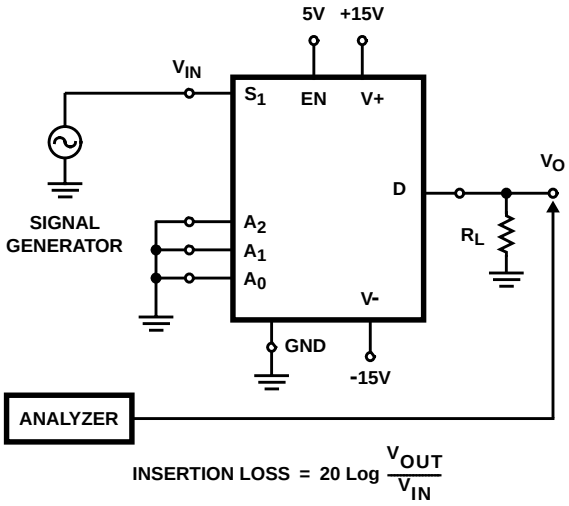

FIGURE 7. INSERTION LOSS

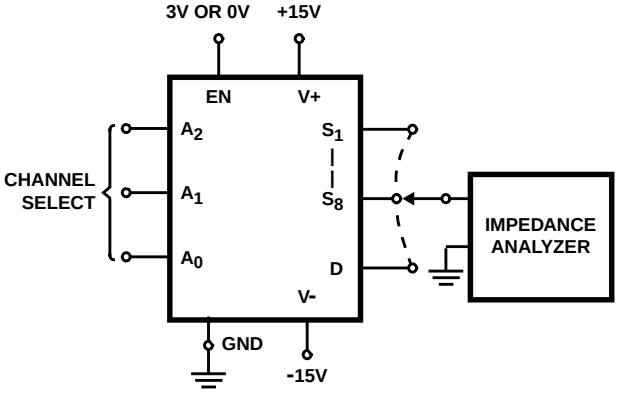

FIGURE 8. SOURCE/DRAIN CAPACITANCES

Typical Applications

Overvoltage Protection

A very convenient form of overvoltage protection consists of adding two small signal diodes (1N4148, 1N914 type) in series with the supply pins (see Figure 9). This arrangement effectively blocks the flow of reverse currents. It also floats the supply pin above or below the normal V+ or V- value. In this case the overvoltage signal actually becomes the power supply of the IC. From the point of view of the chip, nothing has changed, as long as the difference V+ - (V-) doesn't exceed 44V. The addition of these diodes will reduce the analog signal range to 1V below V+ and 1V above V-, but it preserves the low channel resistance and low leakage characteristics.

Typical application information is for Design Aid Only, not guaranteed and not subject to production testing.

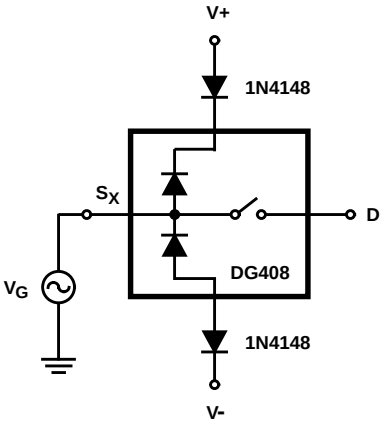

FIGURE 9. OVERVOLTAGE PROTECTION USING BLOCKING DIODES

Typical Performance Curves

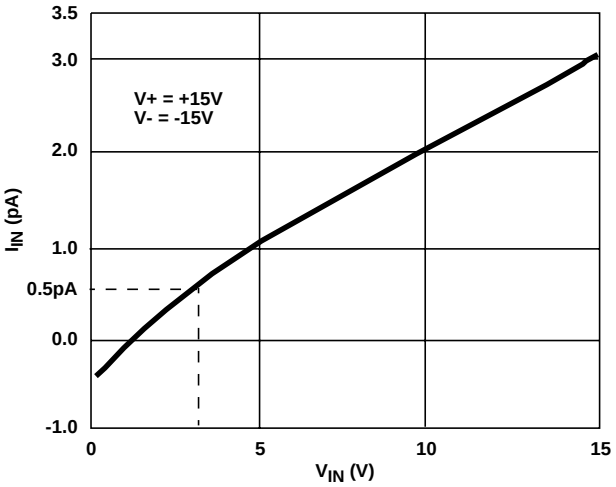

FIGURE 10. INPUT LOGIC CURRENT vs LOGIC INPUT VOLTAGE

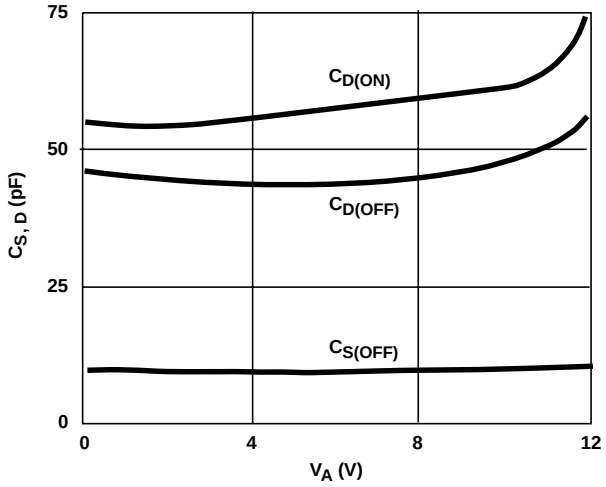

FIGURE 11. SOURCE/DRAIN CAPACITANCE vs ANALOG VOLTAGE (SINGLE 12V SUPPLY)

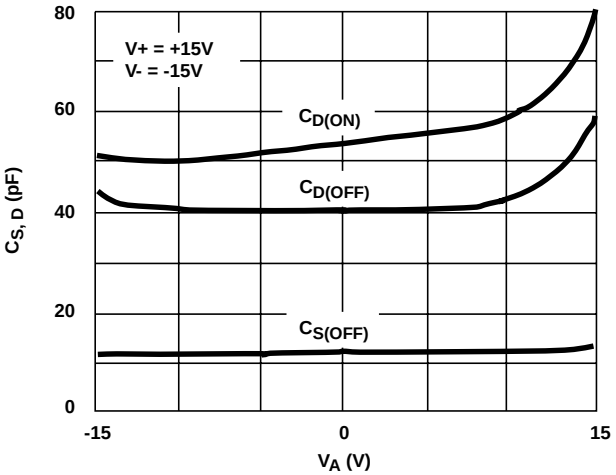

FIGURE 12. SOURCE/DRAIN CAPACITANCE vs ANALOG VOLTAGE

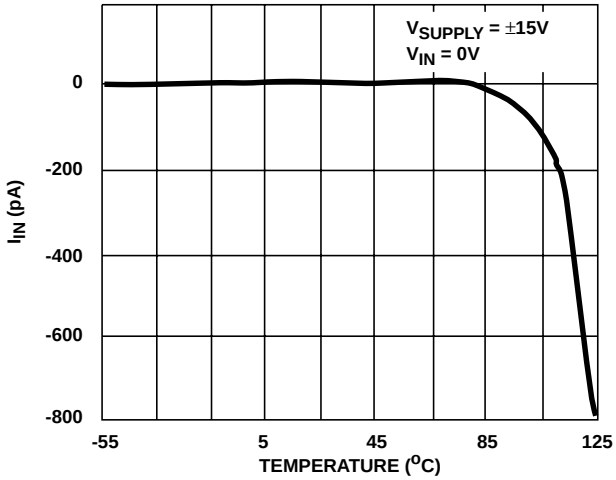

FIGURE 13. LOGIC INPUT CURRENT vs TEMPERATURE

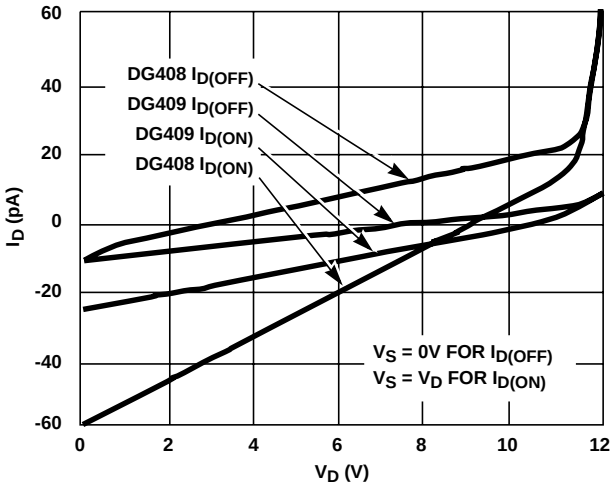

FIGURE 14. DRAIN LEAKAGE CURRENT vs SOURCE/DRAIN VOLTAGE (SINGLE 12V SUPPLY)

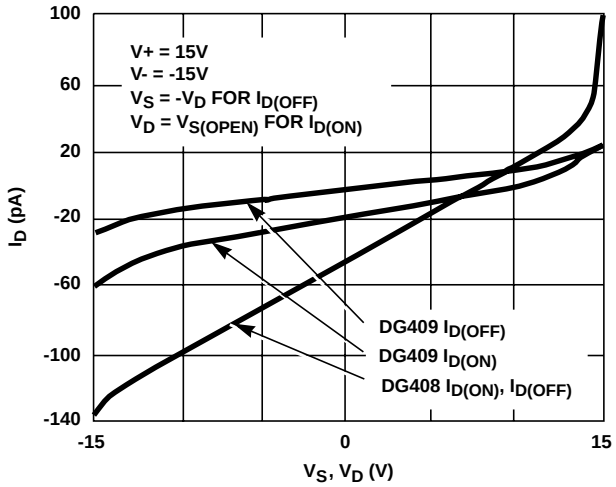

FIGURE 15. DRAIN LEAKAGE CURRENT vs SOURCE/DRAIN VOLTAGE

Typical Performance Curves (Continued)

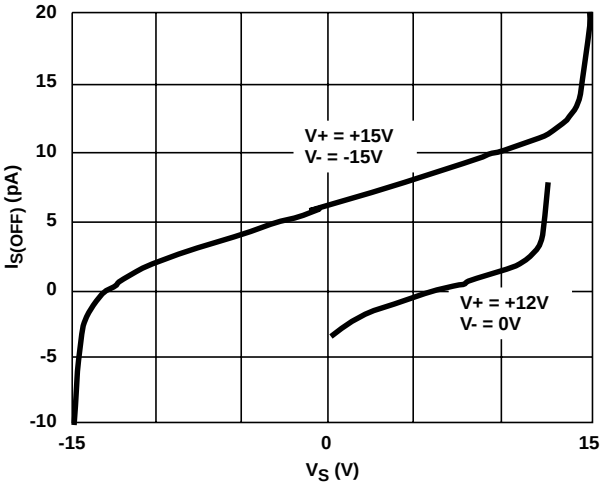

FIGURE 16. SOURCE LEAKAGE CURRENT vs SOURCE VOLTAGE

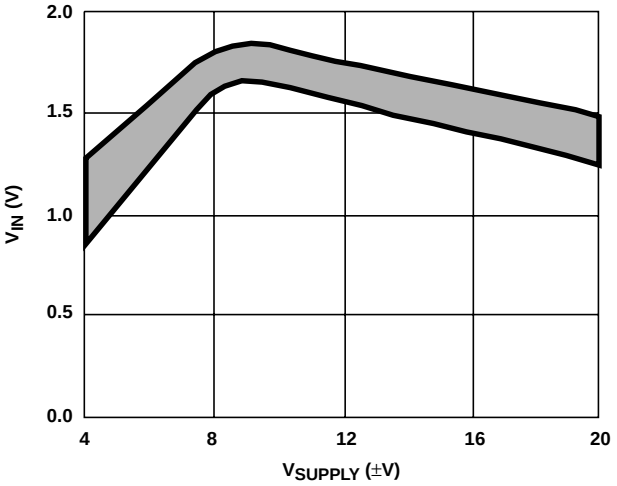

FIGURE 17. INPUT SWITCHING THRESHOLD vs SUPPLY VOLTAGE

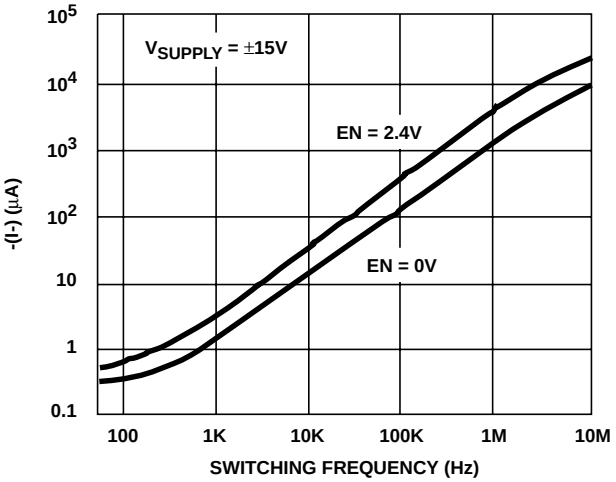

FIGURE 18. NEGATIVE SUPPLY CURRENT vs SWITCHING FREQUENCY

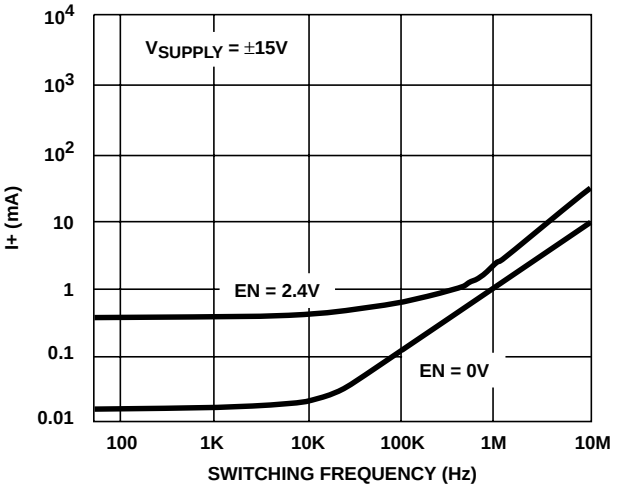

FIGURE 19. POSITIVE SUPPLY CURRENT vs SWITCHING FREQUENCY

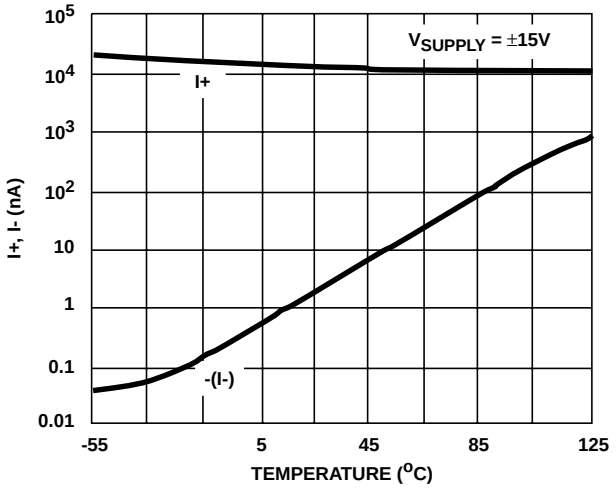

FIGURE 20. I_{SUPPLY} vs TEMPERATURE

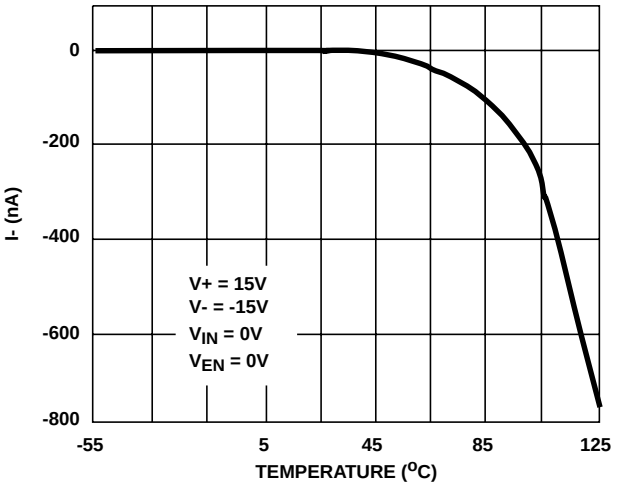

FIGURE 21. NEGATIVE SUPPLY CURRENT vs TEMPERATURE

Typical Performance Curves (Continued)

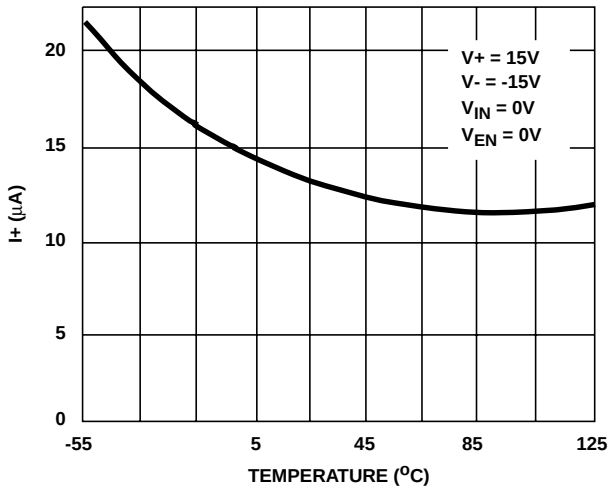

FIGURE 22. POSITIVE SUPPLY CURRENT vs TEMPERATURE (DG408)

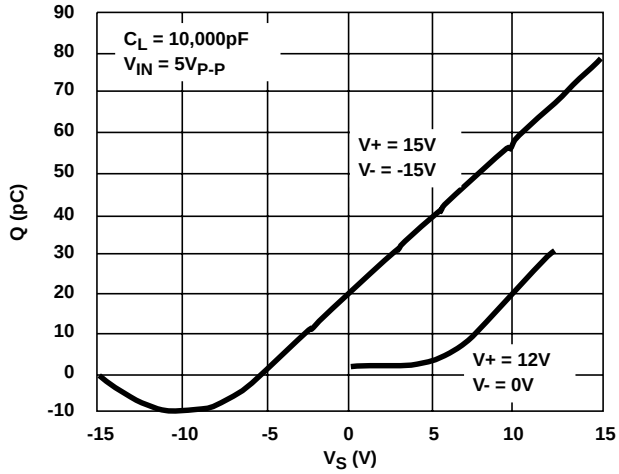

FIGURE 23. CHARGE INJECTION vs ANALOG VOLTAGE

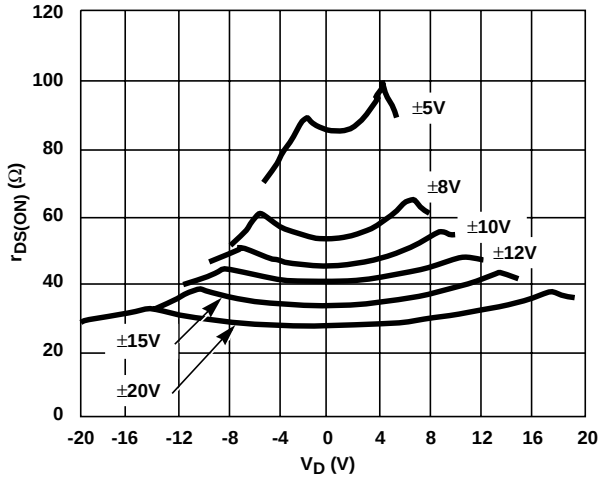

FIGURE 24. $r_{DS(ON)}$ vs V_D AND SUPPLY

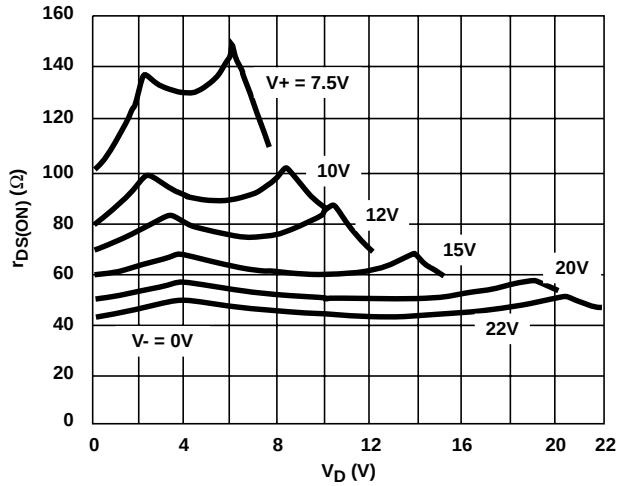

FIGURE 25. $r_{DS(ON)}$ vs V_D (SINGLE SUPPLY)

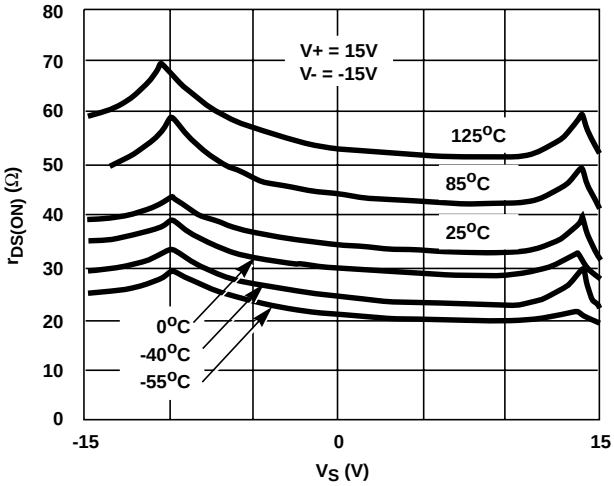

FIGURE 26. $r_{DS(ON)}$ vs V_S AND TEMPERATURE

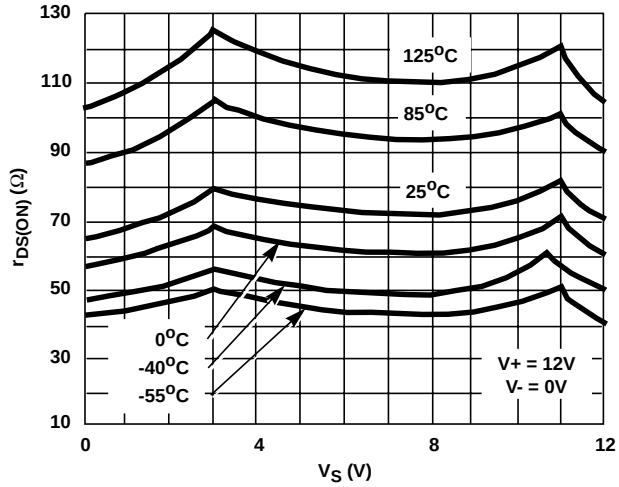

FIGURE 27. $r_{DS(ON)}$ vs V_S AND TEMPERATURE (SINGLE SUPPLY)

Typical Performance Curves (Continued)

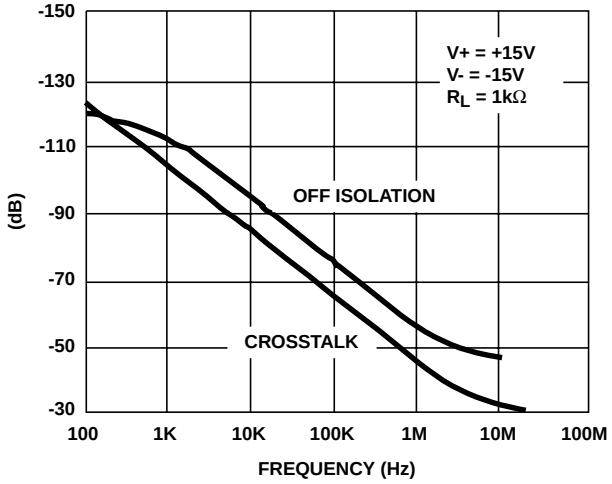

FIGURE 28. OFF ISOLATION AND CROSSTALK vs FREQUENCY

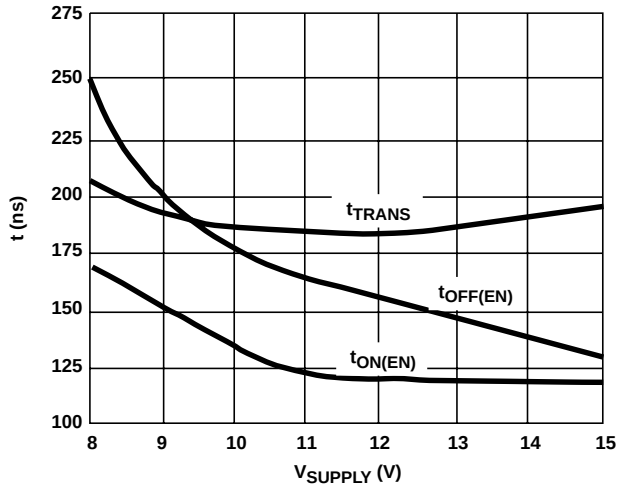

FIGURE 29. SWITCHING TIME vs SINGLE SUPPLY

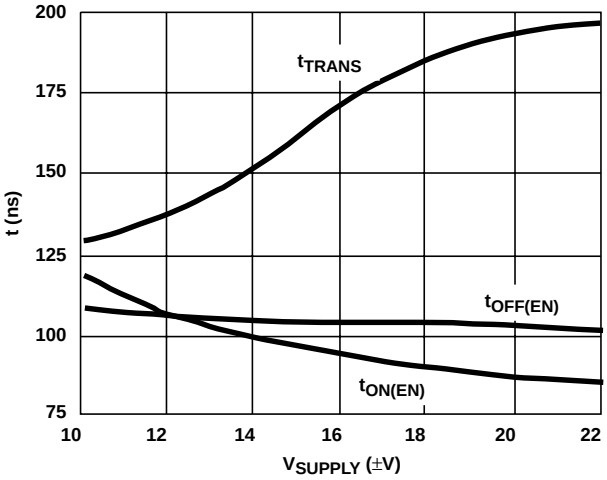

FIGURE 30. SWITCHING TIME vs BIPOLAR SUPPLY

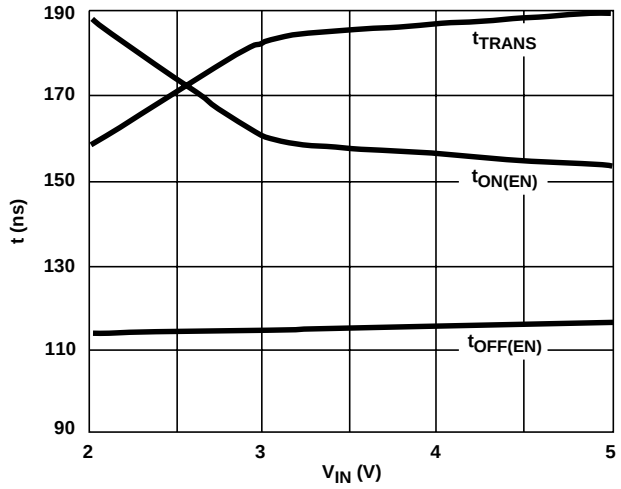

FIGURE 31. SWITCHING TIME vs V_{IN} (SINGLE SUPPLY)

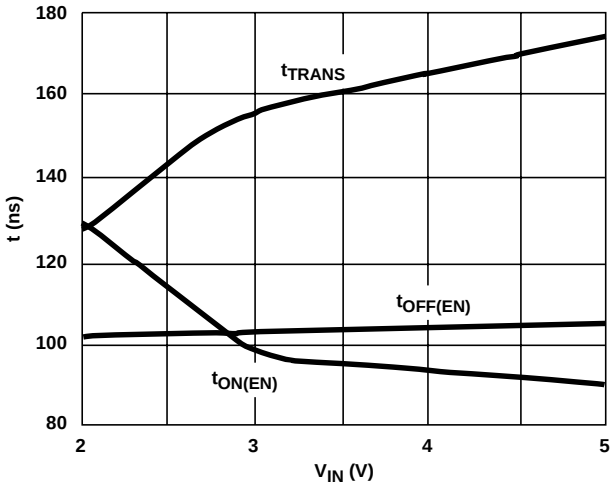

FIGURE 32. SWITCHING TIME vs V_{IN} (BIPOLAR SUPPLY)

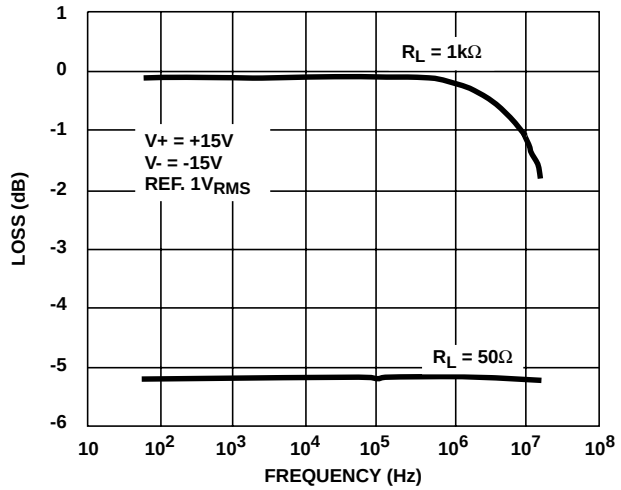

FIGURE 33. INSERTION LOSS vs FREQUENCY

Die Characteristics

DIE DIMENSIONS:

1800µm x 3320µm x 485µm

METALLIZATION:

Type: SiAl
Thickness: 12kÅ ±1kÅ

PASSIVATION:

Type: Nitride
Thickness: 8kÅ ±1kÅ

WORST CASE CURRENT DENSITY:

9.1×10^4 A/cm^2

Metallization Mask Layout

DG408

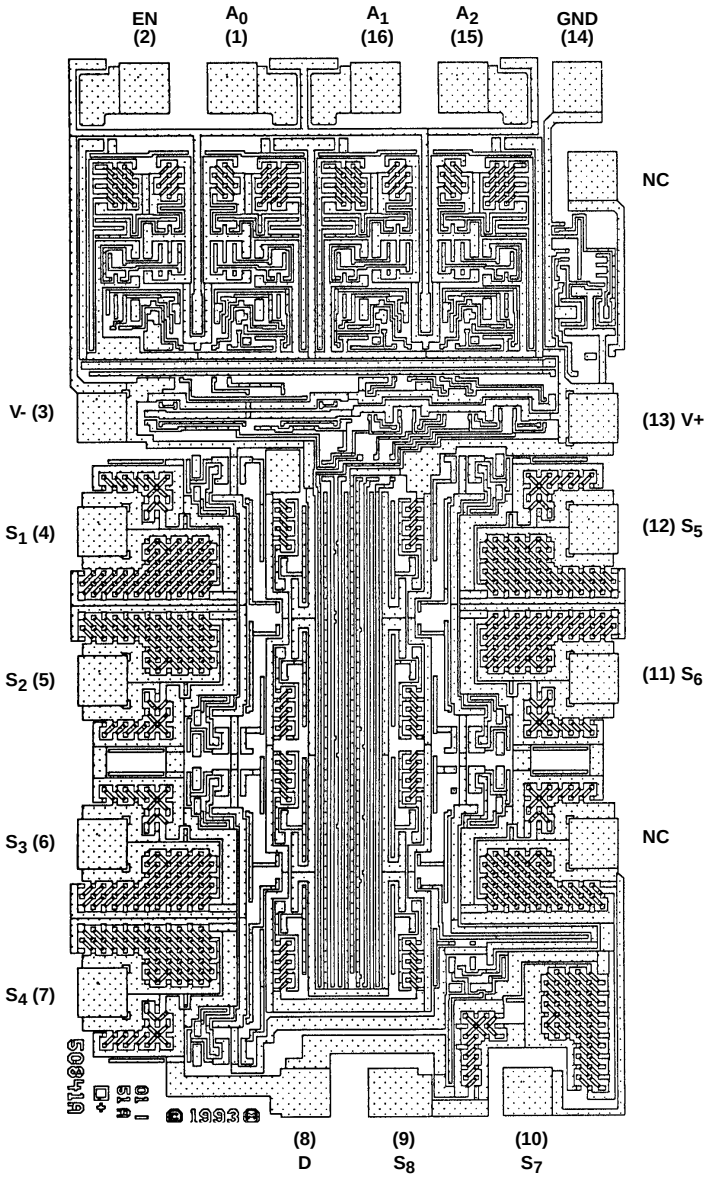

Die Characteristics

DIE DIMENSIONS:

1800µm x 3320µm x 485µm

METALLIZATION:

Type: SiAl
Thickness: 12kÅ ±1kÅ

PASSIVATION:

Type: Nitride
Thickness: 8kÅ ±1kÅ

WORST CASE CURRENT DENSITY:

9.1×10^4 A/cm^2

Metallization Mask Layout

DG409

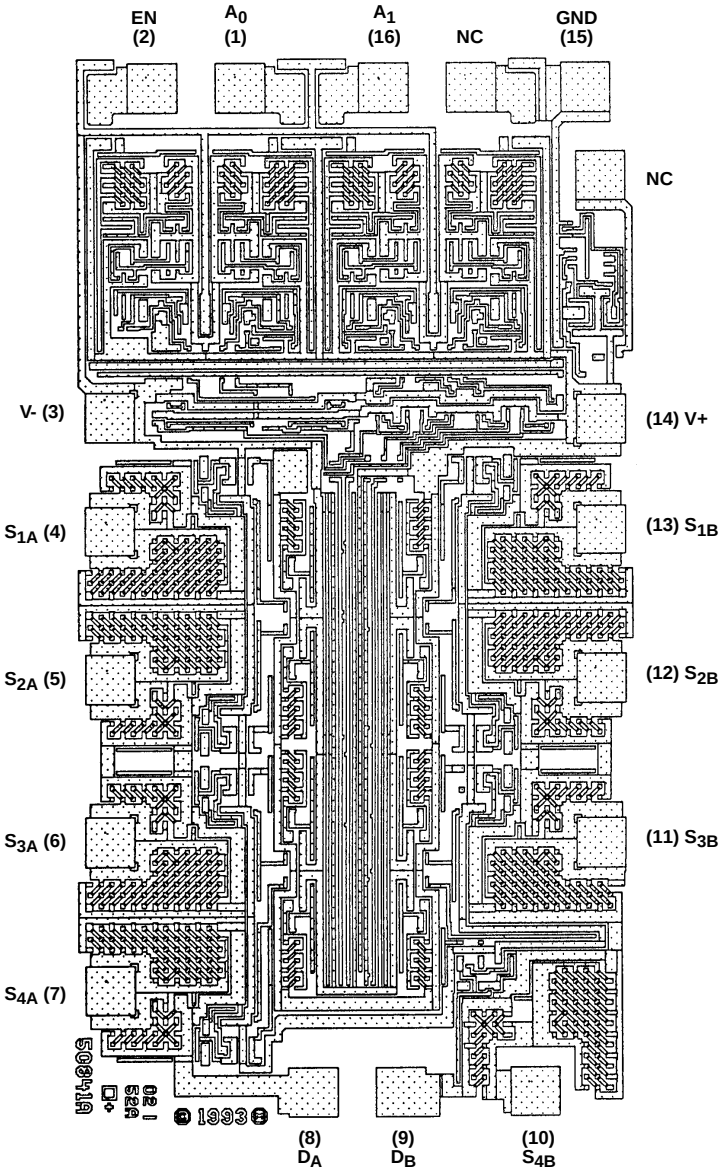

Dual-In-Line Plastic Packages (PDIP)

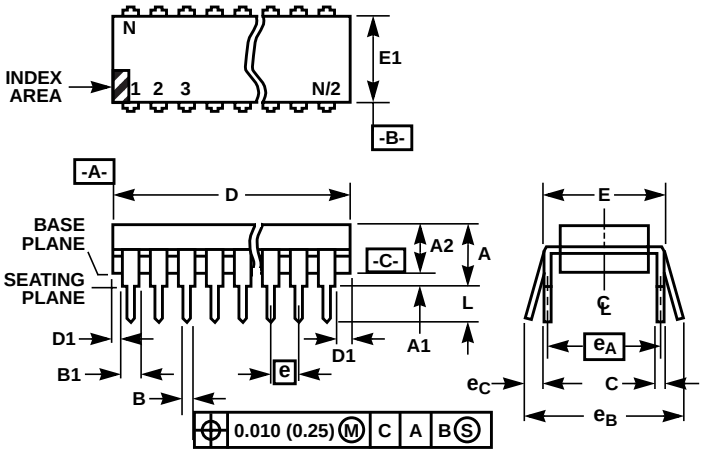

NOTES:

1. Controlling Dimensions: INCH. In case of conflict between English and Metric dimensions, the inch dimensions control.
2. Dimensioning and tolerancing per ANSI Y14.5M-1982.
3. Symbols are defined in the “MO Series Symbol List” in Section 2.2 of Publication No. 95.
4. Dimensions A, A1 and L are measured with the package seated in JEDEC seating plane gauge GS-3.
5. D, D1, and E1 dimensions do not include mold flash or protrusions. Mold flash or protrusions shall not exceed 0.010 inch (0.25mm).
6. E and e_A are measured with the leads constrained to be perpendicular to datum -C-.
7. e_B and e_C are measured at the lead tips with the leads unconstrained. e_C must be zero or greater.
8. B1 maximum dimensions do not include dambar protrusions. Dambar protrusions shall not exceed 0.010 inch (0.25mm).
9. N is the maximum number of terminal positions.
10. Corner leads (1, N, N/2 and N/2 + 1) for E8.3, E16.3, E18.3, E28.3, E42.6 will have a B1 dimension of 0.030 - 0.045 inch (0.76 - 1.14mm).

E16.3 **(JEDEC MS-001-BB ISSUE D)**
16 LEAD DUAL-IN-LINE PLASTIC PACKAGE

	INCHES		MILLIMETERS		
SYMBOL	MIN	MAX	MIN	MAX	NOTES
A	-	0.210	-	5.33	4
A1	0.015	-	0.39	-	4
A2	0.115	0.195	2.93	4.95	-
B	0.014	0.022	0.356	0.558	-
B1	0.045	0.070	1.15	1.77	8, 10
C	0.008	0.014	0.204	0.355	-
D	0.735	0.775	18.66	19.68	5
D1	0.005	-	0.13	-	5
E	0.300	0.325	7.62	8.25	6
E1	0.240	0.280	6.10	7.11	5
e	0.100 BSC		2.54 BSC		-
e_A	0.300 BSC		7.62 BSC		6
e_B	-	0.430	-	10.92	7
L	0.115	0.150	2.93	3.81	4
N	16		16		9

Rev. 0 12/93

Small Outline Plastic Packages (SOIC)

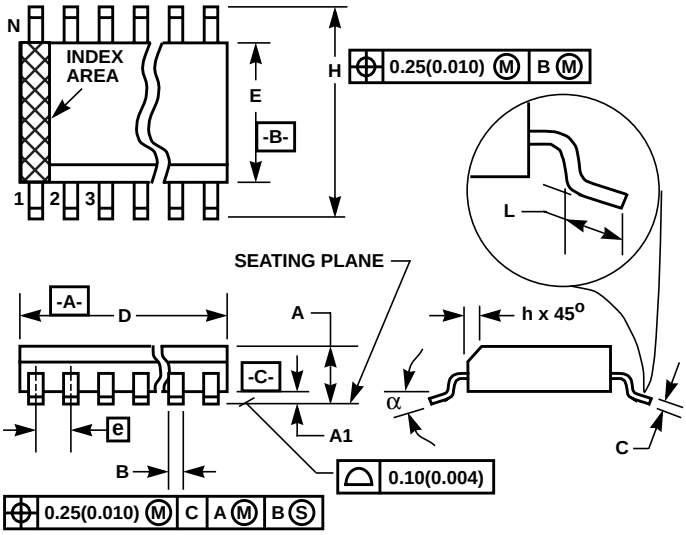

M16.15 **(JEDEC MS-012-AC ISSUE C)**
16 LEAD NARROW BODY SMALL OUTLINE PLASTIC PACKAGE

SYMBOL	INCHES		MILLIMETERS		NOTES
	MIN	MAX	MIN	MAX	
A	0.0532	0.0688	1.35	1.75	-
A1	0.0040	0.0098	0.10	0.25	-
B	0.013	0.020	0.33	0.51	9
C	0.0075	0.0098	0.19	0.25	-
D	0.3859	0.3937	9.80	10.00	3
E	0.1497	0.1574	3.80	4.00	4
e	0.050 BSC		1.27 BSC		-
H	0.2284	0.2440	5.80	6.20	-
h	0.0099	0.0196	0.25	0.50	5
L	0.016	0.050	0.40	1.27	6
N	16		16		7
α	0°	8°	0°	8°	-

Rev. 0 12/93

NOTES:

1. Symbols are defined in the “MO Series Symbol List” in Section 2.2 of Publication Number 95.
2. Dimensioning and tolerancing per ANSI Y14.5M-1982.
3. Dimension “D” does not include mold flash, protrusions or gate burrs. Mold flash, protrusion and gate burrs shall not exceed 0.15mm (0.006 inch) per side.
4. Dimension “E” does not include interlead flash or protrusions. Interlead flash and protrusions shall not exceed 0.25mm (0.010 inch) per side.
5. The chamfer on the body is optional. If it is not present, a visual index feature must be located within the crosshatched area.
6. “L” is the length of terminal for soldering to a substrate.
7. “N” is the number of terminal positions.
8. Terminal numbers are shown for reference only.
9. The lead width “B”, as measured 0.36mm (0.014 inch) or greater above the seating plane, shall not exceed a maximum value of 0.61mm (0.024 inch).
10. Controlling dimension: MILLIMETER. Converted inch dimensions are not necessarily exact.

All Intersil semiconductor products are manufactured, assembled and tested under **ISO9000** quality systems certification.

Intersil semiconductor products are sold by description only. Intersil Corporation reserves the right to make changes in circuit design and/or specifications at any time without notice. Accordingly, the reader is cautioned to verify that data sheets are current before placing orders. Information furnished by Intersil is believed to be accurate and reliable. However, no responsibility is assumed by Intersil or its subsidiaries for its use; nor for any infringements of patents or other rights of third parties which may result from its use. No license is granted by implication or otherwise under any patent or patent rights of Intersil or its subsidiaries.

For information regarding Intersil Corporation and its products, see web site **http://www.intersil.com**

Sales Office Headquarters

NORTH AMERICA
Intersil Corporation
P. O. Box 883, Mail Stop 53-204
Melbourne, FL 32902
TEL: (407) 724-7000
FAX: (407) 724-7240

EUROPE
Intersil SA
Mercure Center
100, Rue de la Fusee
1130 Brussels, Belgium
TEL: (32) 2.724.2111
FAX: (32) 2.724.22.05

ASIA
Intersil (Taiwan) Ltd.
7F-6, No. 101 Fu Hsing North Road
Taipei, Taiwan
Republic of China
TEL: (886) 2 2716 9310
FAX: (886) 2 2715 3029