查询DMC16207供应商 捷多邦，专业PCB打样工厂，24小时加急出货

LCD Module Specification	First Edition	Approved by	Production Div.
	Jul 23, 1999	Checked by	Quality Assurance Div.
	Final Revision	Checked by	Design Engineering Div.
	*******	Prepared by	Production Div.
Type No.	DMC16207N−B*		

Table of Contents

1. General Specifications 2
2. Electrical Specifications 3
3. Optical Specifications 5
4. I/O Terminal 7
5. Test 9
6. Appearance Standards 10
7. Code System of Production Lot 13
8. Type Number 13
9. Applying Precautions 13
10. Precautions Relating Product Handling 14
11. Warranty 15

Revision History

Rev.	Date	Page	Comment

找PDF 维库一下 pdf.dzsc.com

1. General Specifications

Operating Temp.	:	min. 0℃ ～ max. 50℃
Storage Temp.	:	min. -20℃ ～ max. 70℃
Display Format	:	16 characters × 2 lines
Display Fonts	:	5 × 8 dots (1 character)
Viewing Area	:	61.0 (W) × 16.0 (H) mm
Outline Dimensions	:	84.0 (W) × 44.0 (H) × 11.0 max. (D) mm
Weight	:	50g max.
LCD Type	:	NRD-7047 (STN / Neutral-mode / Reflective)
Viewing Angle	:	6:00
Backlight	:	None
Drawings	:	Dimensional Outline UE-34971

2. Electrical Specifications

2.1. Absolute Maximum Ratings

V_{SS}=0V

Parameter	Symbol	Conditions	Min.	Max.	Units
Supply Voltage (Logic)	V_{CC}-V_{SS}	—	-0.3	7.0	V
Supply Voltage (LCD Drive)	V_{CC}-V_{EE}	—	0	13.0	V
Input Voltage	V_I	—	-0.3	V_{CC}+0.3	V

2.2. DC Characteristics

Ta=25℃, V_{SS}=0V

Parameter	Symbol	Conditions	Min.	Typ.	Max.	Units
Supply Voltage (Logic)	V_{CC}-V_{SS}	—	4.5	—	5.5	V
Supply Voltage (LCD Drive)	V_{CC}-V_{EE}	Shown in 3.1				V
High Level Input Voltage	V_{IH}	V_{CC}=5.0V±10%	2.2	—	V_{CC}	V
Low Level Input Voltage	V_{IL}	V_{CC}=5.0V±10%	-0.3	—	0.6	V
High Level Output Voltage	V_{OH}	I_{OH}=-0.205mA	2.4	—	—	V
Low Level Output Voltage	V_{OL}	I_{OL}=1.2mA	—	—	0.4	V
Supply Current	I_{CC}	V_{CC}-V_{SS}=5.0V	—	1.8	3.0	mA

2.3.AC Characteristics

V_{CC}=5.0V±10%

Parameter	Symbol	Conditions	Min.	Max.	Units
Enable Cycle Time	t_{CYC}	Fig.1, 2	500	–	ns
Enable Pulse Width	PW_{EH}	Fig.1, 2	230	–	ns
Enable Rise/Fall Time	t_{Er}, t_{Ef}	Fig.1, 2	–	20	ns
Address Setup Time	t_{AS}	Fig.1, 2	40	–	ns
Address Hold Time	t_{AH}	Fig.1, 2	10	–	ns
Write Data Setup Time	t_{DSW}	Fig.1	80	–	ns
Write Data Hold Time	t_{DHW}	Fig.1	10	–	ns
Read Data Delay Time	t_{DDR}	Fig.2	–	160	ns
Read Data Hold Time	t_{DHR}	Fig.2	5	–	ns

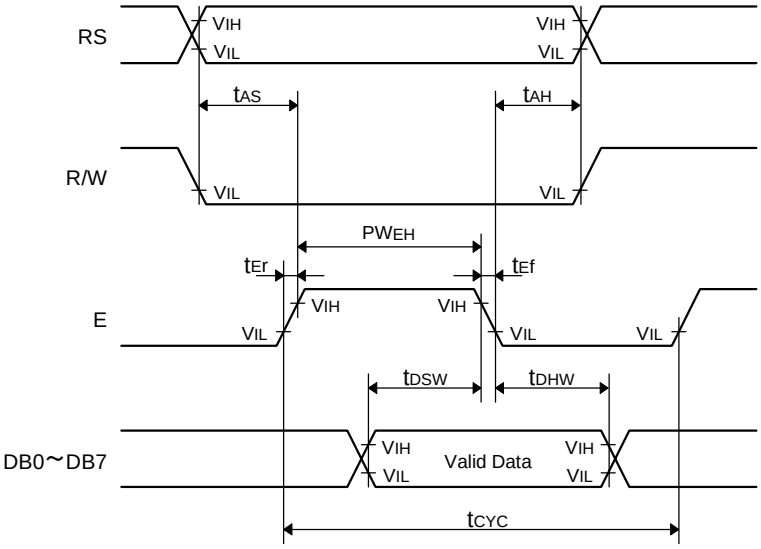

Fig.1 Write Operation Timing

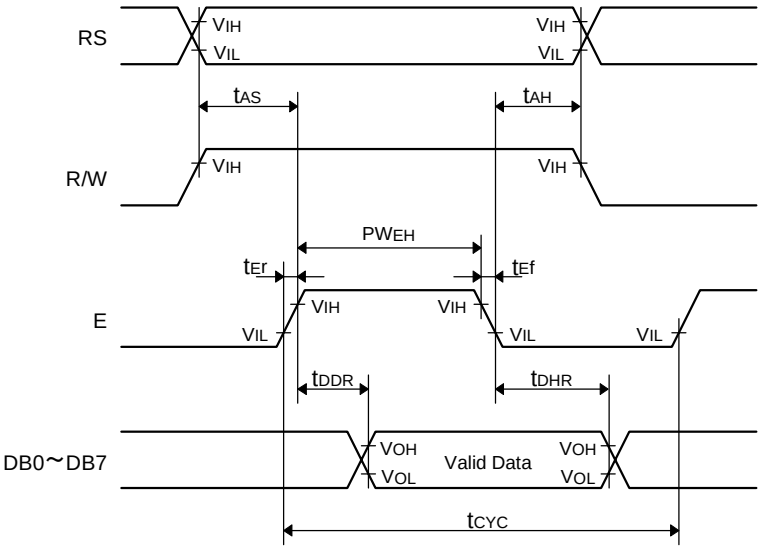

Fig.2 Read Operation Timing

3. Optical Specifications

3.1.LCD Driving Voltage

Parameter	Symbol	Conditions	Min.	Typ.	Max.	Units
Recommended		Ta= 0℃	—	—	5.3	V
LCD Driving Voltage	V_{CC}-V_{EE}	Ta=25℃	4.4	4.7	5.0	V
Note 1		Ta=50℃	4.2	—	—	V

Note 1 : Voltage (Applied actual waveform to LCD Module) for the best contrast. The range of minimum and maximum shows tolerance of the operating voltage. The specified contrast ratio and response time are not guaranteed over the entire range.

3.2.Optical Characteristics

Ta=25℃, 1/16 Duty, 1/4.5 Bias, V_D=4.7V (Note 4), $\theta = 0^\circ$, $\phi = -^\circ$

Parameter		Symbol	Conditions	Min.	Typ.	Max.	Units
Contrast Ratio Note 1		CR	$\theta = 0^\circ$, $\phi = -^\circ$	—	5	—	
Viewing Angle			Shown in 3.3				
Response	Rise Note 2	T_{ON}	—	—	130	200	ms
Time	Decay Note 3	T_{OFF}	—	—	180	280	ms

Note 1 : Contrast ratio is definded as follows.

$CR = L_{OFF} / L_{ON}$

L_{ON} : Luminance of the ON segments

L_{OFF} : Luminance of the OFF segments

Note 2 : The time that the luminance level reaches 90% of the saturation level from 0% when ON signal is applied.

Note 3 : The time that the luminance level reaches 10% of the saturation level from 100% when OFF signal is applied.

Note 4 : Definition of Driving Voltage V_D

Assuming that the typical driving waveforms shown below are applied to the LCD Panel at 1/A Duty - 1/B Bias (A : Duty Number, B : Bias Number). Driving voltage V_D is definded as follows.

$V_D = (Vth1+Vth2) / 2$

Vth1 : The voltage V_{O-P} that should provide 50% of the saturation level in the luminance at the segment which the ON signal is applied to.

Vth2 : The voltage V_{O-P} that should provide 50% of the saturation level in the luminance at the segment which the OFF signal is applied to.

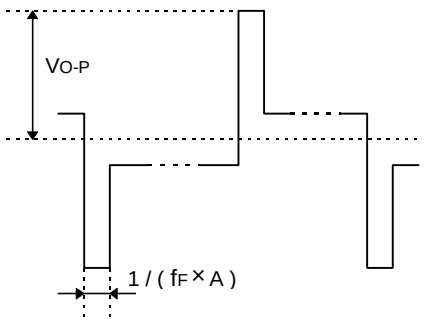

〈ON SIGNAL〉

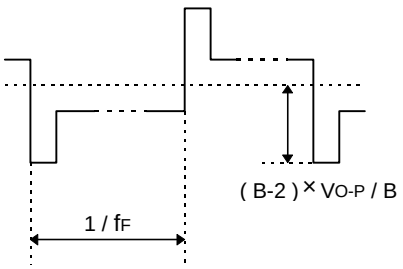

〈OFF SIGNAL〉

3.3.Definition of Viewing Angle and Optimum Viewing Area

・Point ● shows the point where contrast ratio is measured. : $\theta = 0^\circ$, $\phi = -^\circ$
・Driving condition : 1/16 Duty, 1/4.5 Bias, V_D=4.7V, f_F=84.4Hz

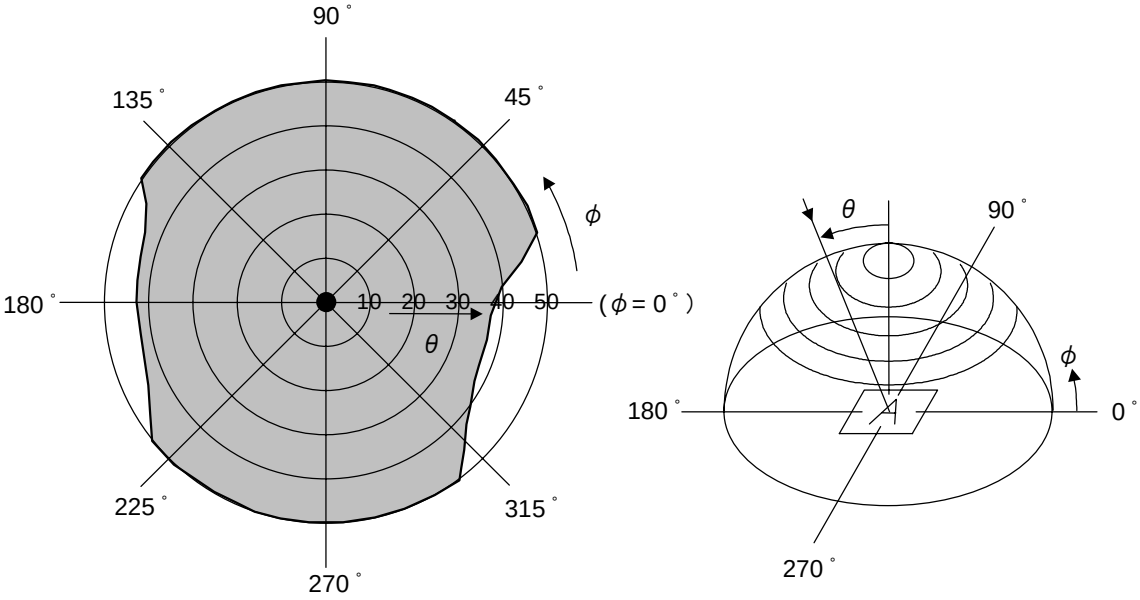

・Area ▭ shows typ. CR≧2

3.4.System Block Diagram

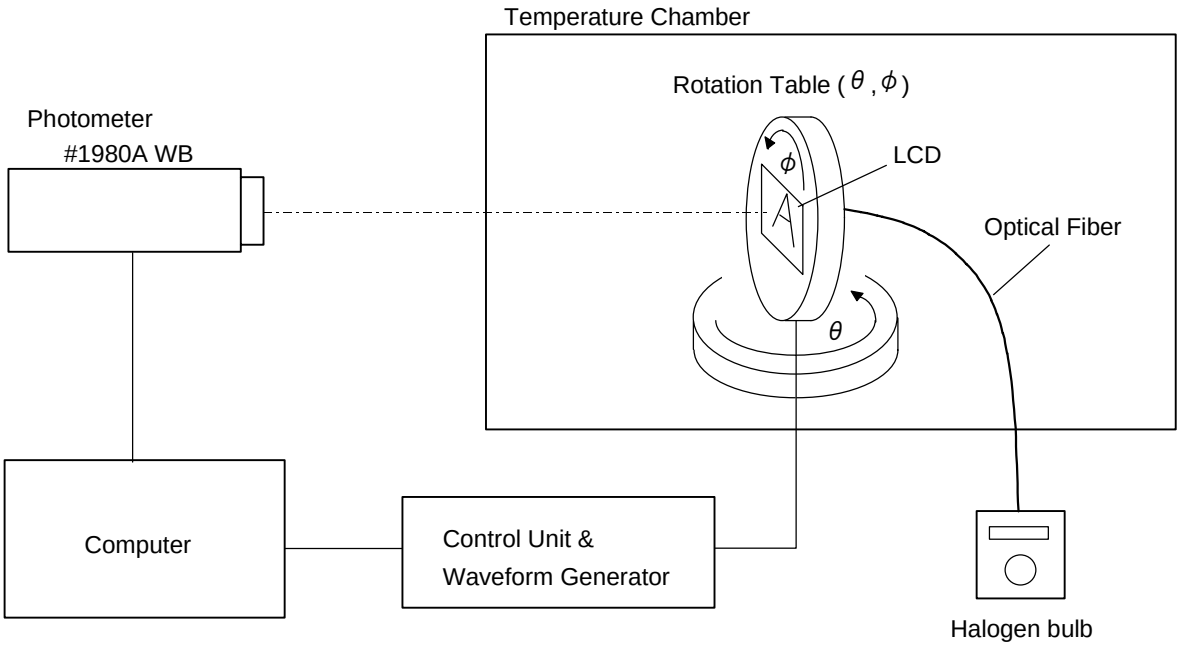

4.I/O Terminal

4.1.Pin Assignment

No.	Symbol	Level	Function
1	V_{SS}	—	Power Supply (0V, GND)
2	V_{CC}	—	Power Supply for Logic
3	V_{EE}	—	Power Supply for LCD Drive
4	RS	H / L	Register Select Signal
5	R/W	H / L	Read/Write Select Signal H : Read L : Write
6	E	H / L	Enable Signal (No pull-up Resister)
7	DB0	H / L	Data Bus Line / Non-connection at 4-bit operation
8	DB1	H / L	Data Bus Line / Non-connection at 4-bit operation
9	DB2	H / L	Data Bus Line / Non-connection at 4-bit operation
10	DB3	H / L	Data Bus Line / Non-connection at 4-bit operation
11	DB4	H / L	Data Bus Line
12	DB5	H / L	Data Bus Line
13	DB6	H / L	Data Bus Line
14	DB7	H / L	Data Bus Line

4.2.Example of Power Supply

It is recommended to apply a potentiometer for the contrast adjust due to the tolerance of the driving voltage and its temperature dependence.

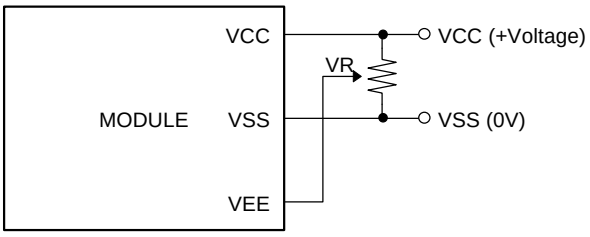

VR=10～20KΩ

4.3.Block Diagram

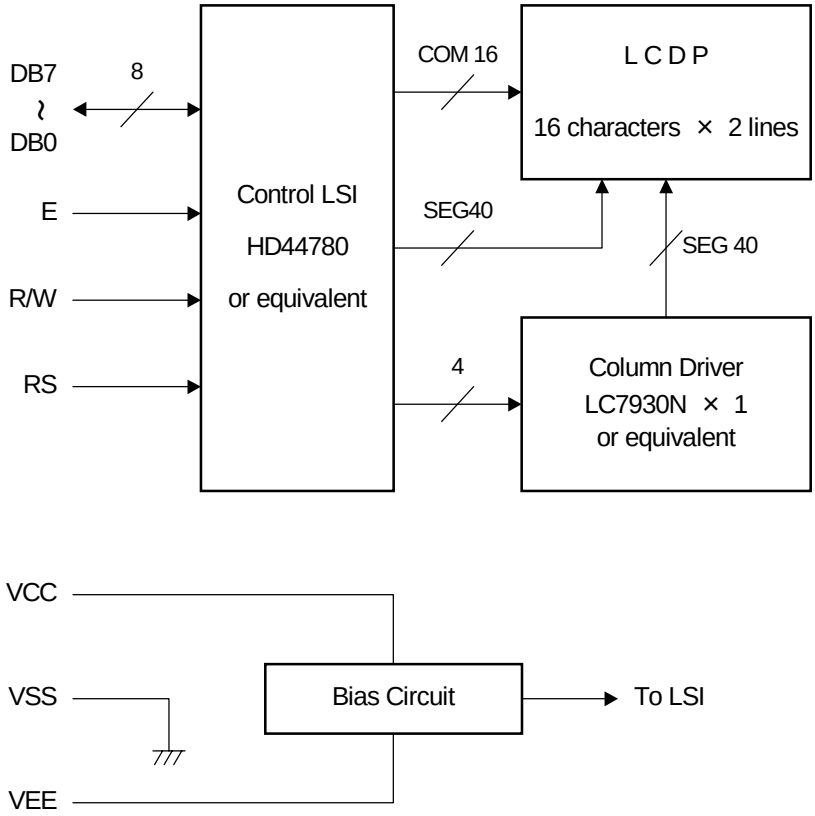

5. Test

No change on display and in operation under the following test condition.

No.	Parameter	Conditions	Notes
1	High Temperature Operating	50℃±2℃, 96hrs (operation state)	
2	Low Temperature Operating	0℃±2℃, 96hrs (operation state)	3
3	High Temperature Storage	70℃±2℃, 96hrs	4
4	Low Temperature Storage	-20℃±2℃, 96hrs	3, 4
5	Damp Proof Test	40℃±2℃, 90～95%RH, 96hrs	3, 4
6	Vibration Test	Total fixed amplitude : 1.5mm Vibration Frequency : 10～55Hz One cycle 60 seconds to 3 directions of X, Y, Z for each 15 minutes	5
7	Shock Test	To be measured after dropping from 60cm high on the concrete surface in packing state. 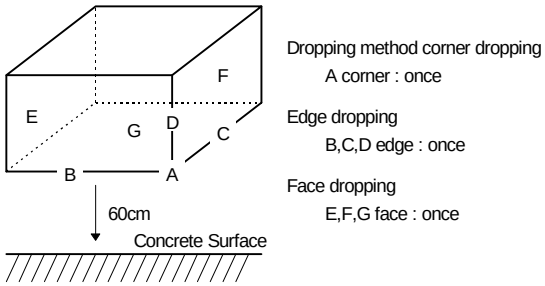 	

Note 1 : Unless otherwise specified, tests will be conducted under the following condition.
Temperature : 20±5℃
Humidity : 65±5%

Note 2 : Unless otherwise specified, tests will be not conducted under functioning state.

Note 3 : No dew condensation to be observed.

Note 4 : The function test shall be conducted after 4 hours storage at the normal temperature and humidity after removed from the test chamber.

Note 5 : Vibration test will be conducted to the product itself without putting it in a container.

6. Appearance Standards

6.1. Inspection conditions

The LCD shall be inspected under 40W white fluorescent light.
The distance between the eyes and the sample shall be more than 30cm.
All directions for inspecting the sample should be within 45° against perpendicular line.

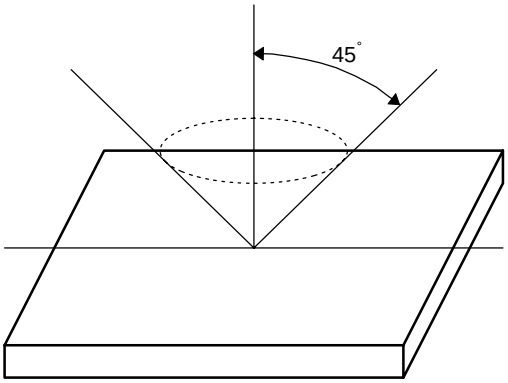

6.2. Definition of applicable Zones

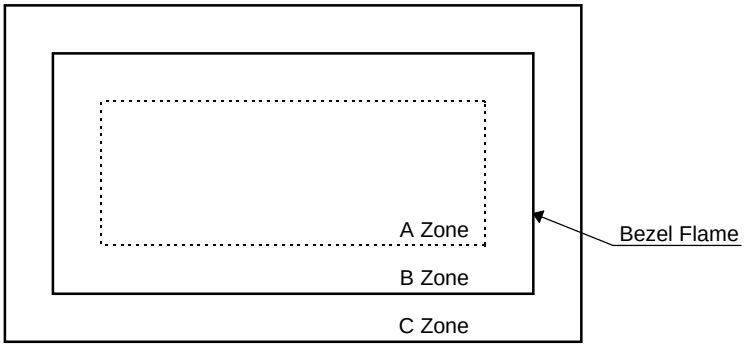

A Zone : Active display area
B Zone : Area from outside of "A Zone" to validity viewing area
C Zone : Rest parts

A Zone + B Zone = Validity viewing area

6.3.Standards

<table>
<tr><th>No.</th><th>Parameter</th><th>Criteria</th></tr>
<tr><td>1</td><td>Black and White Spots, Foreign Substances</td><td>

(1) Round Shape

Zone / Dimension (mm)	Acceptable Number		
	A	B	C
D ≦ 0.1	*	*	*
0.1 ＜ D ≦ 0.2	5	5	*
0.2 ＜ D ≦ 0.3	0	1	*
0.3 ＜ D	0	0	*

D = (Long + Short) / 2 * : Disregard

(2) Line Shape

Zone / X(mm) / Y(mm)		Acceptable Number		
		A	B	C
—	0.02≧W	*	*	*
2.0≧L	0.03≧W	3	3	*
1.0≧L	0.04≧W	1	2	*
1.0≧L	0.05≧W	0	2	*
—	0.05＜W	In the same way (1)		

X : Length Y : Width * : Disregard

Total defects shall not exceed 5.

</td></tr>
<tr><td>2</td><td>Air Bubbles (between glass & polarizer)</td><td>

Zone / Dimension (mm)	Acceptable Number		
	A	B	C
D ≦0.15	*	*	*
0.15＜ D ≦0.3	2	3	*
0.3 ＜ D ≦0.5	1	2	*
0.5 ＜ D ≦1.0	0	1	*

* : Disregard

Total defects shall not exceed 3.

</td></tr>
</table>

No.	Parameter	Criteria
3	The Shape of Dot	(1) Dot Shape (with Dent) 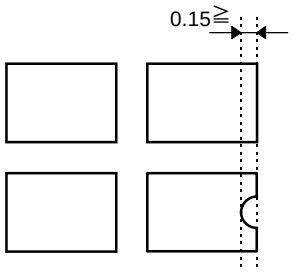 As per the sketch of left hand. (2) Dot Shape (with Projection) 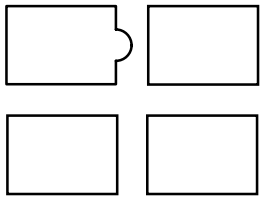 Should not be connected to next dot. (3) Pin Hole 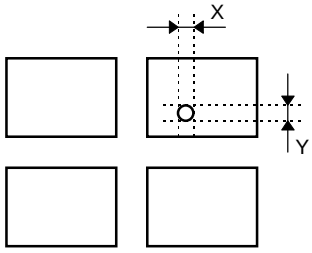 (X+Y) / 2≦0.2mm (Less than 0.1mm is no counted.) Total defects shall not exceed 5.
4	Polarizer Scratches	Not to be conspicuous defects.
5	Polarizer Dirts	If the stains are removed easily from LCDP surface, the module is not defective.
6	Color Variation	Not to be conspicuous defects.

7. Code System of Production Lot

The production lot of module is specified as follows.

□ □ □ □ □ □

- Factory Number (Numeral)
- Factory Code (Alphabet)
- Production Week (1～5)
- Production Month (1～9, X, Y, Z)
- Production Year (Lower 2 digits)

8. Type Number

The type number of module is specified on the back of module as follows.

DMC１６２０７　N－B

- Stamp
- Etching or Printing

9. Applying Precautions

Please contact us when questions and/or new problems not specified in this specifications arise.

10. Precautions Relating Product Handling

The Following precautions will guide you in handling our product correctly.

1) Liquid crystal display devices

① The liquid crystal display device panel used in the liquid crystal display module is made of plate glass. Avoid any strong mechanical shock. Should the glass break handle it with care.
② The polarizer adhering to the surface of the LCD is made of a soft material.
Guard against scratching it.

2) Care of the liquid crystal display module against static electricity discharge.

① When working with the module, be sure to ground your body and any electrical equipment you may be using. We strongly recommend the use of anti static mats (made of rubber), to protect work tables against the hazards of electrical shock.
② Avoid the use of work clothing made of synthetic fibers. We recommend cotton clothing or other conductivity-treated fibers.
③ Slowly and carefully remove the protective film from the LCD module, since this operation can generate static electricity.

3) When the LCD module alone must be stored for long periods of time:

① Protect the modules from high temperature and humidity.
② Keep the modules out of direct sunlight or direct exposure to ultraviolet rays.
③ Protect the modules from excessive external forces.

4) Use the module with a power supply that is equipped with an overcurrent protector circuit, since the module is not provided with this protective feature.

5) Do not ingest the LCD fluid itself should it leak out of a damaged LCD module. Should hands or clothing come in contact with LCD fluid, wash immediately with soap.

6) Conduc1tivity is not guaranteed for models that use metal holders where solder connections between the metal holder and the PCB are not used. Please contact us to discuss appropriate ways to assure conductivity.

7) For models which use CFL:

① High voltage of 1000V or greater is applied to the CFL cable connector area.
Care should be taken not to touch connection areas to avoid burns.
② Protect CFL cables from rubbing against the unit and thus causing the wire jacket to become worn.
③The use of CFLs for extended periods of time at low temperatures will significantly shorten their service life.

8) For models which use touch panels:

①Do not stack up modules since they can be damaged by components on neighboring modules.
②Do not place heavy objects on top of the product. This could cause glass breakage.

9) For models which use COG,TAB,or COF:

①The mechanical strength of the product is low since the IC chip faces out unprotected from the rear. Be sure to protect the rear of the IC chip from external forces.
②Given the fact that the rear of the IC chip is left exposed, in order to protect the unit from electrical damage, avoid installation configurations in which the rear of the IC chip runs the risk of making any electrical contact.

10) Models which use flexible cable, heat seal, or TAB:

①In order to maintain reliability, do not touch or hold by the connector area.
②Avoid any bending, pulling, or other excessive force, which can result in broken connections.

11.Warranty

This product has been manufactured to your company's specifications as a part for use in your company's general electronic products. It is guaranteed to perform according to delivery specifications. For any other use apart from general electronic equipment, we cannot take responsibility if the product is used in medical devices, nuclear power control equipment, aerospace equipment, fire and security systems, or any other applications in which there is a direct risk to human life and where extremely high levels of reliability are required. If the product is to be used in any of the above applications, we will need to enter into a separate product liability agreement.

① We cannot accept responsibility for any defect, which may arise from additional manufacturing of the product (including disassembly and reassembly), after product delivery.

② We cannot accept responsibility for any defect, which may arise after the application of strong external force to the product.

③ We cannot accept responsibility for any defect, which may arise due to the application of static electricity after the product has passed your company's acceptance inspection procedures.

④ When the product is in CFL models, CFL service life and brightness will vary according to the performance of the inverter used, leaks, etc. We cannot accept responsibility for product performance, reliability, or defect, which may arise.

⑤ We cannot accept responsibility for industrial property, which may arise through the use of your product, with exception to those issues relating directly to the structure or method of manufacturing of our product.

⑥ Optrex will not be held responsible for any quality guarantee issue for defect products judged as Optrex-origin longer than 2 (two) years from Optrex production or 1(one) year from Optrex, Optrex America, Optrex Europe, Display LC delivery which ever comes later.