查询DS21Q58供应商 捷多邦，专业PCB打样工厂，24小时加急出货

DS21Q58
E1 Quad Transceiver

www.maxim-ic.com

GENERAL DESCRIPTION

The DS21Q58 E1 quad transceiver contains all the necessary functions for connecting to four E1 lines. The DS21Q58 is a direct replacement for the DS21Q50, with the addition of signaling access and improved interrupt handling. It is composed of a line interface unit (LIU), framer, and a TDM backplane interface, and is controlled through an 8-bit parallel port configured for Intel or Motorola bus operations or serial port operation.

APPLICATIONS

DSLAMs
Routers
IMA and WAN Equipment

PIN CONFIGURATION

TOP VIEW

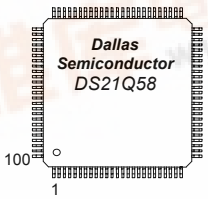

LQFP

Go to www.maxim-ic.com/telecom for a complete list of Telecommunications data sheets, evaluation kits, application notes, and software downloads.

FEATURES

- Four Complete E1 (CEPT) PCM-30/ISDN-PRI Transceivers
- Pin Compatible with the DS21Q50 and DS21Q59
- Short-Haul Line Interfaces
- 32-Bit or 128-Bit Crystal-Less Jitter Attenuator
- Frames to FAS, CAS, and CRC4 Formats
- CAS/CCS Signaling Support
- 4MHz/8MHz/16MHz Clock Synthesizer
- Flexible System Clock with Automatic Source Switching on Loss-of-Clock Source
- Two-Frame Elastic-Store Slip Buffer on the Receive Side
- Interleaving PCM Bus Operation Up to 16.384MHz
- Configurable Parallel and Serial Port Operation
- Detects and Generates Remote and AIS Alarms
- Fully Independent Transmit and Receive Functionality
- Four Separate Loopback Functions
- PRBS Generation/Detection/Error Counting
- 3.3V Low-Power CMOS
- Large Counters for Bipolar and Code Violations, CRC4 Codeword Errors, FAS Word Errors, and E Bits
- Eight Additional User-Configurable Output Pins
- 100-Pin (14mm x 14mm) LQFP Package

ORDERING INFORMATION

PART	TEMP RANGE	PIN-PACKAGE
DS21Q58L	0°C to +70°C	100 LQFP
DS21Q58LN	-40°C to +85°C	100 LQFP

Note: Some revisions of this device may incorporate deviations from published specifications known as errata. Multiple revisions of any device may be simultaneously available through various sales channels. For information about device errata, click here: www.maxim-ic.com/errata.

找PDF pdf.dzsc.com

TABLE OF CONTENTS

1. ACRONYMS 6
2. DETAILED DESCRIPTION 6
3. BLOCK DIAGRAM 7
4. PIN DESCRIPTION 8
   4.1 PIN FUNCTION DESCRIPTIONS 12
5. FUNCTIONAL DESCRIPTION 13
6. HOST INTERFACE PORT 14
   6.1 PARALLEL PORT OPERATION 14
   6.2 SERIAL PORT OPERATION 14
7. REGISTER MAP 16
8. CONTROL, ID, AND TEST REGISTERS 17
   8.1 POWER-UP SEQUENCE 18
   8.2 FRAMER LOOPBACK 21
   8.3 AUTOMATIC ALARM GENERATION 22
   8.4 REMOTE LOOPBACK 22
   8.5 LOCAL LOOPBACK 23
9. STATUS AND INFORMATION REGISTERS 27
   9.1 INTERRUPT HANDLING 28
   9.2 CRC4 SYNC COUNTER 29
10. ERROR COUNT REGISTERS 34
   10.1 BPV OR CV COUNTER 34
   10.2 CRC4 ERROR COUNTER 34
   10.3 E-BIT/PRBS BIT-ERROR COUNTER 35
   10.4 FAS ERROR COUNTER 35
11. SIGNALING OPERATION 36
   11.1 RECEIVE SIGNALING 36
   11.2 TRANSMIT SIGNALING 36
   11.3 CAS OPERATION 36
12. DS0 MONITORING FUNCTION 37
13. PRBS GENERATION AND DETECTION 39
14. SYSTEM CLOCK INTERFACE 40
15. TRANSMIT CLOCK SOURCE 41
16. IDLE CODE INSERTION 41
17. PER-CHANNEL LOOPBACK 42
18. ELASTIC STORE OPERATION 42
19. ADDITIONAL (Sa) AND INTERNATIONAL (Si) BIT OPERATION 43
20. USER-CONFIGURABLE OUTPUTS 45

21. LINE INTERFACE UNIT 47
21.1 RECEIVE CLOCK AND DATA RECOVERY 47
21.1.1 Termination 47
21.2 RECEIVE MONITOR MODE 48
21.3 TRANSMIT WAVESHAPING AND LINE DRIVING 49
21.4 JITTER ATTENUATORS 51
21.4.1 Clock and Data Jitter Attenuators 51
21.4.2 Undedicated Clock Jitter Attenuator 52
22. CODE MARK INVERSION (CMI) 53
23. INTERLEAVED PCM BUS OPERATION 55
24. FUNCTIONAL TIMING DIAGRAMS 57
24.1 RECEIVE 57
24.2 TRANSMIT 59
25. OPERATING PARAMETERS 62
26. AC TIMING PARAMETERS AND DIAGRAMS 63
26.1 MULTIPLEXED BUS AC CHARACTERISTICS 63
26.2 NONMULTIPLEXED BUS AC CHARACTERISTICS 66
26.3 SERIAL PORT 68
26.4 RECEIVE AC CHARACTERISTICS 69
26.5 TRANSMIT AC CHARACTERISTICS 71
26.6 SPECIAL MODES AC CHARACTERISTICS 72
27. PACKAGE INFORMATION 73
28. REVISION HISTORY 74

LIST OF FIGURES

Figure 3-1. Block Diagram 7
Figure 6-1. Serial Port Operation Mode 1 14
Figure 6-2. Serial Port Operation Mode 2 15
Figure 6-3. Serial Port Operation Mode 3 15
Figure 6-4. Serial Port Operation Mode 4 15
Figure 21-1 Typical Monitor Port Application 48
Figure 21-2. External Analog Connections (Basic Configuration) 49
Figure 21-3. External Analog Connections (Protected Interface) 50
Figure 21-4. Transmit Waveform Template 51
Figure 21-5. Jitter Tolerance 52
Figure 21-6. Jitter Attenuation 52
Figure 22-1. CMI Coding 53
Figure 22-2. Example of CMI Code Violation 54
Figure 23-1. IBO Configuration Using Two DS21Q58 Transceivers (Eight E1 Lines) 56
Figure 24-1. Receive Frame and Multiframe Timing 57
Figure 24-2. Receive Boundary Timing (With Elastic Store Disabled) 57
Figure 24-3. Receive Boundary Timing (With Elastic Store Enabled) 57
Figure 24-4. Receive Interleave Bus Operation 58
Figure 24-5. Transmit Frame and Multiframe Timing 59
Figure 24-6. Transmit Boundary Timing 59
Figure 24-7. Transmit Interleave Bus Operation 59
Figure 24-8. Framer Synchronization Flowchart 60
Figure 24-9. Transmit Data Flow 61
Figure 26-1. Intel Bus Read AC Timing (PBTS = 0) 64
Figure 26-2. Intel Bus Write Timing (PBTS = 0) 64
Figure 26-3. Motorola Bus AC Timing (PBTS = 1) 65
Figure 26-4. Intel Bus Read Timing (PBTS = 0) 66
Figure 26-5. Intel Bus Write Timing (PBTS = 0) 67
Figure 26-6. Motorola Bus Read Timing (PBTS = 1) 67
Figure 26-7. Motorola Bus Write Timing (PBTS = 1) 67
Figure 26-8. Serial Bus Timing (BTS1 = 1, BTS0 = 0) 68
Figure 26-9. Receive AC Timing (Receive Elastic Store Disabled) 69
Figure 26-10. Receive AC Timing (Receive Elastic Store Enabled) 70
Figure 26-11. Transmit AC Timing (IBO Disabled) 71
Figure 26-12. Transmit AC Timing (IBO Enabled) 72
Figure 26-13. NRZ Input AC Timing 72

LIST OF TABLES

Table 4-1. Pin Description (Sorted by Function) 8
Table 4-2. Pin Assignments (Sorted by Number) 10
Table 4-3. System (Backplane) Interface Pins 12
Table 4-4. Alternate Jitter Attenuator 12
Table 4-5. Clock Synthesizer 12
Table 4-6. Parallel Port Control Pins 12
Table 4-7. Serial Port Control Pins 13
Table 4-8. Line Interface Pins 13
Table 4-9. Supply Pins 13
Table 6-1. Bus Mode Select 14
Table 7-1. Register Map (Sorted by Address) 16
Table 8-1. Sync/Resync Criteria 19
Table 8-2. G.703 Function 24
Table 8-3. Output Modes 25
Table 9-1. Alarm Criteria 29
Table 13-1. Transmit PRBS Mode Select 39
Table 13-2. Receive PRBS Mode Select 39
Table 14-1. Synthesizer Output Select 40
Table 14-2. System Clock Selection 40
Table 20-1. OUTA and OUTB Function Select 46
Table 21-1 Receive Monitor Mode Gain 48
Table 21-2. Line Build-Out Select in LICR 49
Table 21-3. Transformer Specifications 49
Table 23-1. IBO System Clock Select 55
Table 23-2. IBO Device Assignment 55
Table 26-1. AC Characteristics—Multiplexed Parallel Port 63
Table 26-2. AC Characteristics—Nonmultiplexed Parallel Port 66
Table 26-3. AC Characteristics—Serial Port (BTS1 = 1, BTS0 = 0) 68
Table 26-4. AC Characteristics—Receive 69
Table 26-5. AC Characteristics—Transmit 71
Table 26-6. AC Characteristics—Special Modes 72

1. ACRONYMS

The following abbreviations are used throughout this data sheet:

FAS	Frame Alignment Signal
CAS	Channel Associated Signaling
MF	Multiframe
Si	International Bits
CRC4	Cyclical Redundancy Check
CCS	Common Channel Signaling
Sa	Additional bits
E-Bit	CRC4 Error Bits
LOC	Loss of Clock
TCLK	This generally refers to the transmit rate clock and can reference an actual input signal to the device (TCLK) or an internally derived signal used for transmission.
RCLK	This generally refers to the recovered network clock and can be a reference to an actual output signal from the device or an internal signal.

2. DETAILED DESCRIPTION

The LIU is composed of a transmit interface, receive interface, and a jitter attenuator. The transmit interface generates the necessary waveshapes for driving the network, depending on the type of media used. E1 waveform generation includes G.703 waveshapes for both 75Ω coax and 120Ω twisted cables. The receive interface recovers clock and data from the network. The receive sensitivity adjusts automatically to the incoming signal. The jitter attenuator removes phase jitter from the transmitted or received signal. The crystal-less jitter attenuator only requires a 2.048MHz MCLK and can be placed in either the transmit or receive data paths. An additional feature of the LIU is a code mark inversion (CMI) coder/decoder for interfacing to optical networks.

On the transmit side, the backplane interface section provides clock/data and frame-sync signals to the framer. The framer inserts the appropriate synchronization framing patterns, alarm information, calculates and inserts the CRC codes, and provides the HDB3 (zero code suppression) and alternate mark inversion (AMI) line coding. The receive-side framer decodes AMI and HDB3 line coding, synchronizes to the data stream, reports alarm information, counts framing/coding/CRC errors, and provides clock/data and frame-sync signals to the backplane interface section.

The backplane interface provides a versatile method of sending and receiving data from the host system. The receive elastic store provides a method for interfacing to asynchronous systems. The elastic store also manages slip conditions (asynchronous interface). An interleave bus option (IBO) is provided to allow multiple E1 lines to share a high-speed backplane.

The parallel port provides access for control and configuration of all the DS21Q58's features. Diagnostic capabilities include loopbacks, PRBS pattern generation/detection, and 16-bit loop-up and loop-down code generation and detection. The device fully meets all the latest E1 specifications, including ITU-T G.703, G.704, G.706, G.823, G.732 and I.431 ETS 300 011, ETS 300 233, and ETS 300 166 as well as CTR12 and CTR4.

The DS21Q58 is optimized for high-density termination of E1 lines. Two significant features are included for this type of application: the IBO and a system clock synthesizer feature. The IBO allows up to eight E1 data streams to be multiplexed onto a single high-speed PCM bus without additional external logic. The system clock synthesizer allows any of the E1 lines to be selected as the master source of the clock for the system and for all the transmitters. This is also accomplished without the need of external logic. Each of the four transceivers has a clock and data jitter attenuator that can be assigned to either the transmit or receive path. In addition, there is a single, undedicated clock jitter attenuator that can be hardware configured as needed by the user. Each transceiver also contains a PRBS pattern generator and detector. Figure 23-1 shows a simplified typical application that terminates eight E1 lines (transmit and receive pairs) and combines the data into a single 16.384MHz PCM bus. The 16.384MHz system clock is derived and phase-locked to one of the eight E1 lines. On the receive side of each port, an elastic store provides logical management of any slip conditions due to the asynchronous relationship of the eight E1 lines. In this application all eight transmitters are timed to the selected E1 line.

3. BLOCK DIAGRAM

Figure 3-1. Block Diagram

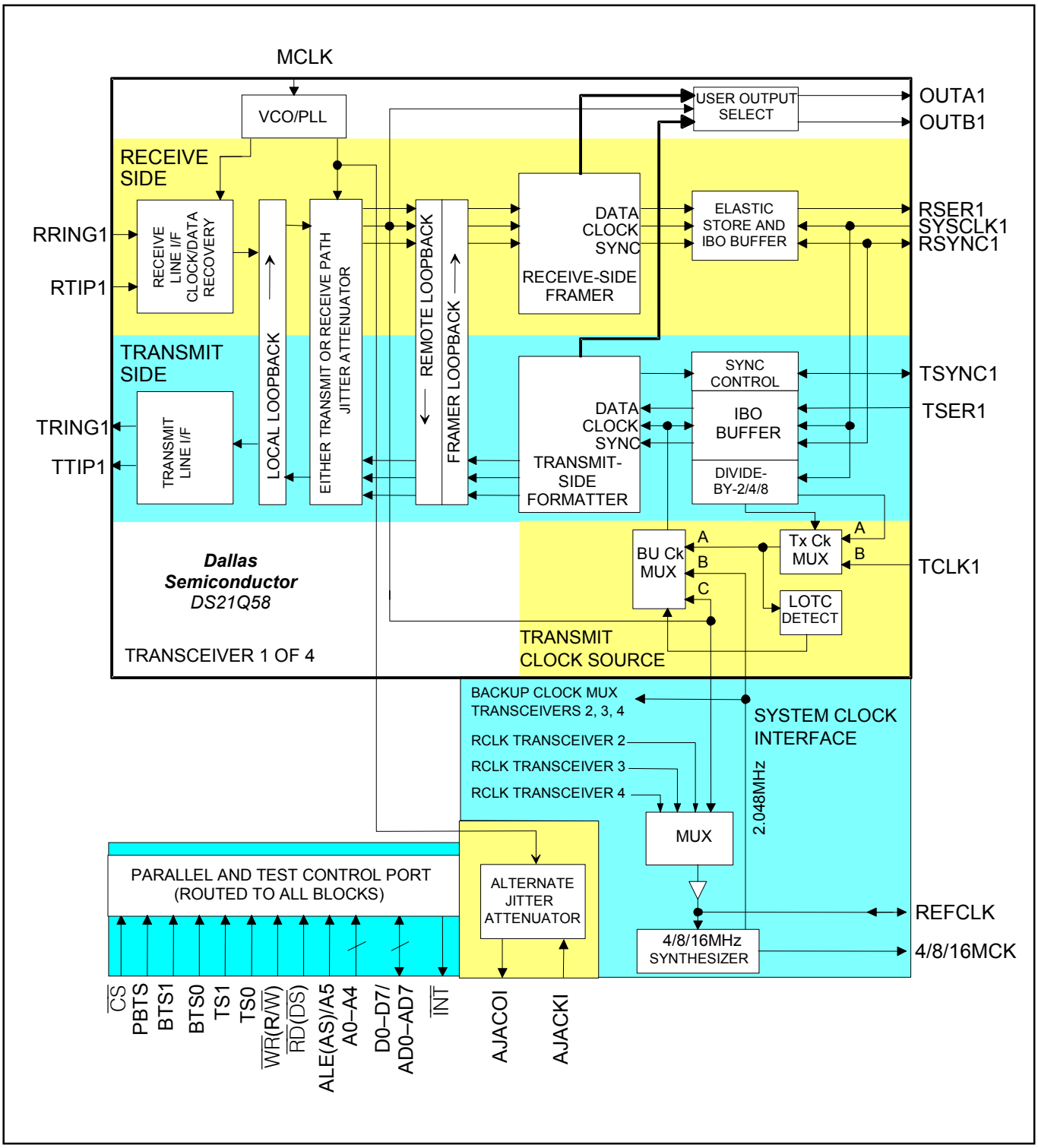

4. PIN DESCRIPTION

Table 4-1. Pin Description (Sorted by Function)

PIN	NAME		TYPE	FUNCTION [SERIAL PORT MODE IN BRACKETS]
	PARALLEL PORT ENABLED	SERIAL PORT ENABLED		
71	4/8/16MCK	—	O	4.096MHz, 8.192MHz, or 16.384MHz Clock
45	A0	ICES	I	Address Bus Bit 0/Serial Port [Input-Clock Edge Select]
46	A1	OCES	I	Address Bus Bit 1/Serial Port [Output-Clock Edge Select]
47	A2	—	I	Address Bus Bit 2
48	A3	—	I	Address Bus Bit 3
49	A4	—	I	Address Bus Bit 4
70	AJACKI	—	I	Alternate Jitter Attenuator Clock Input
69	AJACKO	—	O	Alternate Jitter Attenuator Clock Output
50	ALE (AS)/A5	—	I	Address Latch Enable/Address Bus Bit 5
96	BTS0	—		Bus Type Select 0
97	BTS1	—		Bus Type Select 1
98	$\overline{CS}$	—	I	Chip Select
19	D0/AD0	—	I/O	Data Bus Bit 0/Address/Data Bus Bit 0
20	D1/AD1	—	I/O	Data Bus Bit 1/Address/Data Bus Bit 1
21	D2/AD2	—	I/O	Data Bus Bit 2/Address/Data Bus Bit 2
22	D3/AD3	—	I/O	Data Bus Bit 3/Address/Data Bus Bit 3
23	D4/AD4	—	I/O	Data Bus Bit 4/Address/Data Bus Bit 4
24	D5/AD5	—	I/O	Data Bus Bit 5/Address/Data Bus Bit 5
25	D6/AD6	—	I/O	Data Bus Bit 6/Address/Data Bus Bit 6
44	D7/AD7	SDO	I/O	Data Bus Bit 7/Address/Data Bus Bit 7 [Serial Data Output]
84	DVDD1	—	—	Digital Positive Supply
59	DVDD2	—	—	Digital Positive Supply
34	DVDD3	—	—	Digital Positive Supply
9	DVDD4	—	—	Digital Positive Supply
83	DVSS1	—	—	Digital Signal Ground
58	DVSS2	—	—	Digital Signal Ground
33	DVSS3	—	—	Digital Signal Ground
8	DVSS4	—	—	Digital Signal Ground
94	$\overline{INT}$	—	O	Interrupt
73	MCLK	—	I	Master Clock Input
61	OUTA1	—	O	User-Selectable Output A
36	OUTA2	—	O	User-Selectable Output A
11	OUTA3	—	O	User-Selectable Output A
86	OUTA4	—	O	User-Selectable Output A
60	OUTB1	—	O	User-Selectable Output B
35	OUTB2	—	O	User-Selectable Output B
10	OUTB3	—	O	User-Selectable Output B
85	OUTB4	—	O	User-Selectable Output B
95	PBTS	—	I	Parallel Bus Type Select
75	$\overline{RD}$ ($\overline{DS}$)	SCLK	I	Read Input (Data Strobe) [Serial Port Clock]
72	REFCLK	—	I/O	Reference Clock
67	RRING1	—	I	Receive Analog Ring Input
42	RRING2	—	I	Receive Analog Ring Input
17	RRING3	—	I	Receive Analog Ring Input
92	RRING4	—	I	Receive Analog Ring Input
63	RSER1	—	O	Receive Serial Data
38	RSER2	—	O	Receive Serial Data
13	RSER3	—	O	Receive Serial Data
88	RSER4	—	O	Receive Serial Data
64	RSYNC1	—	I/O	Receive Sync
39	RSYNC2	—	I/O	Receive Sync
14	RSYNC3	—	I/O	Receive Sync

PIN	NAME		TYPE	FUNCTION [SERIAL PORT MODE IN BRACKETS]
	PARALLEL PORT ENABLED	SERIAL PORT ENABLED		
89	RSYNC4	—	I/O	Receive Sync
66	RTIP1	—	I	Receive Analog Tip Input
41	RTIP2	—	I	Receive Analog Tip Input
16	RTIP3	—	I	Receive Analog Tip Input
91	RTIP4	—	I	Receive Analog Tip Input
93	RVDD1	—	—	Receive Analog Positive Supply
68	RVDD2	—	—	Receive Analog Positive Supply
43	RVDD3	—	—	Receive Analog Positive Supply
18	RVDD4	—	—	Receive Analog Positive Supply
90	RVSS1	—	—	Receive Analog Signal Ground
65	RVSS2	—	—	Receive Analog Signal Ground
40	RVSS3	—	—	Receive Analog Signal Ground
15	RVSS4	—	—	Receive Analog Signal Ground
62	SYSCLK1	—	I	Transmit/Receive System Clock
37	SYSCLK2	—	I	Transmit/Receive System Clock
12	SYSCLK3	—	I	Transmit/Receive System Clock
87	SYSCLK4	—	I	Transmit/Receive System Clock
80	TCLK1	—	I	Transmit Clock
55	TCLK2	—	I	Transmit Clock
30	TCLK3	—	I	Transmit Clock
5	TCLK4	—	I	Transmit Clock
79	TRING1	—	O	Transmit Analog Ring Output
54	TRING2	—	O	Transmit Analog Ring Output
29	TRING3	—	O	Transmit Analog Ring Output
4	TRING4	—	O	Transmit Analog Ring Output
99	TS0	—	I	Transceiver Select 0
100	TS1	—	I	Transceiver Select 1
81	TSER1	—	I	Transmit Serial Data
56	TSER2	—	I	Transmit Serial Data
31	TSER3	—	I	Transmit Serial Data
6	TSER4	—	I	Transmit Serial Data
82	TSYNC1	—	I/O	Transmit Sync
57	TSYNC2	—	I/O	Transmit Sync
32	TSYNC3	—	I/O	Transmit Sync
7	TSYNC4	—	I/O	Transmit Sync
76	TTIP1	—	O	Transmit Analog Tip Output
51	TTIP2	—	O	Transmit Analog Tip Output
26	TTIP3	—	O	Transmit Analog Tip Output
1	TTIP4	—	O	Transmit Analog Tip Output
78	TVDD1	—	—	Transmit Analog Positive Supply
53	TVDD2	—	—	Transmit Analog Positive Supply
28	TVDD3	—	—	Transmit Analog Positive Supply
3	TVDD4	—	—	Transmit Analog Positive Supply
77	TVSS1	—	—	Transmit Analog Signal Ground
52	TVSS2	—	—	Transmit Analog Signal Ground
27	TVSS3	—	—	Transmit Analog Signal Ground
2	TVSS4	—	—	Transmit Analog Signal Ground
74	$\overline{WR}$ (R/$\overline{W}$)	SDI	I	Write Input (Read/Write) [Serial Data Input]

Note: EQVSS lines are wired to RVSS lines.

Table 4-2. Pin Assignments (Sorted by Number)

PIN	NAME		TYPE	FUNCTION [Serial Port Mode in Brackets]
	PARALLEL PORT ENABLED	SERIAL PORT ENABLED		
1	TTIP4	—	O	Transmit Analog Tip Output
2	TVSS4	—	—	Transmit Analog Signal Ground
3	TVDD4	—	—	Transmit Analog Positive Supply
4	TRING4	—	O	Transmit Analog Ring Output
5	TCLK4	—	I	Transmit Clock
6	TSER4	—	I	Transmit Serial Data
7	TSYNC4	—	I/O	Transmit Sync
8	DVSS4	—	—	Digital Signal Ground
9	DVDD4	—	—	Digital Positive Supply
10	OUTB3	—	O	User-Selectable Output B
11	OUTA3	—	O	User-Selectable Output A
12	SYSCLK3	—	I	Transmit/Receive System Clock
13	RSER3	—	O	Receive Serial Data
14	RSYNC3	—	I/O	Receive Sync
15	RVSS4	—	—	Receive Analog Signal Ground
16	RTIP3	—	I	Receive Analog Tip Input
17	RRING3	—	I	Receive Analog Ring Input
18	RVDD4	—	—	Receive Analog Positive Supply
19	D0/AD0	—	I/O	Data Bus Bit 0/Address/Data Bus Bit 0
20	D1/AD1	—	I/O	Data Bus Bit 1/Address/Data Bus Bit 1
21	D2/AD2	—	I/O	Data Bus Bit 2/Address/Data Bus Bit 2
22	D3/AD3	—	I/O	Data Bus Bit 3/Address/Data Bus Bit 3
23	D4/AD4	—	I/O	Data Bus Bit 4/Address/Data Bus Bit 4
24	D5/AD5	—	I/O	Data Bus Bit 5/Address/Data Bus Bit 5
25	D6/AD6	—	I/O	Data Bus Bit 6/Address/Data Bus Bit 6
26	TTIP3	—	O	Transmit Analog Tip Output
27	TVSS3	—	—	Transmit Analog Signal Ground
28	TVDD3	—	—	Transmit Analog Positive Supply
29	TRING3	—	O	Transmit Analog Ring Output
30	TCLK3	—	I	Transmit Clock
31	TSER3	—	I	Transmit Serial Data
32	TSYNC3	—	I/O	Transmit Sync
33	DVSS3	—	—	Digital Signal Ground
34	DVDD3	—	—	Digital Positive Supply
35	OUTB2	—	O	User-Selectable Output B
36	OUTA2	—	O	User-Selectable Output A
37	SYSCLK2	—	I	Transmit/Receive System Clock
38	RSER2	—	O	Receive Serial Data
39	RSYNC2	—	I/O	Receive Sync
40	RVSS3	—	—	Receive Analog Signal Ground
41	RTIP2	—	I	Receive Analog Tip Input
42	RRING2	—	I	Receive Analog Ring Input
43	RVDD3	—	—	Receive Analog Positive Supply
44	D7/AD7	SDO	I/O	Data Bus Bit 7/Address/Data Bus Bit 7 [Serial Data Output]
45	A0	ICES	I	Address Bus Bit 0/Serial Port [Input-Clock Edge Select]
46	A1	OCES	I	Address Bus Bit 1/Serial Port [Output-Clock Edge Select]
47	A2	—	I	Address Bus Bit 2
48	A3	—	I	Address Bus Bit 3
49	A4	—	I	Address Bus Bit 4
50	ALE (AS)/A5	—	I	Address Latch Enable/Address Bus Bit 5
51	TTIP2	—	O	Transmit Analog Tip Output
52	TVSS2	—	—	Transmit Analog Signal Ground
53	TVDD2	—	—	Transmit Analog Positive Supply
54	TRING2	—	O	Transmit Analog Ring Output

PIN	NAME		TYPE	FUNCTION [Serial Port Mode in Brackets]
	PARALLEL PORT ENABLED	SERIAL PORT ENABLED		
55	TCLK2	—	I	Transmit Clock
56	TSER2	—	I	Transmit Serial Data
57	TSYNC2	—	I/O	Transmit Sync
58	DVSS2	—	—	Digital Signal Ground
59	DVDD2	—	—	Digital Positive Supply
60	OUTB1	—	O	User-Selectable Output B
61	OUTA1	—	O	User-Selectable Output A
62	SYSCLK1	—	I	Transmit/Receive System Clock
63	RSER1	—	O	Receive Serial Data
64	RSYNC1	—	I/O	Receive Sync
65	RVSS2	—	—	Receive Analog Signal Ground
66	RTIP1	—	I	Receive Analog Tip Input
67	RRING1	—	I	Receive Analog Ring Input
68	RVDD2	—	—	Receive Analog Positive Supply
69	AJACKO	—	O	Alternate Jitter Attenuator Clock Output
70	AJACKI	—	I	Alternate Jitter Attenuator Clock Input
71	4/8/16MCK	—	O	4.096MHz, 8.192MHz, or 16.384MHz Clock
72	REFCLK	—	I/O	Reference Clock
73	MCLK	—	I	Master Clock Input
74	$\overline{WR}$ (R/$\overline{W}$)	SDI	I	Write Input (Read/Write) [Serial Data Input]
75	$\overline{RD}$ ($\overline{DS}$)	SCLK	I	Read Input (Data Strobe) [Serial Port Clock]
76	TTIP1	—	O	Transmit Analog Tip Output
77	TVSS1	—	—	Transmit Analog Signal Ground
78	TVDD1	—	—	Transmit Analog Positive Supply
79	TRING1	—	O	Transmit Analog Ring Output
80	TCLK1	—	I	Transmit Clock
81	TSER1	—	I	Transmit Serial Data
82	TSYNC1	—	I/O	Transmit Sync
83	DVSS1	—	—	Digital Signal Ground
84	DVDD1	—	—	Digital Positive Supply
85	OUTB4	—	O	User-Selectable Output B
86	OUTA4	—	O	User-Selectable Output A
87	SYSCLK4	—	I	Transmit/Receive System Clock
88	RSER4	—	O	Receive Serial Data
89	RSYNC4	—	I/O	Receive Sync
90	RVSS1	—	—	Receive Analog Signal Ground
91	RTIP4	—	I	Receive Analog Tip Input
92	RRING4	—	I	Receive Analog Ring Input
93	RVDD1	—	—	Receive Analog Positive Supply
94	$\overline{INT}$	—	O	Interrupt
95	PBTS	—	I	Parallel Bus Type Select
96	BTS0	—	—	Bus Type Select 0
97	BTS1	—	—	Bus Type Select 1
98	$\overline{CS}$	—	I	Chip Select
99	TS0	—	I	Transceiver Select 0
100	TS1	—	I	Transceiver Select 1

Note: EQVSS lines are wired to RVSS.

4.1 Pin Function Descriptions

Table 4-3. System (Backplane) Interface Pins

NAME	TYPE	FUNCTION
TCLK	I	**Transmit Clock.** TCLK is a 2.048MHz primary clock that is used to clock data through the transmit formatter.
TSER	I	**Transmit Serial Data.** Transmit NRZ serial data. TSER is sampled on the falling edge of TCLK when IBO is disabled. It is sampled on the falling edge of SYSCLK when the IBO function is enabled.
TSYNC	I/O	**Transmit Sync.** As an input, a pulse at this pin establishes either frame or multiframe boundaries for the transmitter. As an output, it can be programmed to output either a frame or multiframe pulse.
RSER	O	**Receive Serial Data.** RSER is the received NRZ serial data. RSER is updated on the rising edges of RCLK when the receive elastic store is disabled. It is updated on the rising edges of SYSCLK when the receive elastic store is enabled.
RSYNC	I/O	**Receive Sync.** An extracted pulse one RCLK wide is output at this pin that identifies either frame or CAS/CRC4 multiframe boundaries. If the receive elastic store is enabled, this pin can be enabled to be an input at which a frame-boundary pulse synchronous with SYSCLK is applied.
SYSCLK	I	**System Clock.** SYSCLK is a 2.048MHz clock used to clock data out of the receive elastic store. When the IBO is enabled SYSCLK can be a 4.096MHz, 8.192MHz, or 16.384MHz clock.
OUTA	O	**User-Selectable Output A.** OUTA is a multifunction pin the host can program to output various alarms, clocks, or data, or be used to control external circuitry.
OUTB	O	**User-Selectable Output B.** OUTB is a multifunction pin the host can program to output various alarms, clocks, or data, or be used to control external circuitry.

Table 4-4. Alternate Jitter Attenuator

NAME	TYPE	FUNCTION
AJACKI	I	**Alternate Jitter Attenuator Clock Input.** AJACKI is clock input to the alternate jitter attenuator.
AJACKO	O	**Alternate Jitter Attenuator Clock Output.** AJACKO is clock output of the alternate jitter attenuator.

Table 4-5. Clock Synthesizer

NAME	TYPE	FUNCTION
4/8/16MCK	O	**4.096MHz/8.192MHz/16.384MHz Clock Output.** 4/8/16MCK is a 4.096MHz, 8.192MHz, or 16.384MHz clock output that is referenced to one of the four recovered line clocks (RCLKs) or to an external 2.048MHz reference.
REFCLK	I/O	**Reference Clock.** REFCLK can be configured as an output to source a 2.048MHz reference clock or as an input to supply a 2.048MHz reference clock from an external source to the clock synthesizer.

Table 4-6. Parallel Port Control Pins

NAME	TYPE	FUNCTION
$\overline{\text{INT}}$	O	**Interrupt.** $\overline{\text{INT}}$ flags the host controller during conditions and change of conditions defined in status registers 1 and 2 and the HDLC status register. It is an active-low, open-drain output.
BTS0	I	**Bus Type Select Bit 0.** BTS0 is used with BTS1 to select between muxed, nonmuxed, serial bus operation, and output high-Z mode.
BTS1	I	**Bus Type Select Bit 1.** BTS1 is used with BTS0 to select between muxed, nonmuxed, serial bus operation, and output high-Z mode.
TS0	I	**Transceiver Select Bit 0.** TS0 is used with TS1 to select one of four transceivers.
TS1	I	**Transceiver Select Bit 1.** TS1 is used with TS0 to select one of four transceivers.
PBTS	I	**Parallel Bus Type Select.** PBTS is used to select between Motorola and Intel parallel bus types.
AD0 to AD7/SDO	I/O	**Data Bus or Address/Data Bus [D0 to D6], Data Bus or Address/Data Bus [D7]/Serial Port Output.** In nonmultiplexed bus operation (MUX = 0), these pins serve as the data bus. In multiplexed bus operation (MUX = 1), they serve as an 8-bit multiplexed address/data bus.
A0 to A4	I	**Address Bus.** In nonmultiplexed bus operation, these pins serve as the address bus. In multiplexed bus operation, these pins are not used and should be wired low.
$\overline{\text{RD}}$ ($\overline{\text{DS}}$)/SCLK	I	**Read Input—Data Strobe/Serial Port Clock.** $\overline{\text{RD}}$ and $\overline{\text{DS}}$ are active-low signals. DS is active high when in multiplexed mode (Section 26).
$\overline{\text{CS}}$	I	**Chip Select.** $\overline{\text{CS}}$ must be low to read or write to the device. It is an active-low signal.
ALE (AS)/A5	I	**Address Latch Enable (Address Strobe) or A6.** In nonmultiplexed bus operation, this pin serves as the upper address bit. In multiplexed bus operation, it demultiplexes the bus on a positive-going edge.
$\overline{\text{WR}}$ (R/$\overline{\text{W}}$)/SDI	I	**Write Input (Read/Write)/Serial Port Data Input, Active Low**

Table 4-7. Serial Port Control Pins

NAME	TYPE	FUNCTION
SDO	O	**Serial Port Data Output.** Data at this output can be updated on the rising or falling edge of SCLK.
SDI	I	**Serial Port Data Input.** Data at this input can be sampled on the rising or falling edge of SCLK.
ICES	I	**Input Clock-Edge Select.** ICES is used to select which SCLK clock edge samples data at SDI.
OCES	I	**Output Clock-Edge Select.** OCES is used to select which SCLK clock edge updates data at SDO.
SCLK	I	**Serial Port Clock.** SCLK is used to clock data into and out of the serial port.

Table 4-8. Line Interface Pins

NAME	TYPE	FUNCTION
MCLK	I	**Master Clock Input.** A 2.048MHz (±50ppm) clock source with TTL levels is applied at this pin. This clock is used internally for both clock/data recovery and for jitter attenuation.
RTIP and RRING	I	**Receive Tip and Ring.** RTIP and RRING are analog inputs for clock recovery circuitry. These pins connect through a 1:1 step-up transformer to the E1 line. See Section 21 for details.
TTIP and TRING	O	**Transmit Tip and Ring.** TTIP and TRING are analog line-driver outputs. These pins connect through a 1:2 step-up transformer to the E1 line. See Section 21 for details.

Table 4-9. Supply Pins

NAME	TYPE	FUNCTION
DVDD	Supply	**Digital Positive Supply.** 3.3V ±5%. Should be wired to the RVDD and TVDD pins.
RVDD	Supply	**Receive Analog Positive Supply.** 3.3V ±5%. Should be wired to the DVDD and TVDD pins.
TVDD	Supply	**Transmit Analog Positive Supply.** 3.3V ±5%. Should be wired to the RVDD and DVDD pins.
DVSS	Supply	**Digital Signal Ground.** 0V. Should be wired to the RVSS and TVSS pins.
RVSS	Supply	**Receive Analog Signal Ground.** 0V. Should be wired to DVSS and TVSS.
TVSS	Supply	**Transmit Analog Signal Ground.** 0V. Should be wired to DVSS and RVSS.

5. FUNCTIONAL DESCRIPTION

The analog AMI/HDB3 waveform off the E1 line is transformer-coupled into the DS21Q58's RRING and RTIP pins. The device recovers clock and data from the analog signal and passes it through the jitter attenuation mux to the receive framer, where the digital serial stream is analyzed to locate the framing/multiframe pattern. The DS21Q58 contains an active filter that reconstructs the analog-received signal for the nonlinear losses that occur in transmission. The device has a usable receive sensitivity of 0dB to -12dB. The receive framer locates FAS frame and CRC and CAS multiframe boundaries as well as detects incoming alarms including carrier loss, loss of synchronization, AIS, and remote alarm. If needed, the receive elastic store can be enabled to absorb the phase and frequency differences between the recovered E1 data stream and an asynchronous backplane clock, which is provided at the SYSCLK input. The clock applied at the SYSCLK input can be either a 2.048MHz/4.096MHz/8.192MHz or 16.384MHz clock. The transmit framer is independent of the receive framer in both the clock requirements and characteristics. The transmit formatter provides the necessary frame/multiframe data overhead for E1 transmission.

Note: This data sheet assumes a particular nomenclature of the E1 operating environment. In each 125µs frame, there are 32 8-bit time slots numbered 0 to 31. Time slot 0 is transmitted first and received first. These 32 time slots are also referred to as channels with a numbering scheme of 1 to 32. Time slot 0 is identical to channel 1, time slot 1 is identical to channel 2, and so on. Each time slot (or channel) is made up of eight bits that are numbered 1 to 8. Bit number 1, MSB, is transmitted first. Bit number 8, the LSB, is transmitted last. The term "locked" is used to refer to two clock signals that are phase-locked or frequency-locked or derived from a common clock (i.e., an 8.192MHz clock can be locked to a 2.048MHz clock if they share the same 8kHz component).

6. HOST INTERFACE PORT

The DS21Q58 is controlled through either a nonmultiplexed bus, a multiplexed bus, or serial interface bus by an external microcontroller or microprocessor. The device can operate with either Intel or Motorola bus timing configurations. See Table 6-1 for a description of the bus configurations. Motorola bus signals are listed in parentheses (). See the timing diagrams in the *AC Electrical Characteristics* in Section 26 for more details.

Table 6-1. Bus Mode Select

PBTS	BTS1	BTS0	PARALLEL PORT MODE
0	0	0	Intel Multiplexed
0	0	1	Intel Nonmultiplexed
1	0	0	Motorola Multiplexed
1	0	1	Motorola Nonmultiplexed
X	1	0	Serial
X	1	1	TEST (Outputs High-Z)

6.1 Parallel Port Operation

When using the parallel interface on the DS21Q58 (BTS1 = 0) the user has the option for either multiplexed bus operation (BTS1 = 0, BTS0 = 0) or nonmultiplexed bus operation (BTS1 = 0, BTS0 = 1). The DS21Q58 can operate with either Intel or Motorola bus timing configurations. If the PBTS pin is wired low, Intel timing is selected; if wired high, Motorola timing is selected. All Motorola bus signals are listed in parentheses (). See the timing diagrams in Section 26 for more details.

6.2 Serial Port Operation

Setting the BTS1 pin = 1 and BTS0 pin = 0 enables the serial bus interface on the DS21Q58. Port read/write timing is unrelated to the system transmit and receive timing, allowing asynchronous reads or writes by the host. See Section 26 for the AC timing of the serial port. All serial port accesses are LSB first. See Figure 6-1, Figure 6-2, Figure 6-3, and Figure 6-4 for more details.

Reading or writing to the internal registers requires writing one address/command byte prior to transferring register data. The first bit written (LSB) of the address/command byte specifies whether the access is a read (1) or a write (0). The next five bits identify the register address. The next bit is reserved and must be set to 0 for proper operation. The last bit (MSB) of the address/command byte enables the burst mode when set to 1. The burst mode causes all registers to be consecutively written or read.

All data transfers are initiated by driving the $\overline{CS}$ input low. When input-clock edge select (ICES) is low, input data is latched on the rising edge of SCLK; when ICES is high, input data is latched on the falling edge of SCLK. When output-clock edge select (OCES) is low, data is output on the falling edge of SCLK; when OCES is high, data is output on the rising edge of SCLK. Data is held until the next falling or rising edge. All data transfers are terminated if the $\overline{CS}$ input transitions high. Port control logic is disabled and SDO is tri-stated when $\overline{CS}$ is high.

Figure 6-1. Serial Port Operation Mode 1

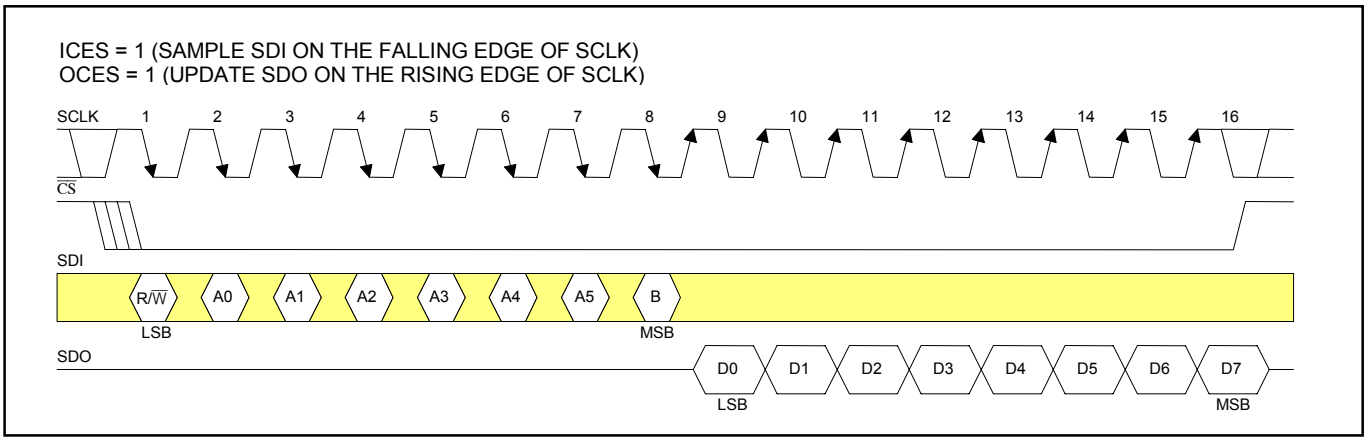

Figure 6-2. Serial Port Operation Mode 2

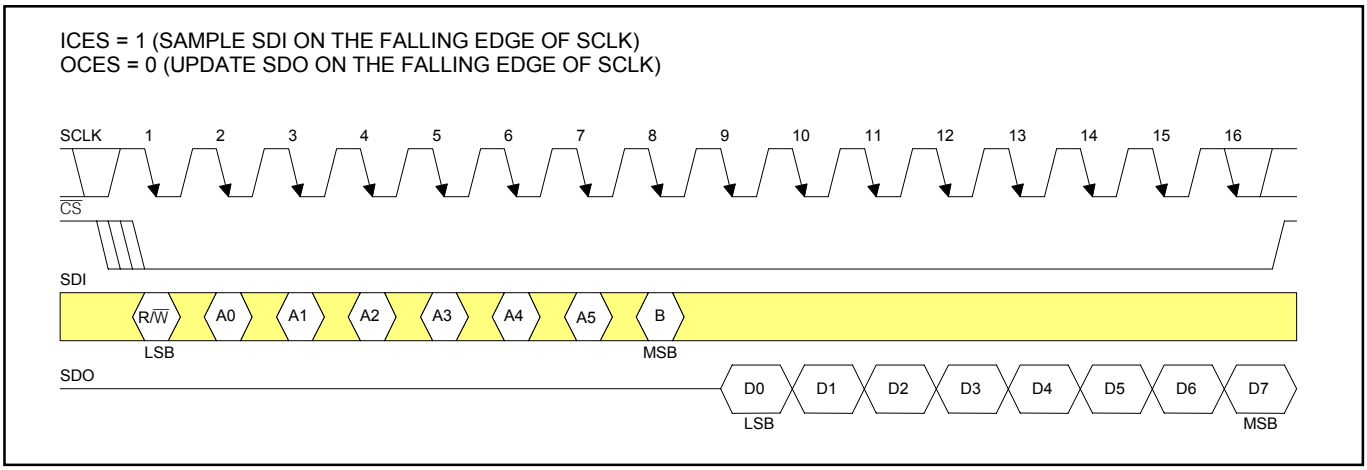

Figure 6-3. Serial Port Operation Mode 3

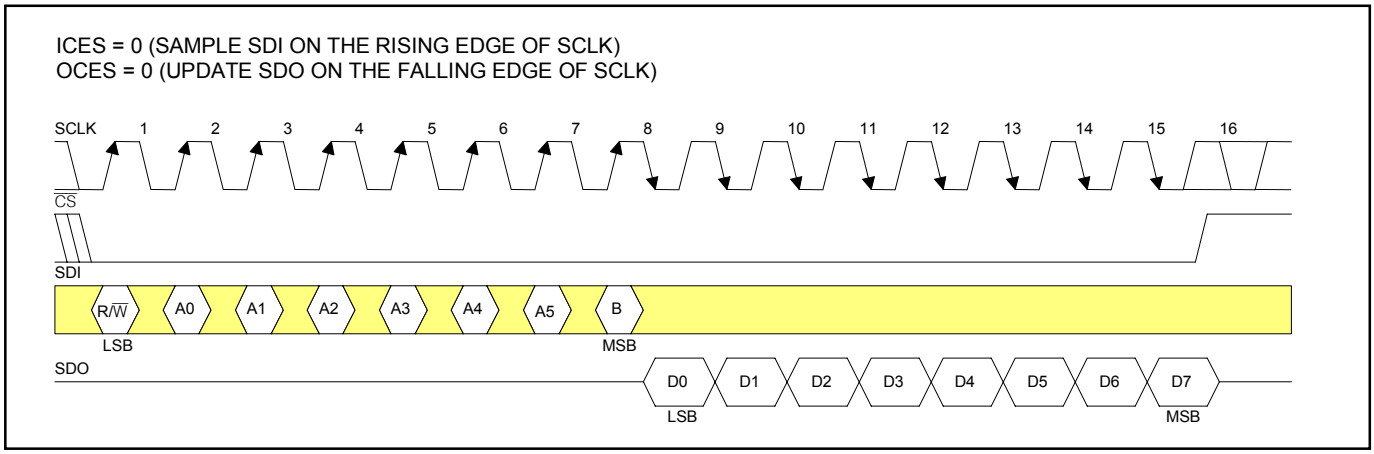

Figure 6-4. Serial Port Operation Mode 4

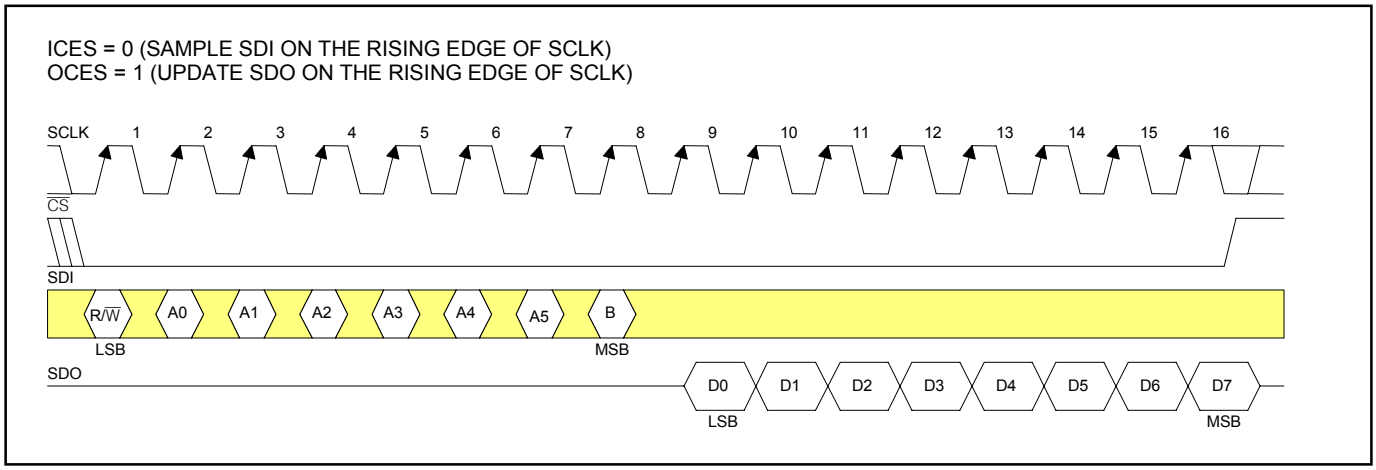

7. REGISTER MAP

Table 7-1. Register Map (Sorted by Address)

ADDRESS	TYPE	NAME	FUNCTION
00	R	VCR1	BPV or Code Violation Count 1
01	R	VCR2	BPV or Code Violation Count 2
02	R	CRCCR1	CRC4 Error Count 1
03	R	CRCCR2	CRC4 Error Count 2
04	R	EBCR1	E-Bit Count 1/PRBS Error Count 1
05	R	EBCR2	E-Bit Count 2/PRBS Error Count 2
06	R	FASCR1	FAS Error Count 1
07	R	FASCR2	FAS Error Count 2
08	R/W	RIR	Receive Information
09	R	SSR	Synchronizer Status
0A	R/W	SR1	Status 1
0B	R/W	SR2	Status 2
0C	—	—	Unused
0D	—	—	Unused
0E	—	—	Unused
0F	R	IDR	Device ID (Note 1)
10	R/W	RCR	Receive Control
11	R/W	TCR	Transmit Control 1
12	R/W	CCR1	Common Control 1
13	R/W	CCR2	Common Control 2
14	R/W	CCR3	Common Control 3
15	R/W	CCR4	Common Control 4
16	R/W	CCR5	Common Control 5
17	R/W	LICR	Line Interface Control Register
18	R/W	IMR1	Interrupt Mask 1
19	R/W	IMR2	Interrupt Mask 2
1A	R/W	OUTAC	Output A Control
1B	R/W	OUTBC	Output B Control
1C	R/W	IBO	Interleave Bus Operation Register
1D	R/W	SCICR	System Clock-Interface Control Register (Note 1)
1E	R/W	TEST3 (set to 00h)	Test 2 (Note 2)
1F	R/W	CCR7	Common Control 7
20	R/W	TAF	Transmit Align Frame
21	R/W	TNAF	Transmit Nonalign Frame
22	R	TDS0M	Transmit DS0 Monitor
23	R/W	TIDR	Transmit Idle Definition
24	R/W	TIR1	Transmit Idle 1
25	R/W	TIR2	Transmit Idle 2
26	R/W	TIR3	Transmit Idle 3
27	R/W	TIR4	Transmit Idle 4
28	R	RAF	Receive Align Frame
29	R	RNAF	Receive Nonalign Frame
2A	R	RDS0M	Receive DS0 Monitor
2B	R/W	PCLB1	Per-Channel Loopback Control 1
2C	R/W	PCLB2	Per-Channel Loopback Control 2
2D	R/W	PCLB3	Per-Channel Loopback Control 3
2E	R/W	PCLB4	Per-Channel Loopback Control 4
2F	R/W	CCR6	Common Control 6
30	R/W	SA1	Signaling Access Register 1
31	R/W	SA2	Signaling Access Register 2
32	R/W	SA3	Signaling Access Register 3
33	R/W	SA4	Signaling Access Register 4
34	R/W	SA5	Signaling Access Register 5
35	R/W	SA6	Signaling Access Register 6
36	R/W	SA7	Signaling Access Register 7

ADDRESS	TYPE	NAME	FUNCTION
37	R/W	SA8	Signaling Access Register 8
38	R/W	SA9	Signaling Access Register 9
39	R/W	SA10	Signaling Access Register 10
3A	R/W	SA11	Signaling Access Register 11
3B	R/W	SA12	Signaling Access Register 12
3C	R/W	SA13	Signaling Access Register 13
3D	R/W	SA14	Signaling Access Register 14
3E	R/W	SA15	Signaling Access Register 15
3F	R/W	SA16	Signaling Access Register 16

Note 1: The device ID register and the system clock-interface control register exist in Transceiver 1 only (TS0, TS1 = 0).
Note 2: Only the factory uses the test register; this register must be cleared (set to all zeros) on power-up initialization to ensure proper operation.

8. CONTROL, ID, AND TEST REGISTERS

The DS21Q58 operation is configured through a set of nine control registers. Typically, the control registers are only accessed when the system is first powered up. Once the device has been initialized, the control registers only need to be accessed when there is a change in the system configuration. There is one receive control register (RCR), one transmit control register (TCR), and seven common control registers (CCR1 to CCR7). Each of these registers is described in this section.

Address 0Fh has a device identification register (IDR). The four MSBs of this read-only register are fixed to 1 0 0 1, indicating that a DS21Q58 E1 quad transceiver is present. The lower 4 bits of the IDR are used to identify the revision of the device. This register exists in Transceiver 1 only (TS0, TS1 = 0).

The factory in testing the DS21Q58 uses the test register at addresses 1E. On power-up, the test register should be set to 00h for the DS21Q58 to properly operate.

Register Name: **IDR**
Register Description: **Device Identification Register**
Register Address: **0F Hex**

Bit #	7	6	5	4	3	2	1	0
Name	1	0	1	0	ID3	ID2	ID1	ID0

NAME	BIT	FUNCTION
1	7	**Bit 7**
0	6	**Bit 6**
1	5	**Bit 5**
0	4	**Bit 4**
ID3	3	**Chip Revision Bit 3.** MSB of a decimal code that represents the chip revision.
ID2	1	**Chip Revision Bit 2**
ID1	2	**Chip Revision Bit 1**
ID0	0	**Chip Revision Bit 0.** LSB of a decimal code that represents the chip revision.

8.1 Power-Up Sequence

On power-up and after the supplies are stable, the DS21Q58 should be configured for operation by writing to all the internal registers (this includes setting the test register to 00h) since the contents of the internal registers cannot be predicted on power-up. The LIRST (CCR5.4) should be toggled from 0 to 1 to reset the line interface circuitry. (It takes the device about 40ms to recover from the LIRST bit being toggled.) After the SYSCLK input is stable, the ESR bits (CCR4.5 and CCR4.6) should be toggled from 0 to 1 (this step can be skipped if the elastic store is disabled).

Register Name: **RCR**
Register Description: **Receive Control Register**
Register Address: **10 Hex**

Bit #	7	6	5	4	3	2	1	0
Name	RSMF	RSM	RSIO	RESE	—	FRC	SYNCE	RESYNC

NAME	BIT	FUNCTION
RSMF	7	**RSYNC Multiframe Function.** Only used if the RSYNC pin is programmed in the multiframe mode (RCR.6 = 1). 0 = RSYNC outputs CAS multiframe boundaries. 1 = RSYNC outputs CRC4 multiframe boundaries.
RSM	6	**RSYNC Mode Select** 0 = frame mode (see the timing diagrams in Section 24.1) 1 = multiframe mode (see the timing diagrams in Section 24.1)
RSIO	5	**RSYNC I/O Select.** (Note: This bit must be set to 0 when RCR .4 = 0.) 0 = RSYNC is an output (depends on RCR.6) 1 = RSYNC is an input (only valid if elastic store enabled)
RESE	4	**Receive Elastic Store Enable** 0 = elastic store is bypassed 1 = elastic store is enabled
—	3	**Unused.** Should be set = 0 for proper operation.
FRC	2	**Frame Resync Criteria** 0 = resync if FAS received in error three consecutive times 1 = resync if FAS or bit 2 of non-FAS is received in error three consecutive times
SYNCE	1	**Sync Enable** 0 = auto resync enabled 1 = auto resync disabled
RESYNC	0	**Resync.** When toggled from low to high, a resync is initiated. Must be cleared and set again for a subsequent resync.

Table 8-1. Sync/Resync Criteria

FRAME OR MULTIFRAME LEVEL	SYNC CRITERIA	RESYNC CRITERIA	ITU SPEC.
FAS	FAS present in frame N and N + 2, and FAS not present in frame N + 1	Three consecutive incorrect FAS received; alternate (RCR1.2 = 1): if the above criteria is met or three consecutive incorrect bit 2 of non-FAS received	G.706 4.1.1 4.1.2
CRC4	Two valid MF alignment words found within 8ms	915 or more CRC4 codewords out of 1000 received in error	G.706 4.2 and 4.3.2
CAS	Valid MF alignment word found and previous time slot 16 contains code other than all zeros	Two consecutive MF alignment words received in error	G.732 5.2

Register Name: **TCR**
Register Description: **Transmit Control Register**
Register Address: **11 Hex**

Bit #	7	6	5	4	3	2	1	0
Name	IFSS	TFPT	AEBE	TUA1	TSiS	TSA1	TSM	TSIO

NAME	BIT	FUNCTION
IFSS	7	**Internal Frame-Sync Select** 0 = TSYNC normal 1 = if TSYNC is in the INPUT mode (TSIO = 0), then TSYNC is internally replaced by the recovered receive frame sync; the TSYNC pin is ignored 1 = if TSYNC is in the OUTPUT mode (TSIO = 1), then TSYNC outputs the recovered multiframe frame sync
TFPT	6	**Transmit Time Slot 0 Pass Through** 0 = FAS bits/Sa bits/remote alarm sourced internally from the TAF and TNAF registers 1 = FAS bits/Sa bits/remote alarm sourced from TSER
AEBE	5	**Automatic E-Bit Enable** 0 = E-bits not automatically set in the transmit direction 1 = E-bits automatically set in the transmit direction
TUA1	4	**Transmit Unframed All Ones** 0 = transmit data normally 1 = transmit an unframed all-ones code
TSiS	3	**Transmit International Bit Select** 0 = sample Si bits at TSER pin 1 = source Si bits from TAF and TNAF registers (In this mode, TCR.6 must be set to 0)
TSA1	2	**Transmit Signaling All Ones** 0 = normal operation 1 = force time slot 16 in every frame to all ones
TSM	1	**TSYNC Mode Select** 0 = frame mode (see the timing diagrams in Section 24.2) 1 = CAS and CRC4 multiframe mode (see the timing diagrams in Section 24.2)
TSIO	0	**TSYNC I/O Select** 0 = TSYNC is an input 1 = TSYNC is an output

Note: See Figure 24-9 for more details about how the transmit control register affects DS21Q58 operation.

Register Name: **CCR1**
Register Description: **Common Control Register 1**
Register Address: **12 Hex**

Bit #	7	6	5	4	3	2	1	0
Name	FLB	THDB3	TIBE	TCRC4	RSMS	RHDB3	PCLMS	RCRC4

NAME	BIT	FUNCTION
FLB	7	**Framer Loopback.** See Section 8.2 for details. 0 = loopback disabled 1 = loopback enabled
THDB3	6	**Transmit HDB3 Enable** 0 = HDB3 disabled 1 = HDB3 enabled
TIBE	5	**Transmit Insert Bit Error.** A 0-to-1 transition causes a single bit error to be inserted in the transmit path.
TCRC4	4	**Transmit CRC4 Enable** 0 = CRC4 disabled 1 = CRC4 enabled
RSMS	3	**Receive Signaling Mode Select** 0 = CAS signaling mode. Receiver searches for the CAS MF alignment signal. 1 = CCS signaling mode. Receiver does not search for the CAS MF alignment signal.
RHDB3	2	**Receive HDB3 Enable** 0 = HDB3 disabled 1 = HDB3 enabled
PCLMS	1	**Per-Channel Loopback Mode Select.** See Section 17 for details. 0 = remote per-channel loopback 1 = local per-channel loopback
RCRC4	0	**Receive CRC4 Enable** 0 = CRC4 disabled 1 = CRC4 enabled

8.2 Framer Loopback

When CCR1.7 is set to 1, the DS21Q58 enters a framer loopback (FLB) mode (Figure 3-1). This loopback is useful in testing and debugging applications. In FLB mode, the SCT loops data from the transmitter back to the receiver. When FLB is enabled, the following occurs:

1) Data is transmitted as normal at TTIP and TRING.
2) The RCLK output is replaced with the TCLK input.

Register Name: **CCR2**
Register Description: **Common Control Register 2**
Register Address: **13 Hex**

Bit #	7	6	5	4	3	2	1	0
Name	ECUS	VCRFS	AAIS	ARA	RSERC	LOTCMC	RCLA	TCSS

NAME	BIT	FUNCTION
ECUS	7	**Error Counter Update Select.** See Section 10 for details. 0 = update error counters once a second 1 = update error counters every 62.5ms (500 frames)
VCRFS	6	**VCR Function Select.** See Section 10 for details. 0 = count bipolar violations (BPVs) 1 = count code violations (CVs)
AAIS	5	**Automatic AIS Generation** 0 = disabled 1 = enabled
ARA	4	**Automatic Remote Alarm Generation** 0 = disabled 1 = enabled
RSERC	3	**RSER Control** 0 = allow RSER to output data as received under all conditions 1 = force RSER to 1 under loss-of-frame alignment conditions
LOTCMC	2	**Loss-of-Transmit Clock Mux Control.** Determines whether the transmit formatter should switch to the ever present RCLK if the TCLK should fail to transition. 0 = do not switch to RCLK if TCLK stops 1 = switch to RCLK if TCLK stops
RCLA	1	**Receive Carrier Loss (RCL) Alternate Criteria** 0 = RCL declared upon 255 consecutive 0s (125µs) 1 = RCL declared upon 2048 consecutive 0s (1ms)
TCSS	0	**Transmit Clock Source Select.** This function allows the user to internally select RCLK as the clock source for the transmit formatter. 0 = source of transmit clock is determined by CCR2.2 (LOTCMC) 1 = forces transmitter to internally switch to RCLK as source of transmit clock; signal at TCLK pin is ignored

8.3 Automatic Alarm Generation

The device can be programmed to automatically transmit AIS or remote alarm. When automatic AIS generation is enabled (CCR2.5 = 1), the device monitors the receive framer to determine if any of the following conditions are present: loss-of-receive frame synchronization, AIS alarm (all ones) reception, or loss-of-receive carrier (or signal). If one (or more) of these conditions is present, the framer forces an AIS alarm.

When automatic RAI generation is enabled (CCR2.4 = 1), the receiver is monitored to determine if any of the following conditions are present: loss-of-receive frame synchronization, AIS alarm (all ones) reception, or loss-of-receive carrier (or signal), or if CRC4 multiframe synchronization cannot be found within 128ms of FAS synchronization (if CRC4 is enabled). If one (or more) of these conditions is present, the device transmits an RAI alarm. RAI generation conforms to ETS 300 011 specifications, and a constant remote alarm is transmitted if the DS21Q58 cannot find CRC4 multiframe synchronization within 400ms as per G.706.

Register Name: **CCR3**
Register Description: **Common Control Register**
Register Address: **14 Hex**

Bit #	7	6	5	4	3	2	1	0
Name	RLB	LLB	LIAIS	TCM4	TCM3	TCM2	TCM1	TCM0

NAME	BIT	FUNCTION
RLB	7	**Remote Loopback.** See Section 8.4 for details. 0 = loopback disabled 1 = loopback enabled
LLB	6	**Local Loopback.** See Section 8.5 for details. 0 = loopback disabled 1 = loopback enabled
LIAIS	5	**Line Interface AIS-Generation Enable** 0 = allow normal data to be transmitted at TTIP and TRING 1 = force unframed all ones to be transmitted at TTIP and TRING at the MCLK rate
TCM4	4	**Transmit Channel Monitor Bit 4**. MSB of a channel decode that determines which transmit channel data appears in the TDS0M register. See Section 10 or details.
TCM3	3	**Transmit Channel Monitor Bit 3**
TCM2	2	**Transmit Channel Monitor Bit 2**
TCM1	1	**Transmit Channel Monitor Bit 1**
TCM0	0	**Transmit Channel Monitor Bit 0.** LSB of the channel decode.

8.4 Remote Loopback

When CCR4.7 is set to 1, the DS21Q58 is forced into remote loopback (RLB) mode. In this loopback, data input through the RPOSI and RNEGI pins is transmitted back to the TPOSO and TNEGO pins. Data continues to pass through the DS21Q58's receive framer as it would normally and the data from the transmit formatter is ignored (Figure 3-1).

8.5 Local Loopback

When CCR4.6 is set to 1, the DS21Q58 is forced into local loopback (LLB) mode. In this loopback, data continues to be transmitted as normal. Data being received at RTIP and RRING is replaced with the data being transmitted. Data in this loopback passes through the jitter attenuator (Figure 3-1).

Register Name: **CCR4**
Register Description: **Common Control Register 4**
Register Address: **15 Hex**

Bit #	7	6	5	4	3	2	1	0
Name	LIRST	RESA	RESR	RCM4	RCM3	RCM2	RCM1	RCM0

NAME	BIT	FUNCTION
LIRST	7	**Line Interface Reset.** Setting this bit from 0 to 1 initiates an internal reset that affects the clock recovery state machine and jitter attenuator. Normally this bit is only toggled on power-up. It must be cleared and set again for a subsequent reset.
RESA	6	**Receive Elastic Store Align.** Setting this bit from 0 to 1 may force the receive elastic store's write/read pointers to a minimum separation of half a frame. No action is taken if the pointer separation is already greater than or equal to half a frame. If pointer separation is less than half a frame, the command is executed and data is disrupted. This bit should be toggled after SYSCLK has been applied and is stable. It must be cleared and set again for a subsequent align. See Section 18 for details.
RESR	5	**Receive Elastic Store Reset.** Setting this bit from 0 to 1 forces the receive elastic store to a depth of one frame. Receive data is lost during the reset. The bit should be toggled after SYSCLK has been applied and is stable. It must be cleared and set again for a subsequent reset. See Section 18 for details.
RCM4	4	**Receive Channel Monitor Bit 4.** MSB of a channel decode that determines which receive channel data appears in the RDS0M register. See Section 10 for details.
RCM3	3	**Receive Channel Monitor Bit 3**
RCM2	2	**Receive Channel Monitor Bit 2**
RCM1	1	**Receive Channel Monitor Bit 1**
RCM0	0	**Receive Channel Monitor Bit 0.** LSB of the channel decode.

Register Name: **CCR5**
Register Description: **Common Control Register 5**
Register Address: **16 Hex**

Bit #	7	6	5	4	3	2	1	0
Name	LIUODO	CDIG	LIUSI	IRTSEL	TPRBS1	TPRBS0	RPRBS1	RPRBS0

NAME	BIT	FUNCTION
LIUODO	7	**Line Interface Open-Drain Option.** This control bit determines whether or not the TTIP and TRING outputs are open drain. The line driver outputs can be forced open drain to allow $6V_{PEAK}$ pulses to be generated or to allow the creation of a very low power interface. 0 = allow TTIP and TRING to operate normally 1 = force the TTIP and TRING outputs to be open drain
CDIG	6	**Customer Disconnect Indication Generator.** This control bit determines whether the line interface generates an unframed ...1010... pattern at TTIP and TRING instead of the normal data pattern. 0 = generate normal data at TTIP and TRING 1 = generate a ...1010... pattern at TTIP and TRING
LIUSI	5	**Line Interface G.703 Synchronization Interface Enable.** This control bit works with CCR7.0 to select G.703 functionality on the transmitter and receiver (Table 8-2). These bits determine whether the line receiver and transmitter should receive/transmit a normal E1 signal (Section 6 of G.703) or a 2.048MHz synchronization signal (Section 10 of G.703).
IRTSEL	4	**Receive Termination Select.** This function applies internal parallel resistance to the normal 120Ω external termination to create a 75Ω termination. 0 = normal 120Ω external termination 1 = internally adjust receive termination to 75Ω
TPRBS1	3	**Transmit PRBS Mode Bit 1**
TPRBS0	2	**Transmit PRBS Mode Bit 0**
RPRBS1	1	**Receive PRBS Mode Bit 1**
RPRBS0	0	**Receive PRBS Mode Bit 0**

Table 8-2. G.703 Function

LIUSI (CCR5.5)	TG703 (CCR7.0)	FUNCTION
0	0	Transmit and receive function normally
0	1	Transmit G.703 signal, receiver functions normally
1	0	Transmit and receive G.703 signal
1	1	Receive G.703, transmitter functions normally

Register Name: **CCR6**
Register Description: **Common Control Register 6**
Register Address: **2F Hex**

Bit #	7	6	5	4	3	2	1	0
Name	OTM1	OTM0	SRAS	LTC/SC	T16S	—	—	RESET

NAME	BIT	FUNCTION
OTM1	7	**Output Test Mode 1** (Table 8-3)
OTM0	6	**Output Test Mode 0** (Table 8-3)
SRAS	5	**Signaling Read Access Select.** This bit controls the function of registers SA1 through SA16 when reading. 0 = reading SA1–SA16 accesses receive signaling data 1 = reading SA1–SA16 accesses transmit signaling data
LTC/SC	4	**Loss-of-Transmit Clock/Signaling Change-of-State Select.** This bit determines how the status register bit at SR2.2 operates. 0 = SR2.2 indicates loss-of-transmit clock 1 = SR2.2 indicates signaling data has changed states since the last multiframe
T16S	3	**Time Slot 16 Select**. Transmit signaling insertion enable. 0 = signaling is not inserted into the transmit path from SA1–SA16 1 = signaling is inserted into the transmit path from SA1–SA16
—	2	**Unused.** Should be set = 0 for proper operation.
—	1	**Unused.** Should be set = 0 for proper operation.
RESET	0	**Reset**. A low-to-high transition of this bit resets all register bits to 0.

Table 8-3. Output Modes

OTM1	OTM0	OUTPUTS
0	0	Normal Operation
0	1	Outputs in Tri-State
1	0	Outputs Low
1	1	Outputs High

Register Name: **CCR7**
Register Description: **Common Control Register 7**
Register Address: **1F Hex**

Bit:	7	6	5	4	3	2	1	0
Name:	—	MM2	MM1	MM0	136S	ALB	—	TG703

NAME	BIT	FUNCTION
—	7	**Unused.** Should be set = 0 for proper operation.
MM2	6	**Monitor Mode 2.** Sets the internal linear gain boost (dB) for monitor mode applications. Please refer to the table below for proper settings.
MM1	5	**Monitor Mode 1.** Sets the internal linear gain boost (dB) for monitor mode applications. Please refer to the table below for proper settings.
MM0	4	**Monitor Mode 0.** Sets the internal linear gain boost (dB) for monitor mode applications. Please refer to the table below for proper settings.
136S	3	**1:1.36 Transformer Select** 0 = 1:2 transmit transformer 1 = 1:1.36 or 1:1.6 transmit transformer (see table below for details)
ALB	2	**Analog Loopback.** Setting this bit internally connects TTIP and TRING to RTIP and RRING. The external signal at the RTIP and RRING pins is ignored.
—	1	**Unused.** Should be set = 0 for proper operation.
TG703	0	**Transmit G.703.** This control bit works with CCR5.5 to select G.703 functionality on the transmitter and receiver (Table 8-2). These bits determine whether the line receiver and transmitter should receive/ transmit a normal E1 signal (Section 6 of G.703) or a 2.048MHz synchronization signal (Section 10 of G.703).

136S	L2	L1	L0	APPLICATION	TRANSFORMER 1:1.6	TRANSFORMER 1:1.36
1	0	0	0	75Ω	Rt = 0Ω	N.M.
1	0	0	1	120Ω	Rt = 0Ω	N.M.
1	0	1	0	75Ω	Rt = 2.7Ω	Rt = 0Ω
1	0	1	1	120Ω	Rt = 3.3Ω	Rt = 0Ω
1	1	0	0	N.M.	N.M.	N.M.
1	1	0	1	N.M.	N.M.	N.M.
1	1	1	0	N.M.	N.M.	N.M.
1	1	1	1	N.M.	N.M.	N.M.

N.M. = Not meaningful

MM2	MM1	MM0	INTERNAL LINEAR GAIN BOOST (dB)
0	0	0	Normal Operation (no boost)
0	0	1	Unused
0	1	0	Unused
0	1	1	Unused
1	0	0	Unused
1	0	1	Unused
1	1	0	Unused
1	1	1	30 dB

9. STATUS AND INFORMATION REGISTERS

The DS21Q58 has a set of four registers that contain information about a framer's real-time status. The registers include status register 1 (SR1), status register 2 (SR2), receive information register (RIR), and synchronizer status register (SSR).

When a particular event has occurred (or is occurring), the appropriate bit in one of these four registers is set to 1. All the bits in the SR1, SR2, and RIR1 registers operate in a latched fashion. The SSR contents are not latched, which means that if an event or an alarm occurs and a bit is set to 1 in any of the registers, the bit remains set until the user reads that bit. The bit is cleared when it is read and is not set again until the event has occurred again (or, in the case of the RUA1, RRA, RCL, and RLOS alarms, the bit remains set if the alarm is still present).

The user always precedes a read of the SR1, SR2, and RIR registers with a write. The byte written to the register informs the framer which bits the user wishes to read and have cleared. The user writes a byte to one of these registers with a 1 in the bit positions he or she wishes to read and a 0 in the bit positions he or she does not wish to obtain the latest information on. When a 1 is written to a bit location, the read register updates with the latest information. When a 0 is written to a bit position, the read register does not update and the previous value is held. A write to the status and information registers is immediately followed by a read of the same register. The read result should be logically ANDed with the mask byte that was just written, and this value should be written back into the same register to ensure the bit clears. This second write step is necessary because the alarms and events in the status registers occur asynchronously in respect to their access through the parallel port. This write-read-write scheme allows an external microcontroller or microprocessor to individually poll certain bits without disturbing the other bits in the register. This operation is key in controlling the DS21Q58 with higher-order software languages.

The SSR register operates differently than the other three. It is a read-only register and reports the status of the synchronizer in real time. This register is not latched and it is not necessary to precede a read of this register with a write.

The SR1 and SR2 registers have the unique ability to initiate a hardware interrupt through the $\overline{\text{INT}}$ output pin. Each of the alarms and events in SR1 and SR2 can be either masked or unmasked from the interrupt pin through interrupt mask register 1 (IMR1) and interrupt mask register 2 (IMR2).

The interrupts caused by alarms in SR1 (RUA1, RRA, RCL, and RLOS) act differently than the interrupts caused by events in SR1 and SR2 (RSA1, RDMA, RSA0, RSLIP, RMF, TMF, SEC, TAF, LOTC, and RCMF). The alarm-caused interrupts force the $\overline{\text{INT}}$ pin low whenever the alarm changes state (i.e., the alarm goes active or inactive according to the set/clear criteria in Table 9-1). The $\overline{\text{INT}}$ pin is allowed to return high (if no other interrupts are present) when the user reads the alarm bit that caused the interrupt to occur, even if the alarm is still present.

The event-based interrupts force the $\overline{\text{INT}}$ pin low when the event occurs. The $\overline{\text{INT}}$ pin returns high () when the user reads the event bit that caused the interrupt to occur. Furthermore, some event-based interrupts occur continuously as long as the event is occurring (RSLIP, SEC, TMF, RMF, TAF, RAF, RCMF). Other event-based interrupts force the $\overline{\text{INT}}$ pin low only once when the event is first detected (LOTC, PRSBD, RDMA, RSA1, RSA0), that is, the PRBSD interrupt fires once when the receiver detects the PRBS pattern. If the receiver continues to receive the PRBS pattern, no more interrupts are fired. If the receiver then detects that PRBS is no longer being sent, it resets and, when it receives the PRBS pattern again, another interrupt is fired.

9.1 Interrupt Handling

The host can quickly determine which status registers in the four ports are causing an interrupt by reading one of the unused addresses such as 0Ch, 0Dh, or 0Eh in any port.

Bit #	7	6	5	4	3	2	1	0
Name	SR2P4	SR1P4	SR2P3	SR1P3	SR2P2	SR1P2	SR2P1	SR1P1

NAME	BIT	FUNCTION
SR2P4	7	**Status Register 2, Port 4.** A 1 in this bit position indicates that status register 2 in port 4 is asserting an interrupt.
SR1P4	6	**Status Register 1, Port 4.** A 1 in this bit position indicates that status register 1 in port 4 is asserting an interrupt.
SR2P3	5	**Status Register 2, Port 3.** A 1 in this bit position indicates that status register 2 in port 3 is asserting an interrupt.
SR1P3	4	**Status Register 1, Port 3.** A 1 in this bit position indicates that status register 1 in port 3 is asserting an interrupt.
SR2P2	3	**Status Register 2, Port 2.** A 1 in this bit position indicates that status register 2 in port 2 is asserting an interrupt.
SR1P2	2	**Status Register 1, Port 2.** A 1 in this bit position indicates that status register 1 in port 2 is asserting an interrupt.
SR2P1	1	**Status Register 2, Port 1.** A 1 in this bit position indicates that status register 2 in port 1 is asserting an interrupt.
SR1P1	0	**Status Register 1, Port 1.** A 1 in this bit position indicates that status register 1 in port 1 is asserting an interrupt.

Register Name: **RIR**
Register Description: **Receive Information Register**
Register Address: **08 Hex**

Bit #	7	6	5	4	3	2	1	0
Name	—	—	JALT	RESF	RESE	CRCRC	FASRC	CASRC

NAME	BIT	FUNCTION
—	7	**Unused**
—	6	**Unused**
JALT	5	**Jitter Attenuator Limit Trip**. Set when the jitter attenuator FIFO reaches to within 4 bits of its limit; useful for debugging jitter attenuation operation.
RESF	4	**Receive Elastic Store Full.** Set when the receive elastic store buffer fills and a frame is deleted.
RESE	3	**Receive Elastic Store Empty.** Set when the receive elastic store buffer empties and a frame is repeated.
CRCRC	2	**CRC Resync Criteria Met.** Set when 915/1000 codewords are received in error.
FASRC	1	**FAS Resync Criteria Met.** Set when three consecutive FAS words are received in error.
CASRC	0	**CAS Resync Criteria Met.** Set when two consecutive CAS MF alignment words are received in error.

Register Name: **SSR**
Register Description: **Synchronizer Status Register**
Register Address: **09 Hex**

Bit #	7	6	5	4	3	2	1	0
Name	CSC5	CSC4	CSC3	CSC2	CSC0	FASSA	CASSA	CRC4SA

NAME	BIT	FUNCTION
CSC5	7	**CRC4 Sync Counter Bit 5.** MSB of the 6-bit counter.
CSC4	6	**CRC4 Sync Counter Bit 4**
CSC3	5	**CRC4 Sync Counter Bit 3**
CSC2	4	**CRC4 Sync Counter Bit 2**
CSC0	3	**CRC4 Sync Counter Bit 0.** LSB of the 6-bit counter. Counter bit 1 is not accessible.
FASSA	2	**FAS Sync Active.** Set while the synchronizer is searching for alignment at the FAS level.
CASSA	1	**CAS MF Sync Active.** Set while the synchronizer is searching for the CAS MF alignment word.
CRC4SA	0	**CRC4 MF Sync Active.** Set while the synchronizer is searching for the CRC4 MF alignment word.

9.2 CRC4 Sync Counter

The CRC4 sync counter increments each time the 8ms CRC4 multiframe search times out. The counter is cleared when the framer has successfully obtained synchronization at the CRC4 level. The counter can also be cleared by disabling the CRC4 mode (CCR1.0 = 0). This counter is useful for determining the amount of time the framer has been searching for synchronization at the CRC4 level. ITU G.706 suggests that if synchronization at the CRC4 level cannot be obtained within 400ms, the search should be abandoned and proper action taken. The CRC4 sync counter rolls over.

Table 9-1. Alarm Criteria

ALARM	SET CRITERIA	CLEAR CRITERIA	ITU SPEC
RSA1 (Receive Signaling All Ones)	Over 16 consecutive frames (one full MF) time slot 16 contains less than three zeros	Over 16 consecutive frames (one full MF) time slot 16 contains three or more zeros	G.732 4.2
RSA0 (Receive Signaling All Zeros)	Over 16 consecutive frames (one full MF) time slot 16 contains all zeros	Over 16 consecutive frames (one full MF) time slot 16 contains at least a single one	G.732 5.2
RDMA (Receive Distant Multiframe Alarm)	Bit 6 in time slot 16 of frame 0 set to one for two consecutive MF	Bit 6 in time slot 16 of frame 0 set to zero for two consecutive MF	O.162 2.1.5
RUA1 (Receive Unframed All Ones)	Fewer than three zeros in two frames (512 bits)	More than two zeros in two frames (512 bits)	O.162 1.6.1.2
RRA (Receive Remote Alarm)	Bit 3 of nonalign frame set to one for three consecutive occasions	Bit 3 of nonalign frame set to zero for three consecutive occasions	O.162 2.1.4
RCL (Receive Carrier Loss)	255 (or 2048) consecutive zeros received	In 255-bit times at least 32 ones are received	G.775/ G.962

Register Name: **SR1**
Register Description: **Status Register 1**
Register Address: **0A Hex**

Bit #	7	6	5	4	3	2	1	0
Name	RSA1	RDMA	RSA0	RSLIP	RUA1	RRA	RCL	RLOS

NAME	BIT	FUNCTION
RSA1	7	**Receive Signaling All Ones.** Set when the contents of time slot 16 contains fewer than three zeros over 16 consecutive frames. This alarm is not disabled in the CCS signaling mode. Both RSA1 and RSA0 are set if a change in signaling is detected.
RDMA	6	**Receive Distant MF Alarm.** Set when bit 6 of time slot 16 in frame 0 has been set for two consecutive multiframes. This alarm is not disabled in the CCS signaling mode.
RSA0	5	**Receive Signaling All Zeros.** Set when over a full MF, time slot 16 contains all zeros. Both RSA1 and RSA0 are set if a change in signaling is detected.
RSLIP	4	**Receive Elastic Store Slip.** Set when the elastic store has either repeated or deleted a frame of data.
RUA1	3	**Receive Unframed All Ones.** Set when an unframed all-ones code is received at RTIP and RRING.
RRA	2	**Receive Remote Alarm.** Set when a remote alarm is received at RTIP and RRING.
RCL	1	**Receive Carrier Loss.** Set when 255 (or 2048 if CCR2.1 = 1) consecutive zeros have been detected at RTIP and RRING.
RLOS	0	**Receive Loss of Sync.** Set when the device is not synchronized to the receive E1 stream.

Register Name: **IMR1**
Register Description: **Interrupt Mask Register 1**
Register Address: **18 Hex**

Bit #	7	6	5	4	3	2	1	0
Name	RSA1	RDMA	RSA0	RSLIP	RUA1	RRA	RCL	RLOS

NAME	BIT	FUNCTION
RSA1	7	**Receive Signaling All Ones** 0 = interrupt masked 1 = interrupt enabled
RDMA	6	**Receive Distant MF Alarm** 0 = interrupt masked 1 = interrupt enabled
RSA0	5	**Receive Signaling All Zeros** 0 = interrupt masked 1 = interrupt enabled
RSLIP	4	**Receive Elastic Store Slip Occurrence** 0 = interrupt masked 1 = interrupt enabled
RUA1	3	**Receive Unframed All Ones** 0 = interrupt masked 1 = interrupt enabled
RRA	2	**Receive Remote Alarm** 0 = interrupt masked 1 = interrupt enabled
RCL	1	**Receive Carrier Loss** 0 = interrupt masked 1 = interrupt enabled
RLOS	0	**Receive Loss of Sync** 0 = interrupt masked 1 = interrupt enabled

Register Name: **SR2**
Register Description: **Status Register 2**
Register Address: **0B Hex**

Bit #	7	6	5	4	3	2	1	0
Name	RMF	RAF	TMF	SEC	TAF	LOTC	RCMF	PRBSD

NAME	BIT	FUNCTION
RMF	7	**Receive CAS Multiframe**. Set every 2ms (regardless if CAS signaling is enabled or not) on receive multiframe boundaries.
RAF	6	**Receive Align Frame.** Set every 250µs at the beginning of align frames. Used to alert the host that Si and Sa bits are available in the RAF and RNAF registers.
TMF	5	**Transmit Multiframe.** Set every 2ms (regardless if CRC4 is enabled) on transmit multiframe boundaries.
SEC	4	**One-Second Timer.** Set on increments of one second based on RCLK. If CCR2.7 = 1, this bit is set every 62.5ms instead of once a second.
TAF	3	**Transmit Align Frame.** Set every 250µs at the beginning of align frames. Used to alert the host that the TAF and TNAF registers need to be updated.
LOTC	2	**Loss-of-Transmit Clock.** Set when the TCLK pin has not transitioned for one channel time (or 3.9ms).
RCMF	1	**Receive CRC4 Multiframe.** Set on CRC4 multiframe boundaries; continues to be set every 2ms on an arbitrary boundary if CRC4 is disabled.
PRBSD	0	**Pseudorandom Bit-Sequence Detect.** When receive PRBS is enabled, this bit is set when the 2^{15} - 1 PRBS pattern is detected at RTIP and RRING. The PRBS pattern can be framed, unframed, or in a specific time slot.

Register Name: **IMR2**
Register Description: **Interrupt Mask Register 2**
Register Address: **19 Hex**

Bit #	7	6	5	4	3	2	1	0
Name	RMF	RAF	TMF	SEC	TAF	LOTC	RCMF	PRBSD

NAME	BIT	FUNCTION
RMF	7	**Receive CAS Multiframe** 0 = interrupt masked 1 = interrupt enabled
RAF	6	**Receive Align Frame** 0 = interrupt masked 1 = interrupt enabled
TMF	5	**Transmit Multiframe** 0 = interrupt masked 1 = interrupt enabled
SEC	4	**One-Second Timer** 0 = interrupt masked 1 = interrupt enabled
TAF	3	**Transmit Align Frame** 0 = interrupt masked 1 = interrupt enabled
LOTC	2	**Loss-of-Transmit Clock** 0 = interrupt masked 1 = interrupt enabled
RCMF	1	**Receive CRC4 Multiframe** 0 = interrupt masked 1 = interrupt enabled
PRBSD	0	**Pseudorandom Bit-Sequence Detect** 0 = interrupt masked 1 = interrupt enabled

10. ERROR COUNT REGISTERS

Each DS21Q58 transceiver contains a set of four counters that record bipolar (BPVs) or code violations (CVs), errors in the CRC4 SMF codewords, E bits as reported by the far end, and word errors in the FAS. The E-bit counter is reconfigured for counting errors in the PRBS pattern if receive PRBS is enabled. Each of these four counters is automatically updated on either one-second boundaries (CCR2.70 = 0) or every 62.5ms (CCR2.7 = 1) as determined by the timer in status register 2 (SR2.4). Hence, these registers contain performance data from either the previous second or the previous 62.5ms. The user can use the interrupt from the one-second timer to determine when to read these registers. The user has a full second (or 62.5ms) to read the counters before the data is lost. The counters saturate at their respective maximum counts and do not roll over.

10.1 BPV or CV Counter

Violation count register 1 (VCR1) is the most significant word and VCR2 is the least significant word of a 16-bit counter that records either BPVs or CVs. If CCR2.6 = 0, the VCR counts BPVs. BPVs are defined as consecutive marks of the same polarity. In this mode, if the HDB3 mode is set for the receiver through CCR1.2, then HDB3 codewords are not counted as BPVs. If CCR2.6 = 1, the VCR counts CVs as defined in ITU O.161. CVs are defined as consecutive BPVs of the same polarity. In most applications, the framer should be programmed to count BPVs when receiving AMI code and to count CVs when receiving HDB3 code. This counter increments at all times and is not disabled by loss-of-sync conditions. The counter saturates at 65,535 and does not roll over. The bit-error rate on an E1 line would have to be greater than 10^{-2} before the VCR would saturate.

Register Name: **VCR1, VCR2**
Register Description: **Bipolar Violation Count Registers**
Register Address: **00 Hex, 01 Hex**

Bit #	7	6	5	4	3	2	1	0
Name	V15	V14	V13	V12	V11	V10	V9	V8
	V7	V6	V5	V4	V3	V2	V1	V0

NAME	BIT	FUNCTION
V15	VCR1.7	MSB of the 16-bit code violation count.
V0	VCR2.0	LSB of the 16-bit code violation count.

10.2 CRC4 Error Counter

CRC4 count register 1 (CRCCR1) is the most significant word and CRCCR2 is the least significant word of a 16-bit counter that records word errors in the cyclic redundancy check 4 (CRC4). Since the maximum CRC4 count in a one-second period is 1000, this counter cannot saturate. The counter is disabled during loss of sync at either the FAS or CRC4 level; it continues to count if loss-of-multiframe sync occurs at the CAS level. CRCCR1 and CRCCR2 have an alternate function.

Register Name: **CRCCR1, CRCCR2**
Register Description: **CRC4 Count Registers**
Register Address: **02 Hex, 03 Hex**

Bit #	7	6	5	4	3	2	1	0
Name	CRC15	CRC14	CRC13	CRC12	CRC11	CRC10	CRC9	CRC8
	CRC7	CRC6	CRC5	CRC4	CRC3	CRC2	CRC1	CRC0

NAME	BIT	FUNCTION
CRC15	CRCCR1.7	MSB of the 16-bit CRC4 error count.
CRC0	CRCCR2.0	LSB of the 16-bit CRC4 error count.

10.3 E-Bit/PRBS Bit-Error Counter

E-bit count register 1 (EBCR1) is the most significant word and EBCR2 is the least significant word of a 16-bit counter that records far-end block errors (FEBE) as reported in the first bit of frames 13 and 15 on E1 lines running with CRC4 multiframe. These error count registers increment once each time the received E-bit is set to 0. Since the maximum E-bit count in a one-second period is 1000, this counter cannot saturate. The counter is disabled during loss of sync at either the FAS or CRC4 level; it continues to count if loss-of-multiframe sync occurs at the CAS level.

Alternately, this counter counts bit errors in the received PRBS pattern when the receive PRBS function is enabled. In this mode, the counter is active when the receive PRBS detector can synchronize to the PRBS pattern. This pattern can be framed, unframed, or in any time slot. See Section 13 for more details.

Register Name: **EBCR1, EBCR2**
Register Description: **E-Bit Count Registers**
Register Address: **04 Hex, 05 Hex**

Bit #	7	6	5	4	3	2	1	0
Name	EB15	EB14	EB13	EB12	EB11	EB10	EB9	EB8
	EB7	EB6	EB5	EB4	EB3	EB2	EB1	EB0

NAME	BIT	FUNCTION
EB15	EBCR1.7	MSB of the 16-bit E-bit error count.
EB0	EBCR2.0	LSB of the 16-bit E-bit error count.

10.4 FAS Error Counter

FAS count register 1 (FASCR1) is the most significant word and FASCR2 is the least significant word of a 16-bit counter that records word errors in the FAS in time slot 0. This counter is disabled when RLOS is high. FAS errors are not counted when the framer is searching for FAS alignment and/or synchronization at either the CAS or CRC4 multiframe level. Since the maximum FAS word error count in a one-second period is 4000, this counter cannot saturate.

Register Name: **FASCR1, FASCR2**
Register Description: **FAS Error Count Registers**
Register Address: **06 Hex, 07 Hex**

Bit #	7	6	5	4	3	2	1	0
Name	FAS15	FAS14	FAS13	FAS12	FAS11	FAS10	FAS9	FAS8
	FAS7	FAS6	FAS5	FAS4	FAS3	FAS2	FAS1	FAS0

NAME	BIT	FUNCTION
FAS15	FASCR1.7	MSB of the 16-bit FAS error count.
FAS0	FASCR2.0	LSB of the 16-bit FAS error count.

11. SIGNALING OPERATION

Registers SA1 and SA16 are used to access the transmit and receive signaling function. Normally, reading these registers accesses the receive signaling data and writing these registers sources signaling data for the transmitter. The user can read what was written to the transmit signaling buffer by setting CCR6.5 = 1, then reading SA1–SA16. In most applications, however, CCR6.5 should be set = 0.

11.1 Receive Signaling

Signaling data is sampled from time slot 16 in the receive data stream and copied into the receive signaling buffers. The host can access the signaling data by reading SA1 through SA16. The signaling information in these registers is always updated on multiframe boundaries. The SR2.7 bit in status register 2 can be used to alert the host that new signaling data is present in the receive signaling buffers. The host has 2ms to read the signaling buffers before they are updated.

11.2 Transmit Signaling

Insertion of signaling data from the transmit signaling buffers is enabled by setting CCR6.3 = 1. Signaling data is loaded into the transmit signaling buffers by writing the signaling data to SA1–SA16. On multiframe boundaries, the contents of the transmit signaling buffer is loaded into a shift register for placement in the appropriate bit position in the outgoing data stream. The user can use the transmit multiframe interrupt in status register 2 (SR2.5) to know when to update the signaling bits. The host has 2ms to update the signaling data. The user only needs to update the signaling data that has changed since the last update.

11.3 CAS Operation

For CAS mode, the user must provide the CAS alignment pattern (four 0s in the upper nibble of TS16). Typically this is done by setting the upper four bits of SA1 = 0. The lower four bits are alarm bits. The user only needs to update the appropriate channel associated signaling data in SA2–SA16 on multiframe boundaries.

Register Name: **SA1 to SA16**
Register Description: **Signaling Registers**
Register Address: **30h to 3Fh**

(MSB)							**(LSB)**	
0	0	0	0	X	Y	X	X	SA1
CH1-A	CH1-B	CH1-C	CH1-D	CH16-A	CH16-B	CH16-C	CH16-D	SA2
CH2-A	CH2-B	CH2-C	CH2-D	CH17-A	CH17-B	CH17-C	CH17-D	SA3
CH3-A	CH3-B	CH3-C	CH3-D	CH18-A	CH18-B	CH18-C	CH18-D	SA4
CH4-A	CH4-B	CH4-C	CH4-D	CH19-A	CH19-B	CH19-C	CH19-D	SA5
CH5-A	CH5-B	CH5-C	CH5-D	CH20-A	CH20-B	CH20-C	CH20-D	SA6
CH6-A	CH6-B	CH6-C	CH6-D	CH21-A	CH21-B	CH21-C	CH21-D	SA7
CH7-A	CH7-B	CH7-C	CH7-D	CH22-A	CH22-B	CH22-C	CH22-D	SA8
CH8-A	CH8-B	CH8-C	CH8-D	CH23-A	CH23-B	CH23-C	CH23-D	SA9
CH9-A	CH9-B	CH9-C	CH9-D	CH24-A	CH24-B	CH24-C	CH24-D	SA10
CH10-A	CH10-B	CH10-C	CH10-D	CH25-A	CH25-B	CH25-C	CH25-D	SA11
CH11-A	CH11-B	CH11-C	CH11-D	CH26-A	CH26-B	CH26-C	CH26-D	SA12
CH12-A	CH12-B	CH12-C	CH12-D	CH27-A	CH27-B	CH27-C	CH27-D	SA13
CH13-A	CH13-B	CH13-C	CH13-D	CH28-A	CH28-B	CH28-C	CH28-D	SA14
CH14-A	CH14-B	CH14-C	CH14-D	CH29-A	CH29-B	CH29-C	CH29-D	SA15
CH15-A	CH15-B	CH15-C	CH15-D	CH30-A	CH30-B	CH30-C	CH30-D	SA16

12. DS0 MONITORING FUNCTION

Each DS21Q58 framer can monitor one DS0 (64kbps) channel in the transmit direction and one DS0 channel in the receive direction at the same time. In the transmit direction, the user determines which channel is to be monitored by properly setting the TCM0 to TCM4 bits in the CCR3 register. In the receive direction, the RCM0 to RCM4 bits in the CCR4 register need to be properly set. The DS0 channel pointed to by the TCM0 to TCM4 bits appear in the transmit DS0 monitor (TDS0M) register and the DS0 channel pointed to by the RCM0 to RCM4 bits appear in the receive DS0 (RDS0M) register. The TCM4 to TCM0 and RCM4 to RCM0 bits should be programmed with the decimal decode of the appropriate E1 channel. For example, if DS0 channel 6 in the transmit direction and DS0 channel 15 in the receive direction needed to be monitored, then the following values would be programmed into CCR4 and CCR5:

TCM4 = 0	RCM4 = 0
TCM3 = 0	RCM3 = 1
TCM2 = 1	RCM2 = 1
TCM1 = 0	RCM1 = 1
TCM0 = 1	RCM0 = 0

Register Name: **CCR3** (Repeated here from Section 6 for convenience.)
Register Description: **Common Control Register 3**
Register Address: **14 Hex**

Bit #	7	6	5	4	3	2	1	0
Name	RLB	LLB	LIAIS	TCM4	TCM3	TCM2	TCM1	TCM0

NAME	BIT	FUNCTION
RLB	7	**Remote Loopback**
LLB	6	**Local Loopback**
LIAIS	5	**Line Interface AIS Generation Enable**
TCM4	4	**Transmit Channel Monitor Bit 4**. MSB of a channel decode that determines which transmit channel data appears in the TDS0M register. See Section 10 or details.
TCM3	3	**Transmit Channel Monitor Bit 3**
TCM2	2	**Transmit Channel Monitor Bit 2**
TCM1	1	**Transmit Channel Monitor Bit 1**
TCM0	0	**Transmit Channel Monitor Bit 0.** LSB of the channel decode.

Register Name: **TDS0M**
Register Description: **Transmit DS0 Monitor Register**
Register Address: **22 Hex**

Bit #	7	6	5	4	3	2	1	0
Name	B1	B2	B3	B4	B5	B6	B7	B8

NAME	BIT	FUNCTION
B1	7	**Transmit DS0 Channel Bit 1.** MSB of the DS0 channel (first bit to be transmitted).
B2	6	**Transmit DS0 Channel Bit 2**
B3	5	**Transmit DS0 Channel Bit 3**
B4	4	**Transmit DS0 Channel Bit 4**
B5	3	**Transmit DS0 Channel Bit 5**
B6	2	**Transmit DS0 Channel Bit 6**
B7	1	**Transmit DS0 Channel Bit 7**
B8	0	**Transmit DS0 Channel Bit 8.** LSB of the DS0 channel (last bit to be transmitted).

Register Name: **CCR4** (Repeated here from Section 6 for convenience.)
Register Description: **Common Control Register 4**
Register Address: **15 Hex**

Bit #	7	6	5	4	3	2	1	0
Name	LIRST	RESA	RESR	RCM4	RCM3	RCM2	RCM1	RCM0

NAME	BIT	FUNCTION
LIRST	7	**Line Interface Reset**
RESA	6	**Receive Elastic Store Align**
RESR	5	**Receive Elastic Store Reset**
RCM4	4	**Receive Channel Monitor Bit 4.** MSB of a channel decode that determines which receive channel data appears in the RDS0M register. See Section 10 for details.
RCM3	3	**Receive Channel Monitor Bit 3**
RCM2	2	**Receive Channel Monitor Bit 2**
RCM1	1	**Receive Channel Monitor Bit 1**
RCM0	0	**Receive Channel Monitor Bit 0.** LSB of the channel decode.

Register Name: **RDS0M**
Register Description: **Receive DS0 Monitor Register**
Register Address: **2A Hex**

Bit #	7	6	5	4	3	2	1	0
Name	B1	B2	B3	B4	B5	B6	B7	B8

NAME	BIT	FUNCTION
B1	7	**Receive DS0 Channel Bit 1.** MSB of the DS0 channel (first bit received).
B2	6	**Receive DS0 Channel Bit 2**
B3	5	**Receive DS0 Channel Bit 3**
B4	4	**Receive DS0 Channel Bit 4**
B5	3	**Receive DS0 Channel Bit 5**
B6	2	**Receive DS0 Channel Bit 6**
B7	1	**Receive DS0 Channel Bit 7**
B8	0	**Receive DS0 Channel Bit 8.** LSB of the DS0 channel (last bit received).

13. PRBS GENERATION AND DETECTION

The DS21Q58 can transmit and receive the 2^{15} - 1 PRBS pattern. This PRBS pattern complies with ITU-T O.151 specifications. The PRBS pattern can be unframed (in all 256 bits of the frame), framed (in all time slots except TS0), or in any single time slot. Register CCR5 contains the control bits for configuring the transmit and receives PRBS functions. See Table 13-1 and Table 13-2 for selecting the transmit and receive modes of operation. In transmit and receive mode 1 operation, the transmit- and receive-channel monitor-select bits of registers CCR3 and CCR4 have an alternate use. When this mode is selected, these bits determine which time slot transmits and/or receives the PRBS pattern.

SR2.0 indicates when the receiver has synchronized to the PRBS pattern. The PRBS synchronizer remains in sync until it experiences six or more bit errors within a 64-bit span. Choosing any receive mode other than NORMAL causes the 16-bit E-bit error counter—EBCR1 and EBCR2—to be reconfigured for counting PRBS errors.

User-definable outputs OUTA or OUTB can be configured to output a pulse for every bit error received. See Section 20 and Table 20-1 for details. This signal can be used with external circuitry to keep track of bit-error rates during PRBS testing. Once synchronized, any bit errors received cause a positive-going pulse, synchronous with RCLK.

Table 13-1. Transmit PRBS Mode Select

TPRBS1 (CCR5.3)	TPBRS0 (CCR5.2)	MODE
0	0	**Mode 0:** Normal (PRBS disabled)
0	1	**Mode 1:** PRBS in TSx. PRBS pattern is transmitted in a single time slot (TS). In this mode, the transmit-channel monitor-select bits in register CCR3 are used to select a time slot in which to transmit the PRBS pattern.
1	0	**Mode 2:** PRBS in all but TS0. PRBS pattern is transmitted in time slots 1 through 31.
1	1	**Mode 3:** PRBS unframed. PRBS pattern is transmitted in all time slots.

Table 13-2. Receive PRBS Mode Select

RPRBS1 (CCR5.1)	RPBRS0 (CCR5.0)	MODE
0	0	**Mode 0:** Normal (PRBS disabled)
0	1	**Mode 1:** PRBS in TSx. PRBS pattern is received in a single time slot (TS). In this mode, the receive-channel monitor-select bits in register CCR4 are used to select a time slot in which to receive the PRBS pattern.
1	0	**Mode 2:** PRBS in all but TS0. PRBS pattern is received in time slots 1 through 31.
1	1	**Mode 3:** PRBS unframed. PRBS pattern is received in all time slots.

14. SYSTEM CLOCK INTERFACE

A single system clock interface (SCI) is common to all four DS21Q58 transceivers. The SCI is designed to allow any one of the four receivers to act as the master reference clock for the system. When multiple DS21Q58s are used to build an N port system, the SCI allows any one of the N ports to be the master. The selected reference is then distributed to the other DS21Q58s through the REFCLK pin. The REFCLK pin acts as an output on the DS21Q58, which has been selected to provide the reference clock from one of its four receivers. On DS21Q58s not selected to source the reference clock, this pin becomes an input by writing 0s to the SCSx bits. The reference clock is also passed to the clock synthesizer PLL to generate a 2.048MHz, 4.096MHz, 8.192MHz, or 16.384MHz clock. This clock can then be used with the IBO function to merge up to eight E1 lines onto a single high-speed PCM bus. In the event that the master E1 port fails (enters a receive carrier loss condition), that port automatically switches to the clock present on the MCLK pin. Therefore, MCLK acts as the backup source of master clock. The host can then find and select a functioning E1 port as the master. Because the selected port's clock is passed to the other DS21Q58s in a multiple device configuration, one DS21Q58's synthesizer can always be the source of the high-speed clock. This allows smooth transitions when clock-source switching occurs. The SCI control register exists in Transceiver 1 only (TS0, TS1 = 0).

Register Name: **SCICR**
Register Description: **System Clock Interface Control Register**
(Note: This register is valid only for Transceiver 1 (TS0 = 0, TS1 = 0).)
Register Address: **1D Hex**

Bit #	7	6	5	4	3	2	1	0
Name	AJACKE	BUCS	SOE	CSS1	CSS0	SCS2	SCS1	SCS0

NAME	BIT	FUNCTION
AJACKE	7	**AJACK Enable.** This bit enables the alternate jitter attenuator.
BUCS	6	**Backup Clock Select.** Selects which clock source to switch to automatically during a loss-of-transmit clock event. 0 = during an LOTC event switch to MCLK 1 = during an LOTC event switch to system reference clock
SOE	5	**Synthesizer Output Enable** 0 = 2/4/8/16MCK pin in high-Z mode 1 = 2/4/8/16MCK pin active
CSS1	4	**Clock Synthesizer Select Bit 1** (Table 14-1)
CSS0	3	**Clock Synthesizer Select Bit 0** (Table 14-1)
SCS2	2	**System Clock Select Bit 2** (Table 14-2)
SCS1	1	**System Clock Select Bit 1** (Table 14-2)
SCS0	0	**System Clock Select Bit 0** (Table 14-2)

Table 14-1. Synthesizer Output Select

CSS1	CSS0	SYNTHESIZER OUTPUT FREQUENCY (MHz)
0	0	2.048
0	1	4.096
1	0	8.192
1	1	16.384

Table 14-2. System Clock Selection

SCS2	SCS1	SCS0	PORT SELECTED AS MASTER
0	0	0	None (Master Port can be derived from another DS21Q58 in the system.)
0	0	1	Transceiver 1
0	1	0	Transceiver 2
0	1	1	Transceiver 3
1	0	0	Transceiver 4
1	0	1	Reserved for future use.
1	1	0	Reserved for future use.
1	1	1	Reserved for future use.

15. TRANSMIT CLOCK SOURCE

Depending on the DS21Q58's operating mode, the transmit clock can be derived from different sources. In a basic configuration, where the IBO function is disabled, the transmit clock is normally sourced from the TCLK pin. In this mode, a 2.048MHz clock with ±50ppm accuracy is applied to the TCLK pin. If the signal at TCLK is lost, the DS21Q58 automatically switches to either the system reference clock present on the REFCLK pin or to the recovered clock off the same port, depending on which source the host assigned as the backup clock. At the same time the host can be notified of the loss-of-transmit clock through an interrupt. The host can at any time force a switchover to one of the two backup clock sources regardless of the state of the TCLK pin.

When the IBO function is enabled, the transmit clock must be synchronous to the system clock since slips are not allowed in the transmit direction. In this mode, the TCLK pin is ignored, and a transmit clock is automatically provided by the IBO circuit by dividing the clock present on the SYSCLK pin by 2, 4, or 8. In this configuration, if the signal present on the SYSCLK pin is lost, the DS21Q58 automatically switches to either the system reference clock or to the recovered clock off the same port, depending on which source the host assigned as the backup clock. The host can at any time force a switchover to one of the two backup clock sources regardless of the state of the SYSCLK pin.

16. IDLE CODE INSERTION

The transmit idle registers (TIR1/2/3/4) determine which of the 32 E1 channels should be overwritten with the code placed in the transmit idle definition register (TIDR). This allows the same 8-bit code to be placed into any of the 32 E1 channels. Each of the bit positions in the transmit idle registers represents a DS0 channel in the outgoing frame. When these bits are set to 1, the corresponding channel transmits the idle code contained in the TIDR.

Register Name: **TIR1, TIR2, TIR3, TIR4**
Register Description: **Transmit Idle Registers**
Register Address: **24 Hex, 25 Hex, 26 Hex, 27 Hex**

Bit #	7	6	5	4	3	2	1	0
Name	CH8	CH7	CH6	CH5	CH4	CH3	CH2	CH1
	CH16	CH15	CH14	CH13	CH12	CH11	CH10	CH9
	CH24	CH23	CH22	CH21	CH20	CH19	CH18	CH17
	CH32	CH31	CH30	CH29	CH28	CH27	CH26	CH25

NAME	BIT	FUNCTION
CH1 to CH32	TIR1.0 to 4.7	**Transmit Idle Code-Insertion Control Bits** 0 = do not insert the idle code in the TIDR into this channel 1 = insert the idle code in the TIDR into this channel

Register Name: **TIDR**
Register Description: **Transmit Idle Definition Register**
Register Address: **23 Hex**

Bit #	7	6	5	4	3	2	1	0
Name	TIDR7	TIDR6	TIDR5	TIDR4	TIDR3	TIDR2	TIDR1	TIDR0

NAME	BIT	FUNCTION
TIDR7	7	**MSB of the Idle Code** (This bit is transmitted first.)
TIDR6	6	—
TIDR5	5	—
TIDR4	4	—
TIDR3	3	—
TIDR2	2	—
TIDR1	1	—
TIDR0	0	**LSB of the Idle Cod**e (This bit is transmitted last.)

17. PER-CHANNEL LOOPBACK

The DS21Q58 has per-channel loopback capability that can operate in one of two modes: remote per-channel loopback or local per-channel loopback. PCLB1/2/3/4 are used for both modes to determine which channels are looped back. In remote per-channel loopback mode, PCLB1/2/3/4 determine which channels (if any) in the transmit direction should be replaced with the data from the receiver or, in other words, off the E1 line. In local per-channel loopback mode, PCLB1/2/3/4 determine which channels (if any) in the receive direction should be replaced with the data from the transmit. If either mode is enabled, transmit and receive clocks and frame syncs must be synchronized. There are no restrictions on which channels can be looped back or on how many channels can be looped back.

Register Name: **PCLB1, PCLB2, PCLB3, PCLB4**
Register Description: **Per-Channel Loopback Registers**
Register Address: **2B Hex, 2C Hex, 2D Hex, 2E Hex**

Bit #	7	6	5	4	3	2	1	0
Name	CH8	CH7	CH6	CH5	CH4	CH3	CH2	CH1
	CH16	CH15	CH14	CH13	CH12	CH11	CH10	CH9
	CH24	CH23	CH22	CH21	CH20	CH19	CH18	CH17
	CH32	CH31	CH30	CH29	CH28	CH27	CH26	CH25

NAME	BIT	FUNCTION
CH1 to CH32	PCLB1.0 to 4.7	**Per-Channel Loopback Control Bits** 0 = do not loopback this channel 1 = loopback this channel

18. ELASTIC STORE OPERATION

The DS21Q58 contains a two-frame (512 bits) elastic store for the receive direction. The elastic store absorbs the differences in frequency and phase between the E1 data stream and an asynchronous (i.e., not frequency locked) backplane clock that can be 2.048MHz for normal operation or 4.096MHz, 8.192MHz, or 16.384MHz when using the IBO function. The elastic store contains full controlled slip capability.

If the receive elastic store is enabled (RCR.4 = 1), the user must provide a 2.048MHz clock to the SYSCLK pin. If the IBO function is enabled, a 4.096MHz, 8.192MHz, or 16.384MHz clock must be provided at the SYSCLK pin. The user has the option of either providing a frame/multiframe sync at the RSYNC pin (RCR.5 = 1) or having the RSYNC pin provide a pulse on frame/multiframe boundaries (RCR.5 = 0). If the user wishes to obtain pulses at the frame boundary, RCR1.6 must be set to 0; if the user wishes to have pulses occur at the multiframe boundary, RCR1.6 must be set to 1. If the elastic store is enabled, either CAS (RCR.7 = 0) or CRC4 (RCR.7 = 1) multiframe boundaries are indicated through the RSYNC output. See Section 24 for timing details. If the 512-bit elastic buffer either fills or empties, a controlled slip occurs. If the buffer empties, a full frame of data (256 bits) is repeated at RSER, and the SR1.4 and RIR.3 bits are set to 1. If the buffer fills, a full frame of data is deleted, and the SR1.4 and RIR.4 bits are set to 1.

19. ADDITIONAL (Sa) AND INTERNATIONAL (Si) BIT OPERATION

On the receiver, the RAF and RNAF registers always report the data as it is received in the additional (Sa) and international (Si) bit locations. The RAF and RNAF registers are updated with the setting of the receive align frame bit in status register 2 (SR2.6). The host can use the SR2.6 bit to know when to read the RAF and RNAF registers. It has 250µs to retrieve the data before it is lost.

On the transmitter, data is sampled from the TAF and TNAF registers with the setting of the transmit align frame bit in status register 2 (SR2.3). The host can use the SR2.3 bit to know when to update the TAF and TNAF registers. It has 250µs to update the data or else the old data is retransmitted. Data in the Si bit position is overwritten if either the framer is programmed (1) to source the Si bits from the TSER pin, (2) in the CRC4 mode, or if the framer (3) has automatic E-bit insertion enabled. Data in the Sa bit position is overwritten if any of the TCR.3–TCR.7 bits are set to 1. Please see the TCR register descriptions for more details.

Register Name: **RAF**
Register Description: **Receive Align Frame Register**
Register Address: **28 Hex**

Bit #	7	6	5	4	3	2	1	0
Name	Si	0	0	1	1	0	1	1

NAME	BIT	FUNCTION
Si	7	**International Bit**
0	6	**Frame Alignment Signal Bit**
0	5	**Frame Alignment Signal Bit**
1	4	**Frame Alignment Signal Bit**
1	3	**Frame Alignment Signal Bit**
0	2	**Frame Alignment Signal Bit**
1	1	**Frame Alignment Signal Bit**
1	0	**Frame Alignment Signal Bit**

Register Name: **RNAF**
Register Description: **Receive Nonalign Frame Register**
Register Address: **29 Hex**

Bit #	7	6	5	4	3	2	1	0
Name	Si	1	A	Sa4	Sa5	Sa6	Sa7	Sa8

NAME	BIT	FUNCTION
Si	7	**International Bit**
1	6	**Frame Nonalignment Signal Bit**
A	5	**Remote Alarm**
Sa4	4	**Additional Bit 4**
Sa5	3	**Additional Bit 5**
Sa6	2	**Additional Bit 6**
Sa7	1	**Additional Bit 7**
Sa8	0	**Additional Bit 8**

Register Name: **TAF**
Register Description: **Transmit Align Frame Register**
Register Address: **20 Hex**

Bit #	7	6	5	4	3	2	1	0
Name	Si	0	0	1	1	0	1	1

Note: *This register must be programmed with the 7-bit FAS word. The DS21Q58 does not automatically set these bits.*

NAME	BIT	FUNCTION
Si	7	**International Bit**
0	6	**Frame Alignment Signal Bit.** Set this bit = 0.
0	5	**Frame Alignment Signal Bit.** Set this bit = 0.
1	4	**Frame Alignment Signal Bit.** Set this bit = 1.
1	3	**Frame Alignment Signal Bit.** Set this bit = 1.
0	2	**Frame Alignment Signal Bit.** Set this bit = 0.
1	1	**Frame Alignment Signal Bit.** Set this bit = 1.
1	0	**Frame Alignment Signal Bit.** Set this bit = 1.

Register Name: **TNAF**
Register Description: **Transmit Nonalign Frame Register**
Register Address: **21 Hex**

Bit #	7	6	5	4	3	2	1	0
Name	Si	1	A	Sa4	Sa5	Sa6	Sa7	Sa8

Note: *Bit 6 must be programmed to 1. The DS21Q58 does not automatically set this bit.*

NAME	BIT	FUNCTION
Si	7	**International Bit**
1	6	**Frame Nonalignment Signal Bit.** Set this bit = 1.
A	5	**Remote Alarm (Used to transmit the alarm.)**
Sa4	4	**Additional Bit 4**
Sa5	3	**Additional Bit 5**
Sa6	2	**Additional Bit 6**
Sa7	1	**Additional Bit 7**
Sa8	0	**Additional Bit 8**

20. USER-CONFIGURABLE OUTPUTS

There are two user-configurable output pins for each transceiver, OUTA and OUTB. These pins can be programmed to output various clocks, alarms for line monitoring, or logic 0 and 1 levels to control external circuitry. They can also be used to access transmit data between the framer and transmit LIU. OUTA and OUTB can be active low or active high when operating as clock and alarm outputs. OUTA is active high if OUTAC.4 = 1 and active low if OUTAC.3 = 0. OUTB is active high if OUTBC.4 = 1 and active low if OUTBC.4 = 0 (Table 20-1). Select mode 0000 to control external circuitry. In this configuration, the OUTA pin follows OUTAC.4 and the OUTB pin follows OUTBC.4. The OUTAC register also contains a control bit for CMI operation. See Section 22 for details about CMI operation.

Register Name: **OUTAC**
Register Description: **OUTA Control Register**
Register Address: **1A Hex**

Bit #	7	6	5	4	3	2	1	0
Name	TTLIE	CMII	CMIE	OA4	OA3	OA2	OA1	OA0

NAME	BIT	FUNCTION
TTLIE	7	**TTL Input Enable.** When this bit is set, the receiver can accept TTL positive and negative data at the RTIP and RRING inputs. The data is clocked in on the falling edge of MCLK.
CMII	6	**CMI Invert.** See Section 22 for details. 0 = CMI input data not inverted 1 = CMI input data inverted
CMIE	5	**CMI Enable.** See Section 22 for details. 0 = CMI disabled 1 = CMI enabled
OA4	4	**OUTA Control Bit 4.** Inverts OUTA output.
OA3	3	**OUTA Control Bit 3.** See Table 20-1 for details.
OA2	2	**OUTA Control Bit 2.** See Table 20-1 for details.
OA1	1	**OUTA Control Bit 1.** See Table 20-1 for details.
OA0	0	**OUTA Control Bit 0.** See Table 20-1 for details.

Register Name: **OUTBC**
Register Description: **OUTB Control Register**
Register Address: **1B Hex**

Bit #	7	6	5	4	3	2	1	0
Name	NRZE	—	—	OB4	OB3	OB2	OB1	OB0

NAME	BIT	FUNCTION
NRZE	7	**NRZ Enable.** When this bit is set, the receiver can accept TTL-type NRZ data at the RTIP input. RRING becomes a clock input. 0 = RTIP and RRING are in normal mode. 1 = RTIP becomes an NRZ TTL-type input and RRING is its associated clock input. Data at RTIP is clocked in on the falling edge of the clock present on RRING.
—	6	**Unused.** Should be set = 0 for proper operation.
—	5	**Unused.** Should be set = 0 for proper operation.
OB4	4	**OUTB Control Bit 4.** Inverts OUTB output.
OB3	3	**OUTB Control Bit 3**
OB2	2	**OUTB Control Bit 2**
OB1	1	**OUTB Control Bit 1**
OB0	0	**OUTB Control Bit 0**

Table 20-1. OUTA and OUTB Function Select

OA3 OB3	OA2 OB2	OA1 OB1	OA0 OB0	FUNCTION
0	0	0	0	**External Hardware Control Bit**. In this mode, OUTA and OUTB can be used as simple control pins for external circuitry. Use OA4 and OB4 to toggle OUTA and OUTB.
0	0	0	1	**RCLK**. Receive recovered clock.
0	0	1	0	**Receive Loss-of-Sync Indicator**. Real-time hardware version of SR1.0 (Table 9-1).
0	0	1	1	**Receive Loss-of-Carrier Indicator**. Real-time hardware version of SR1.1 (Table 9-1).
0	1	0	0	**Receive Remote Alarm Indicator**. Real-time hardware version of SR1.2 (Table 9-1).
0	1	0	1	**Receive Unframed All-Ones Indicator.** Real-time hardware version of SR1.3 (Table 9-1).
0	1	1	0	**Receive Slip-Occurrence Indicator**. One-clock-wide pulse for every slip of the receive elastic store. Hardware version of SR1.4.
0	1	1	1	**Receive CRC Error Indicator**. One-clock-wide pulse for every multiframe that contains a CRC error. Output forced to 0 during loss of sync.
1	0	0	0	**Loss-of-Transmit Clock Indicator**. Real-time hardware version SR2.2 (Table 9-1).
1	0	0	1	**RFSYNC**. Recovered frame-sync pulse.
1	0	1	0	**PRBS Bit Error**. A half-clock-wide pulse for every bit error in the received PRBS pattern.
1	0	1	1	**TDATA/RDATA**. OUTB outputs an NRZ version of the transmit data stream (TDATA) prior to the transmit line interface. OUTA outputs the received serial data stream (RDATA) prior to the elastic store.
1	1	0	0	**Receive CRC4 Multiframe Sync**. Recovered CRC4 MF sync pulse.
1	1	0	1	**Receive CAS Multiframe Sync**. Recovered CAS MF sync pulse.
1	1	1	0	**Transmit Current Limit**. Real-time indicator that the TTIP and TRING outputs have reached their 50mA current limit.
1	1	1	1	**TPOS/TNEG Output**. This mode outputs the AMI/HDB3 encoded transmit data. OUTA outputs TNEG data. OUTB outputs TPOS data.

21. LINE INTERFACE UNIT

The line interface unit contains three sections: the receiver, which handles clock and data recovery; the transmitter, which waveshapes and drives the E1 line; and the jitter attenuator. The line interface control register (LICR), described below, controls each of these three sections.

Register Name: **LICR**
Register Description: **Line Interface Control Register**
Register Address: **17 Hex**

Bit #	7	6	5	4	3	2	1	0
Name	L2	L1	L0	—	JAS	JABDS	DJA	TPD

NAME	BIT	FUNCTION
L2	7	**Line Build-Out Select Bit 2.** Sets the transmitter build-out.
L1	6	**Line Build-Out Select Bit 1.** Sets the transmitter build-out.
L0	5	**Line Build-Out Select Bit 0.** Sets the transmitter build-out.
—	4	**Unused.** Should be set = 0 for proper operation.
JAS	3	**Jitter Attenuator Select** 0 = place the jitter attenuator on the receive side 1 = place the jitter attenuator on the transmit side
JABDS	2	**Jitter Attenuator Buffer Depth Select** 0 = 128 bits 1 = 32 bits (use for delay-sensitive applications)
DJA	1	**Disable Jitter Attenuator** 0 = jitter attenuator enabled 1 = jitter attenuator disabled
TPD	0	**Transmit Power-Down** 0 = powers down the transmitter and tri-states the TTIP and TRING pins 1 = normal transmitter operation

21.1 Receive Clock and Data Recovery

The DS21Q58 contains a digital clock recovery system. (See Figure 3-1 and Figure 21-2 for more details.) The device couples to the receive E1 shielded twisted pair or coax through a 1:1 transformer (Table 21-3). The 2.048MHz clock attached at the MCLK pin is internally multiplied by 16 through an internal PLL and fed to the clock recovery system. The clock recovery system uses the clock from the PLL circuit to form a 16 times oversampler, which is used to recover the clock and data. This oversampling technique offers outstanding jitter tolerance (Figure 21-5).

Normally, RCLK is the recovered clock from the E1 AMI/HDB3 waveform presented at the RTIP and RRING inputs. When no AMI signal is present at RTIP and RRING, an RCL condition occurs and the RCLK is sourced from the clock applied at the MCLK pin. If the jitter attenuator is either placed in the transmit path or is disabled, RCLK can exhibit slightly shorter high cycles of the clock. This is because of the highly oversampled digital clock recovery circuitry. If the jitter attenuator is placed in the receive path (as is the case in most applications), the jitter attenuator restores the RCLK to being close to 50% duty cycle. See *Receive AC Characteristics* in Section 26.4 for more details.

21.1.1 Termination

The DS21Q58 is designed to be fully software-selectable for 75Ω and 120Ω termination without the need to change any external resistors. The user can configure the DS21Q58 for 75Ω or 120Ω receive termination by setting the IRTSEL (CCR5.4) bit. When using the internal termination feature, the external termination resistance should be 120Ω (typically two 60Ω resistors). Setting IRTSEL = 1 causes the DS21Q58 to internally apply parallel resistance to the external resistors to adjust the termination to 75Ω (Figure 21-3).

21.2 Receive Monitor Mode

When connecting to a monitor port, a large resistive loss is incurred due to the voltage divider between the E1 line termination resistors (Rt) and the monitor port isolation resistors (Rm) as shown in Figure 21-1. The four receivers of the DS21Q58 can provide gain to overcome the resistive loss of a monitor connection. This is typically a purely resistive loss/gain and should not be confused with the cable loss characteristics of an E1 transmission line. By setting the CCR7 register as shown in Table 21-1, the receiver can be programmed to provide 30dB of gain.

Figure 21-1. Typical Monitor Port Application

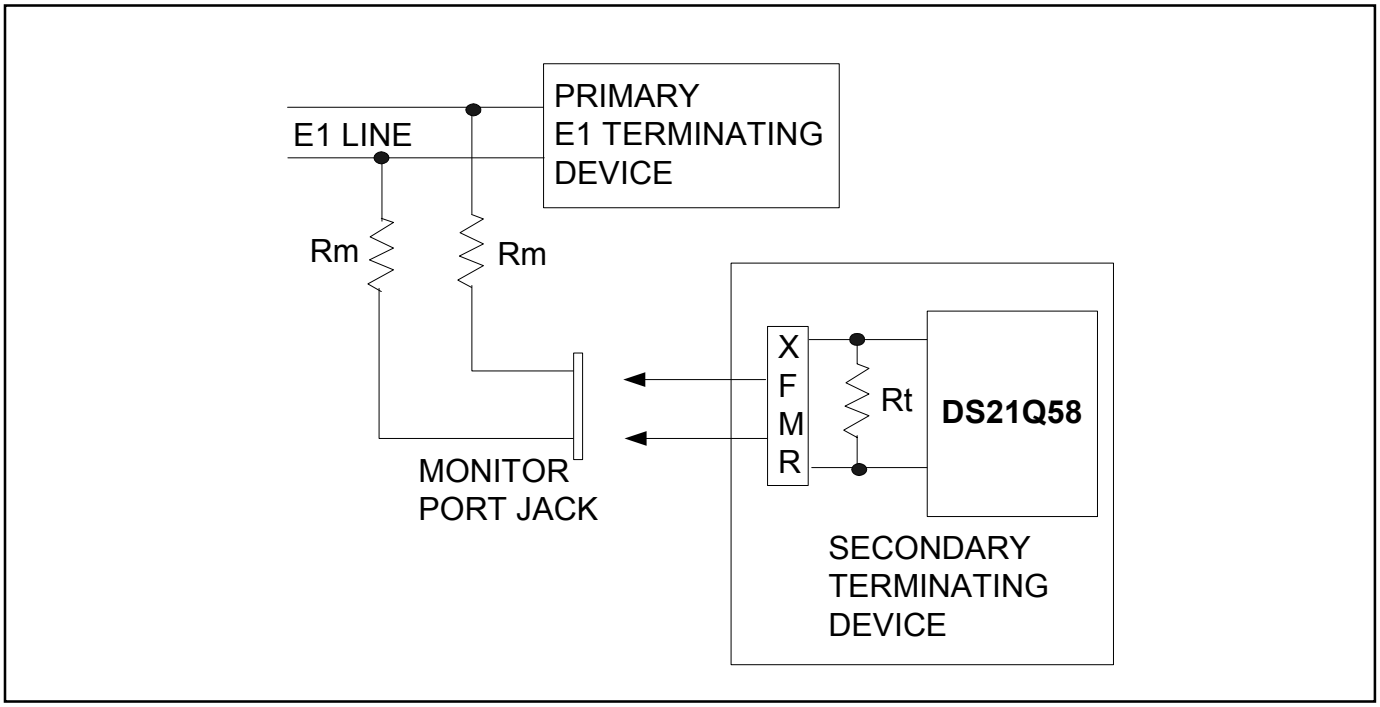

Table 21-1. Receive Monitor Mode Gain

CCR7 (ADDRESS = 1Fh) REGISTER VALUE	GAIN (dB)
7Xh	30
0Xh	0

21.3 Transmit Waveshaping and Line Driving

The DS21Q58 uses a set of laser-trimmed delay lines and a precision digital-to-analog converter (DAC) to create the waveforms that are transmitted onto the E1 line. The waveforms meet the ITU G.703 specifications (Figure 21-4). The user selects which waveform is to be generated by properly programming the L2/L1/L0 bits in the line interface control register (LICR). The DS21Q58 can be set up in a number of various configurations depending on the application (Table 21-2).

Table 21-2. Line Build-Out Select in LICR

L2	L1	L0	APPLICATION	TRANSFORMER	RETURN LOSS*	Rt (Ω)**
0	0	0	75Ω normal	1:2 step-up	N.M.	0
0	0	1	120Ω normal	1:2 step-up	N.M.	0
0	1	0	75Ω with protection resistors	1:2 step-up	N.M.	2.5
0	1	1	120Ω with protection resistors	1:2 step-up	N.M.	2.5
1	0	0	75Ω with high return loss	1:2 step-up	21dB	6.2
1	0	1	120Ω with high return loss	1:2 step-up	21dB	11.6

**N.M. = Not meaningful (return loss value too low for significance)*
***Refer to* Application Note 336: Transparent Operation on T1, E1 Framers and Transceivers *for details on E1 line interface design.*

Because of the nature of the transmitter's design, very little jitter (less than $0.005UI_{P-P}$ broadband from 10Hz to 100kHz) is added to the jitter present on TCLK (or source used for transmit clock). Also, the waveform created is independent of the duty cycle of TCLK. The device's transmitter couples to the E1-transmit shielded twisted pair or coax through a 1:2 step-up transformer, as shown in Figure 21-2. For the devices to create the proper waveforms, the transformer used must meet the specifications listed in Table 21-3. The line driver in the device contains a current limiter that prevents more than 50mA (RMS) from being sourced in a 1Ω load.

Table 21-3. Transformer Specifications

SPECIFICATION	RECOMMENDED VALUE
Turns Ratio	1:1 (receive) and 1:2 (transmit) ±3%
Primary Inductance	600µH minimum
Leakage Inductance	1.0µH maximum
Intertwining Capacitance	40pF maximum
DC Resistance	1.2Ω maximum

Figure 21-2. External Analog Connections (Basic Configuration)

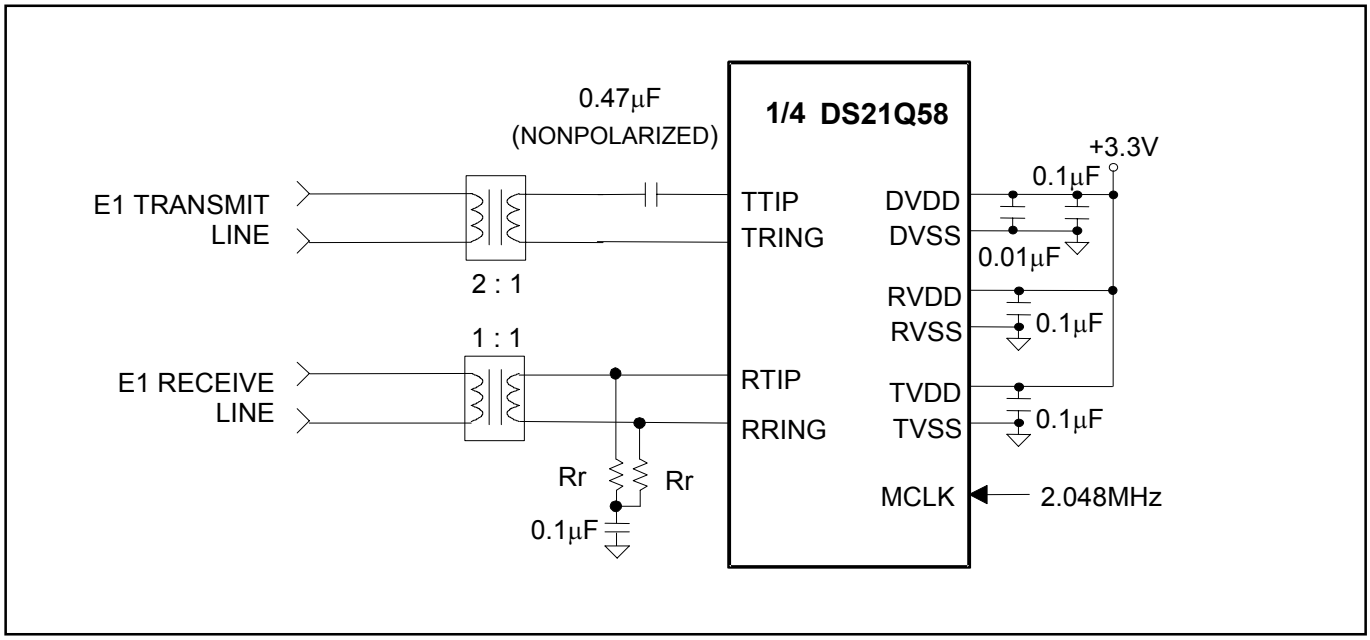

Figure 21-3. External Analog Connections (Protected Interface)

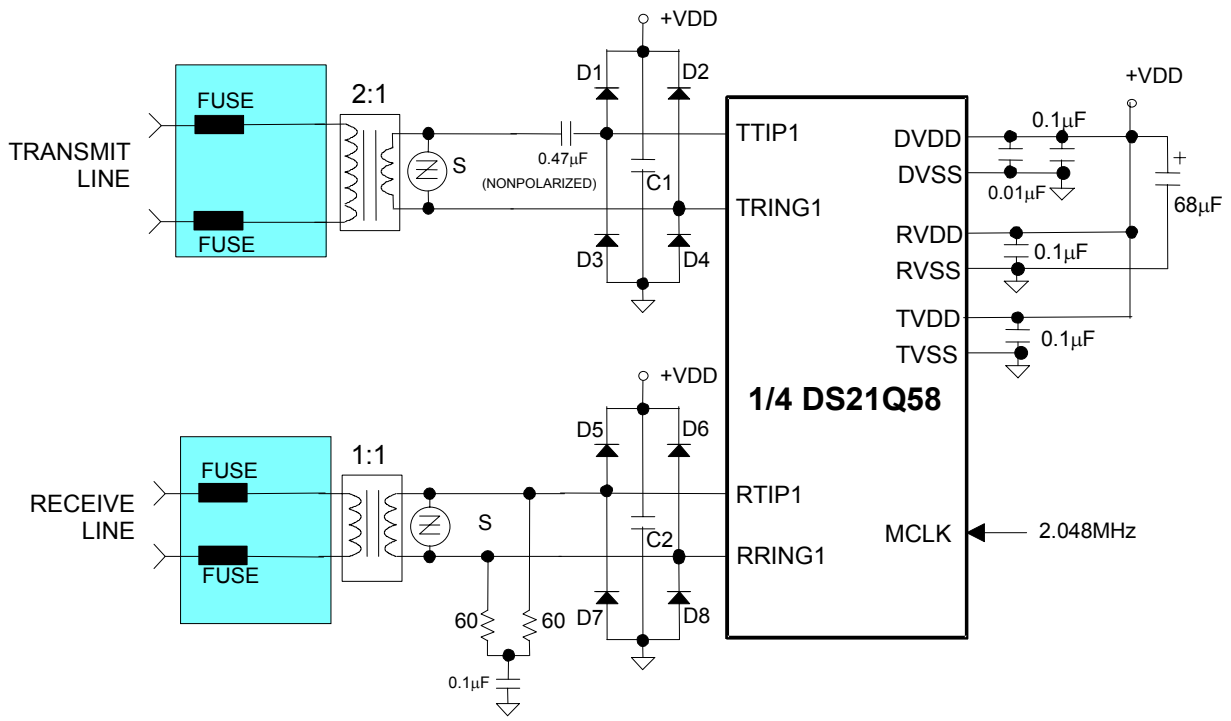

NOTE 1: ALL RESISTOR VALUES ARE ±1%.
NOTE 2: C1 = C2 = 0.1µF.
NOTE 3: S IS A 6V TRANSIENT SUPPRESSOR.
NOTE 4: D1 TO D8 ARE SCHOTTKY DIODES.
NOTE 5: THE FUSES ARE OPTIONAL TO PREVENT AC POWER LINE CROSSES FROM COMPROMISING THE TRANSFORMERS.
NOTE 6: THE 68µF IS USED TO KEEP THE LOCAL POWER PLANE POTENTIAL WITHIN TOLERANCE DURING A SURGE.

Figure 21-4. Transmit Waveform Template

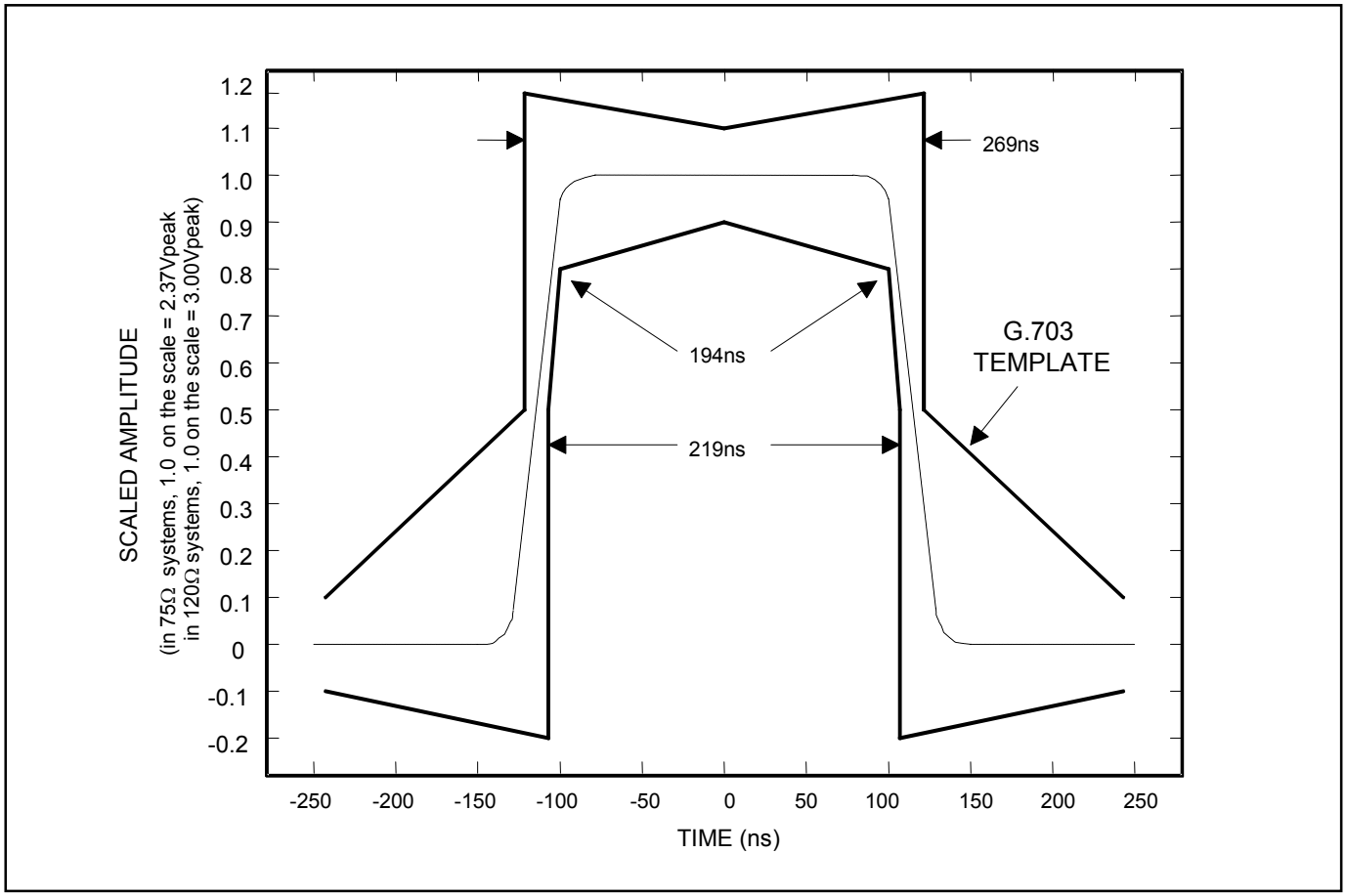

21.4 Jitter Attenuators

The DS21Q58 contains an on-board clock and data jitter attenuator for each transceiver and a single, undedicated "clock only" jitter attenuator. This undedicated jitter attenuator is shown in the block diagram (Figure 3-1) as the alternate jitter attenuator.

21.4.1 Clock and Data Jitter Attenuators

The clock and data jitter attenuators can be mapped into the receive or transmit paths and set to buffer depths of either 32 or 128 bits through the LICR. The 128-bit mode is used in applications where large excursions of wander are expected. The 32-bit mode is used in delay-sensitive applications. The characteristics of the attenuators are shown in Figure 21-6. The jitter attenuators can be placed in either the receive path or the transmit path by appropriately setting or clearing the JAS bit in the LICR. Also, setting the DJA bit in the LICR can disable the jitter attenuator (in effect, remove it). For the jitter attenuator to operate properly, a 2.048MHz clock (±50ppm) must be applied at the MCLK pin. On-board circuitry adjusts either the recovered clock from the clock/data recovery block or the clock applied at the TCLK pin to create a smooth jitter-free clock that is used to clock data out of the jitter attenuator FIFO. It is acceptable to provide a gapped/bursty clock at the TCLK pin if the jitter attenuator is placed on the transmit side. If the incoming jitter exceeds either $120UI_{P-P}$ (buffer depth is 128 bits) or $28UI_{P-P}$ (buffer depth is 32 bits), the DS21Q58 divides the internal nominal 32.768MHz clock by either 15 or 17 instead of the normal 16 to keep the buffer from overflowing. When the device divides by either 15 or 17, it also sets the jitter attenuator limit trip (JALT) bit in the receive information register (RIR.5).

21.4.2 Undedicated Clock Jitter Attenuator

The undedicated jitter attenuator is useful for preparing a user-supplied clock for use as a transmission clock (TCLK). AJACKI is the input pin and AJCAKO is the output pin. Clocks generated by certain types of PLL or other synthesizers can contain too much jitter to be appropriate for transmission. Network requirements limit the amount of jitter that can be transmitted onto the network. This feature is enabled by setting SC1CR.7 = 1 in Transceiver 1.

Figure 21-5. Jitter Tolerance

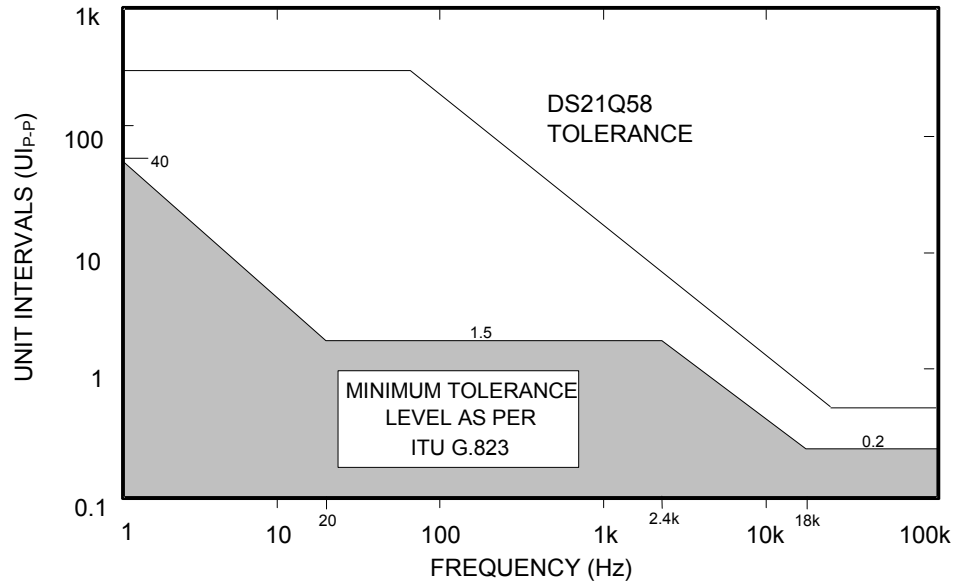

Figure 21-6. Jitter Attenuation

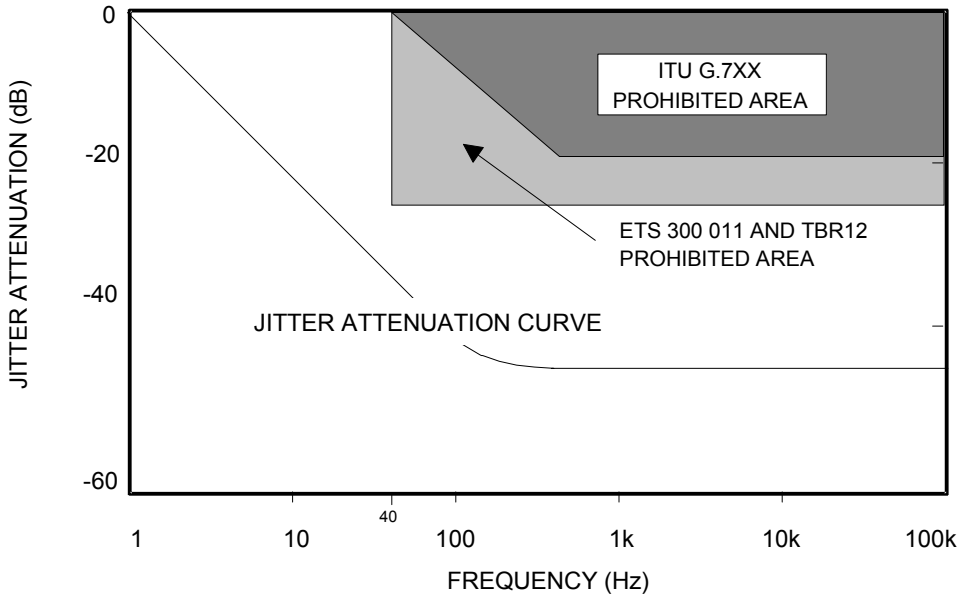

22. CODE MARK INVERSION (CMI)

The DS21Q58 provides a CMI interface for connecting to optical transports. This interface is a unipolar 1T2B-coded signal. Ones are alternately encoded as a logical 1 or 0 level for the full duration of the clock period. Zeros are encoded as a 0-to-1 transition at the middle of the clock period. Figure 22-1 shows an example data pattern and its CMI result. The control bit for enabling CMI is in the OUTAC register, as shown below.

Register Name: **OUTAC**
Register Description: **OUTA Control Register**
Register Address: **1A Hex**

Bit #	7	6	5	4	3	2	1	0
Name	TTLIE	CMII	CMIE	OA4	OA3	OA2	OA1	OA0

NAME	BIT	FUNCTION
TTLIE	7	**TTL Input Enable.** When this bit is set, the receiver can accept TTL positive and negative data at the RTIP and RRING inputs. The data is clocked in on the falling edge of MCLK.
CMII	6	**CMI Invert** 0 = CMI input data not inverted 1 = CMI input data inverted
CMIE	5	**Transmit and Receive CMI Enable** 0 = Transmit and receive line interface operates in normal AMI/HDB3 mode/ 1 = Transmit and receive line interface operate in CMI mode. TTIP is CMI output and RTIP is CMI input. In this mode of operation TRING and RRING are not connected.
OA4	4	**OUTA Control Bit 4.** Inverts OUTA output.
OA3	3	**OUTA Control Bit 3.** See Table 20-1 for details.
OA2	2	**OUTA Control Bit 2.** See Table 20-1 for details.
OA1	1	**OUTA Control Bit 1.** See Table 20-1 for details.
OA0	0	**OUTA Control Bit 0.** See Table 20-1 for details.

Figure 22-1. CMI Coding

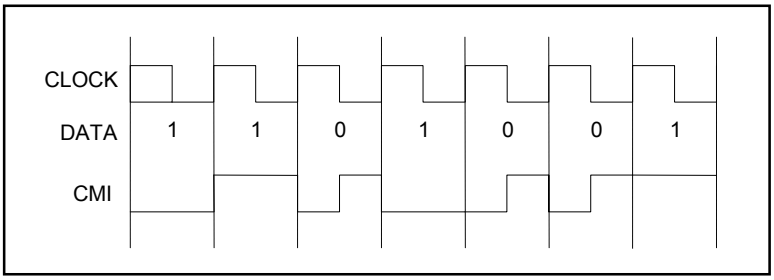

Transmit and receive CMI is enabled through OUTAC.7. When this register bit is set, the TTIP pin outputs CMI-coded data at normal TTL-type levels. This signal can be used to directly drive an optical interface. When CMI is enabled, the user can also use HDB3 coding.

When this register bit is set, the RTIP pin becomes a unipolar CMI input. The CMI signal is processed to extract and align the clock with data. The bipolar code-violation counter counts CVs in the CMI signal. CVs are defined as consecutive ones of the same polarity, as shown in Figure 22-2. If HDB3 precoding is enabled, the CVs generated by HDB3 are not counted as errors.

Figure 22-2. Example of CMI Code Violation

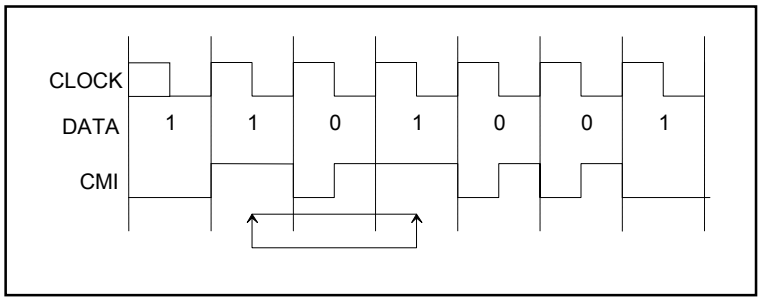

23. INTERLEAVED PCM BUS OPERATION

In many architectures, the PCM outputs of individual framers are combined into higher-speed PCM buses to simplify transport across the system backplane. The DS21Q58 can be configured to allow PCM data buses to be multiplexed into higher-speed data buses, eliminating external hardware and saving board space and cost. The DS21Q58 uses a channel interleave method. See Figure 24-4 and Figure 24-7 for details of the channel interleave.

The interleaved PCM bus option supports three bus speeds. The 4.096MHz bus speed allows two PCM data streams to share a common bus. The 8.192MHz bus speed allows four PCM data streams to share a common bus. The 16.384MHz bus speed allows eight PCM data streams to share a common bus. See Figure 23-1 for an example of four transceivers sharing a common 8.192MHz PCM bus. The receive elastic stores of each transceiver must be enabled. Through the IBO register the user can configure each transceiver for a specific bus speed and position. For all IBO bus configurations each transceiver is assigned an exclusive position in the high-speed PCM bus. When the device is configured for IBO operation, the TSYNCx pin should be configured as an output or as an input connected to ground. The user cannot supply a TSYNCx signal in this mode.

Register Name: **IBO**
Register Description: **Interleave Bus Operation Register**
Register Address: **1C Hex**

Bit #	7	6	5	4	3	2	1	0
Name	—	IBOTCS	SCS1	SCS0	IBOEN	DA2	DA1	DA0

NAME	BIT	FUNCTION
—	7	**Not Assigned.** Should be set to 0.
IBOTCS	6	**IBO Transmit Clock Source** 0 = TCLK pin is the source of transmit clock 1 = Transmit clock is internally derived from the clock at the SYSCLK pin
SCS1	5	**System Clock Select Bit 1** (Table 23-1)
SCS0	4	**System Clock Select Bit 0** (Table 23-1)
IBOEN	3	**Interleave Bus Operation Enable** 0 = IBO disabled 1 = IBO enabled
DA2	2	**Device Assignment Bit 3** (Table 23-2)
DA1	1	**Device Assignment Bit 2** (Table 23-2)
DA0	0	**Device Assignment Bit 1**(Table 23-2)

Table 23-1. IBO System Clock Select

SCS1	SCS0	FUNCTION
0	0	2.048MHz, single device on bus
0	1	4.096MHz, two devices on bus
1	0	8.192MHz, four devices on bus
1	1	16.384MHz, eight devices on bus

Table 23-2. IBO Device Assignment

DA2	DA1	DA0	FUNCTION
0	0	0	1st device on bus
0	0	1	2nd device on bus
0	1	0	3rd device on bus
0	1	1	4th device on bus
1	0	0	5th device on bus
1	0	1	6th device on bus
1	1	0	7th device on bus
1	1	1	8th device on bus

Figure 23-1. IBO Configuration Using Two DS21Q58 Transceivers (Eight E1 Lines)

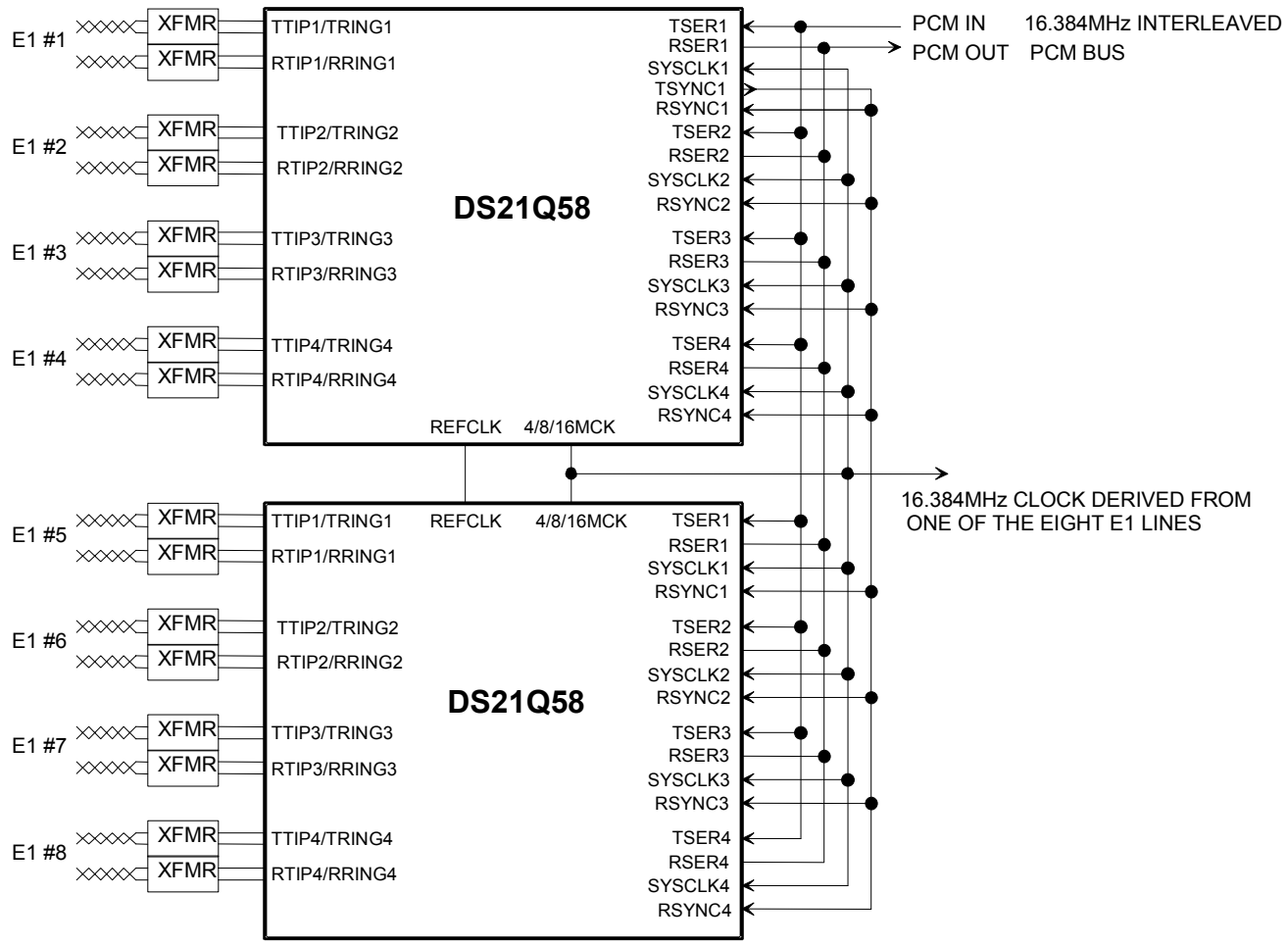

NOTE: SEE SECTION 21 FOR DETAILS ON LINE INTERFACE CIRCUIT.

24. FUNCTIONAL TIMING DIAGRAMS

24.1 Receive

Figure 24-1. Receive Frame and Multiframe Timing

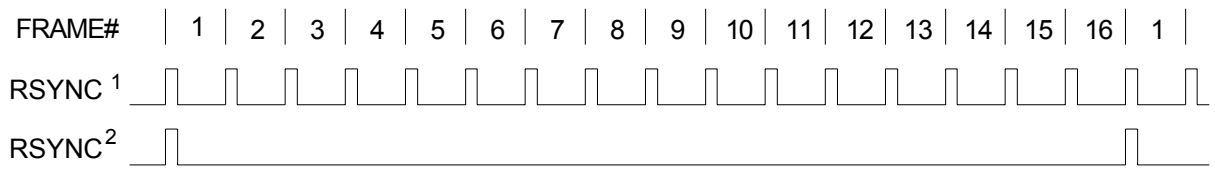

NOTE 1: RSYNC IN FRAME/OUTPUT MODE (RCR.6 = 0).
NOTE 2: RSYNC IN MULTIFRAME/OUTPUT MODE (RCR.6 = 1). THIS DIAGRAM ASSUMES THE CAS MF BEGINS IN THE RAF FRAME.

Figure 24-2. Receive Boundary Timing (With Elastic Store Disabled)

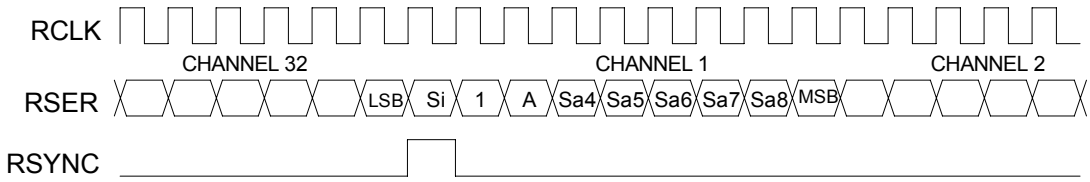

Figure 24-3. Receive Boundary Timing (With Elastic Store Enabled)

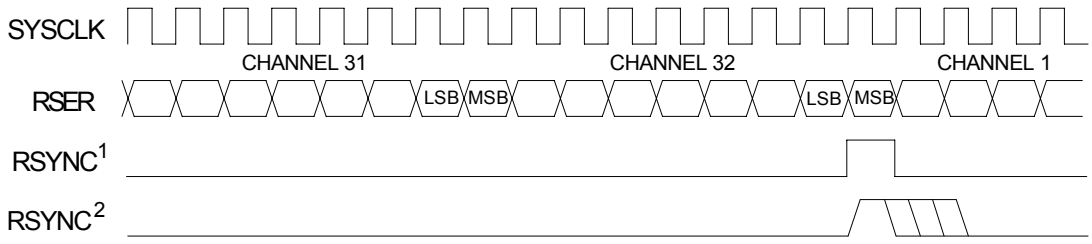

NOTE 1: RSYNC IS IN THE OUTPUT MODE (RCR.5 = 0).
NOTE 2: RSYNC IS IN THE INPUT MODE (RCR.5 = 1).

Figure 24-4. Receive Interleave Bus Operation

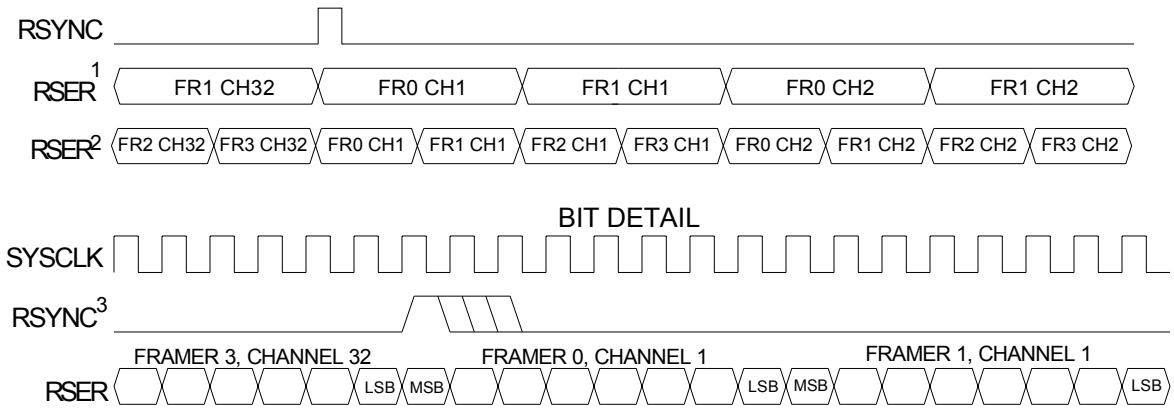

NOTE 1: 4.096MHZ BUS CONFIGURATION.
NOTE 2: 8.192MHZ BUS CONFIGURATION.
NOTE 3: RSYNC IS IN THE INPUT MODE (RCR.5 = 0).

24.2 Transmit

Figure 24-5. Transmit Frame and Multiframe Timing

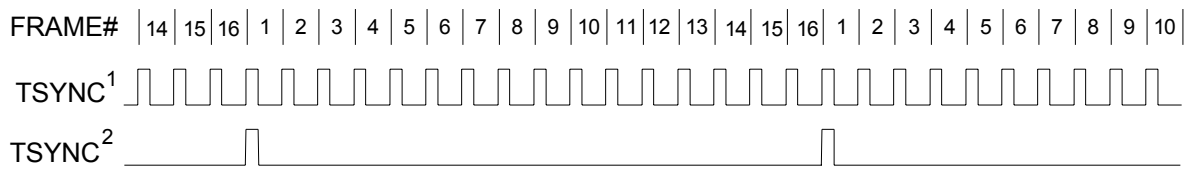

NOTE 1: TSYNC IS IN FRAME MODE (TCR.1 = 0).
NOTE 2: TSYNC IS IN MULTIFRAME MODE (TCR.1 = 1).

Figure 24-6. Transmit Boundary Timing

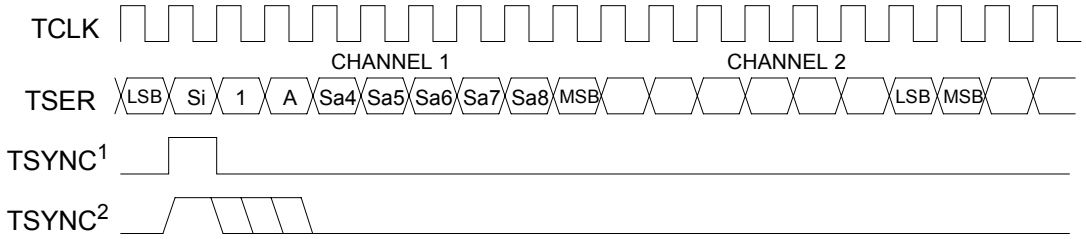

NOTE 1: TSYNC IS IN OUTPUT MODE (TCR.0 = 1).
NOTE 2: TSYNC IS IN INPUT MODE (TCR.0 = 0).

Figure 24-7. Transmit Interleave Bus Operation

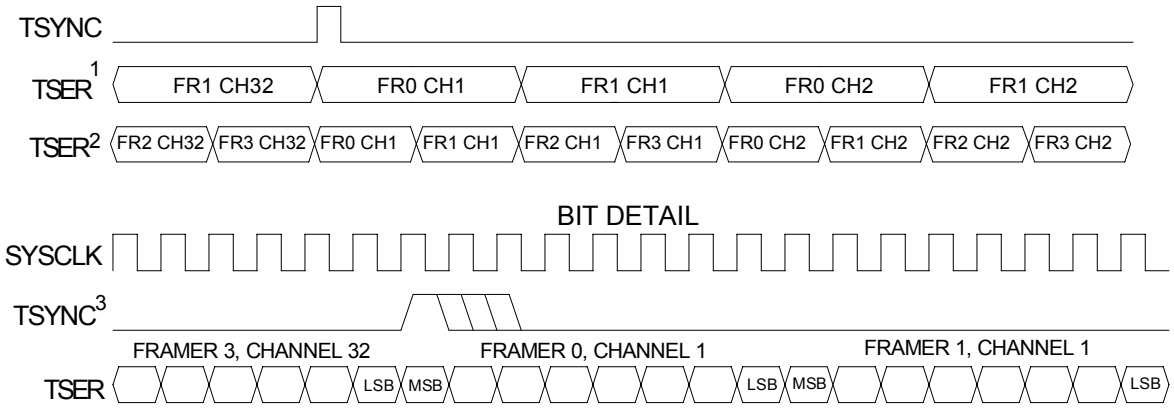

NOTE 1: 4.096MHZ BUS CONFIGURATION.
NOTE 2: 8.192MHZ BUS CONFIGURATION.
NOTE 3: TSYNC IS IN INPUT MODE (TCR.0 = 0).

Figure 24-8. Framer Synchronization Flowchart

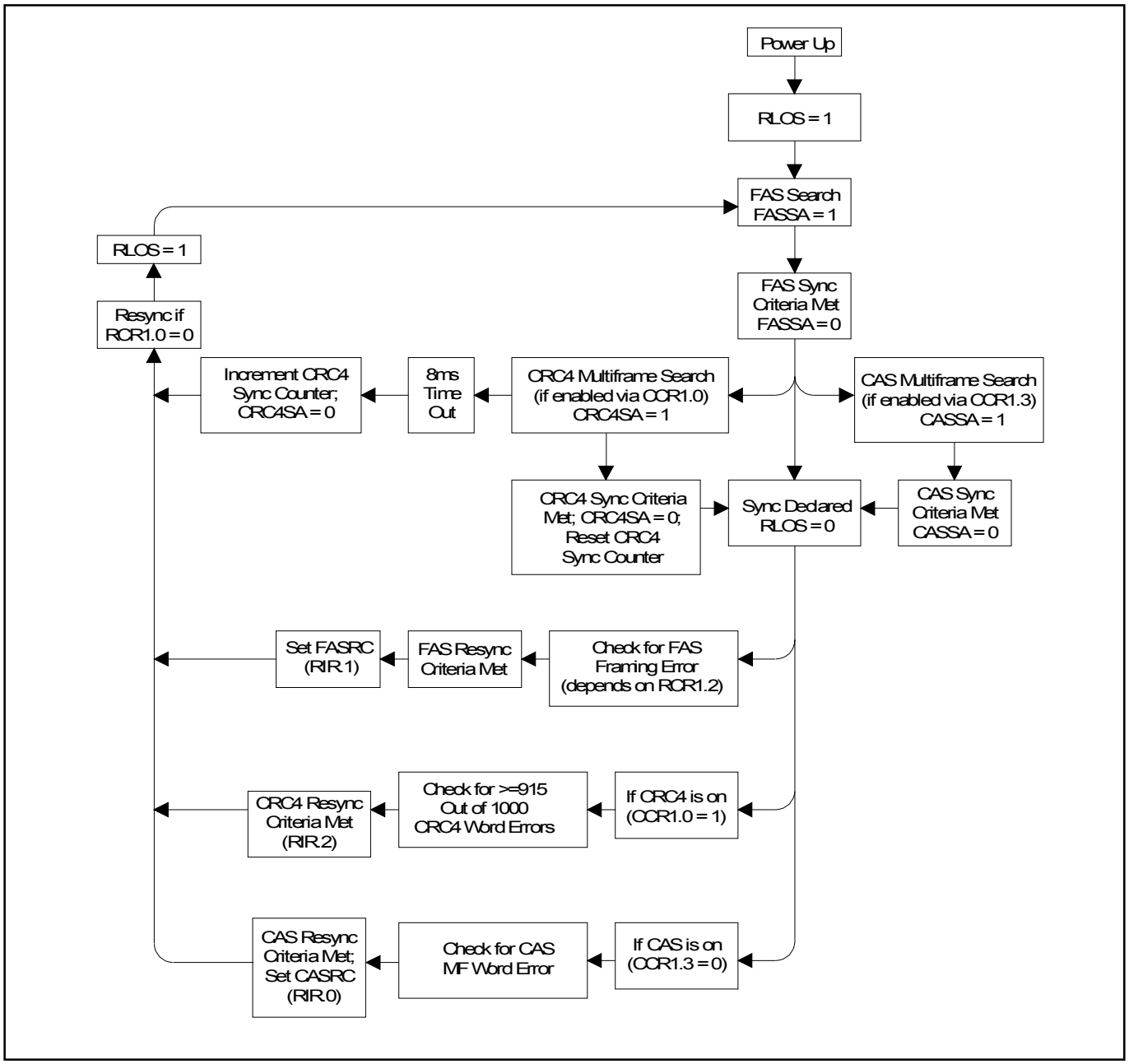

Figure 24-9. Transmit Data Flow

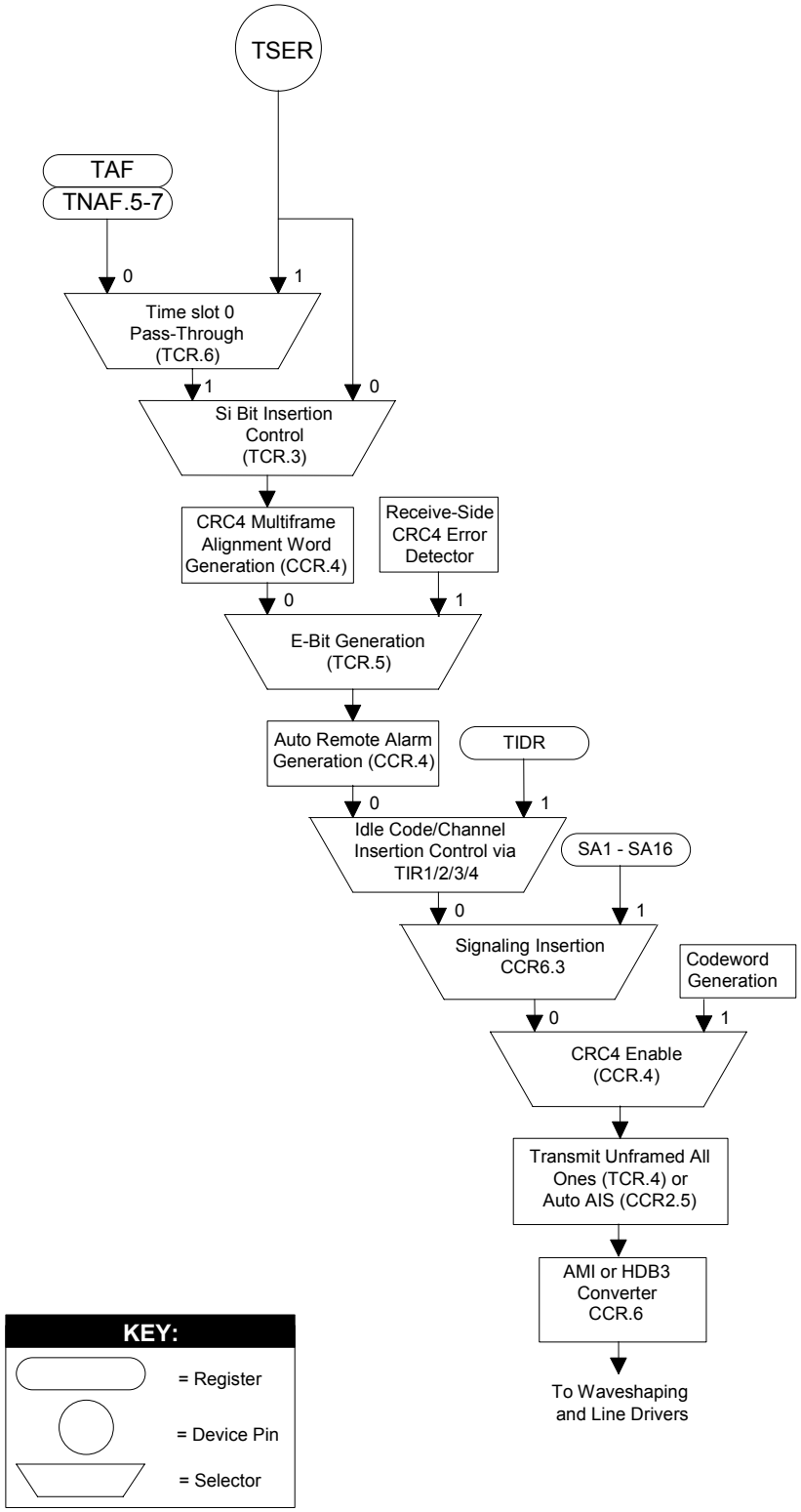

NOTE: AUTO REMOTE ALARM IF ENABLED WILL ONLY OVERWRITE BIT 3 OF TIME SLOT 0 IN THE NOT-ALIGN FRAMES IF THE ALARM NEEDS TO BE SENT.

25. OPERATING PARAMETERS

ABSOLUTE MAXIMUM RATINGS

Voltage Range on Any Pin Relative to Ground	-1.0V to +6.0V
Operating Temperature Range for DS21Q58L	0°C to +70°C
Operating Temperature Range for DS21Q58LN	-40°C to +85°C
Storage Temperature Range	-55°C to +125°C
Soldering Temperature Range	See IPC/JEDEC J-STD-020A Specification

Stresses beyond those listed under "Absolute Maximum Ratings" may cause permanent damage to the device. These are stress ratings only, and functional operation of the device at these or any other conditions beyond those indicated in the operational sections of the specifications is not implied. Exposure to the absolute maximum rating conditions for extended periods may affect device.

RECOMMENDED DC OPERATING CONDITIONS

(T_A = 0°C to +70°C for DS21Q58L; T_A = -40°C to +85°C for DS21Q58LN.)

PARAMETER	SYMBOL	CONDITIONS	MIN	TYP	MAX	UNITS
Logic 1	V_{IH}		2.0		5.5	V
Logic 0	V_{IL}		-0.3		+0.8	V
Supply	V_{DD}	(Note 1)	3.135	3.3	3.465	V

CAPACITANCE

(T_A = +25°C)

PARAMETER	SYMBOL	CONDITIONS	MIN	TYP	MAX	UNITS
Input Capacitance	C_{IN}			5		pF
Output Capacitance	C_{OUT}			7		pF

DC CHARACTERISTICS

(V_{DD} = 3.3V ±5%, T_A = 0°C to +70°C for DS21Q58L; V_{DD} = 3.3V ±5%, T_A = -40°C to +85°C for DS21Q58LN.)

PARAMETER	SYMBOL	CONDITIONS	MIN	TYP	MAX	UNITS
Supply Current at 3.3V	I_{DD}	(Note 2)		230		mA
Input Leakage	I_{IL}	(Note 3)	-1.0		+1.0	µA
Output Leakage	I_{LO}	(Note 4)			+1.0	µA
Output Current (2.4V)	I_{OH}		-1.0			mA
Output Current (0.4V)	I_{OL}		+4.0			mA

Note 1: Applies to RVDD, TVDD, and DVDD.

Note 2: TCLKs = SYSCLKs = MCLK = 2.048MHz; outputs open circuited; TTIPs and TRINGs driving 30Ω; QRSS data pattern; 0.0V < V_{IN} < V_{DD}.

Note 3: Applied to $\overline{INT}$ when tri-stated.

Note 4: Applies to output pins in a tri-state condition.

26. AC TIMING PARAMETERS AND DIAGRAMS

26.1 Multiplexed Bus AC Characteristics

Table 26-1. AC Characteristics—Multiplexed Parallel Port

(V_{DD} = 3.3V ±5%, T_A = 0°C to +70°C for DS21Q58L; V_{DD} = 3.3V ±5%, T_A = -40°C to +85°C for DS21Q58LN.)
(Figure 26-1, Figure 26-2, and Figure 26-3)

PARAMETER	SYMBOL	CONDITIONS	MIN	TYP	MAX	UNITS
Cycle Time	t_{CYC}		200			ns
Pulse Width, DS Low or $\overline{RD}$ High	PW_{EL}		100			ns
Pulse Width, DS High or $\overline{RD}$ Low	PW_{EH}		100			ns
Input Rise/Fall Times	t_R, t_F				20	ns
R/$\overline{W}$ Hold Time	t_{RWH}		10			ns
R/$\overline{W}$ Setup Time Before DS High	t_{RWS}		50			ns
$\overline{CS}$ Setup Time Before DS, $\overline{WR}$, or $\overline{RD}$ Active	t_{CS}		20			ns
$\overline{CS}$ Hold Time	t_{CH}		0			ns
Read Data Hold Time	t_{DHR}		10		50	ns
Write Data Hold Time	t_{DHW}		0			ns
Muxed Address Valid to AS or ALE Fall	t_{ASL}		15			ns
Muxed Address Hold Time	t_{AHL}		10			ns
Delay Time DS, $\overline{WR}$, or $\overline{RD}$ to AS or ALE Rise	t_{ASD}		20			ns
Pulse Width AS or ALE High	PW_{ASH}		30			ns
Delay Time, AS or ALE to DS, $\overline{WR}$, or $\overline{RD}$	t_{ASED}		10			ns
Output Data-Delay Time from DS or $\overline{RD}$	t_{DDR}		20		140	ns
Data Setup Time	t_{DSW}		50			ns

Figure 26-1. Intel Bus Read AC Timing (PBTS = 0)

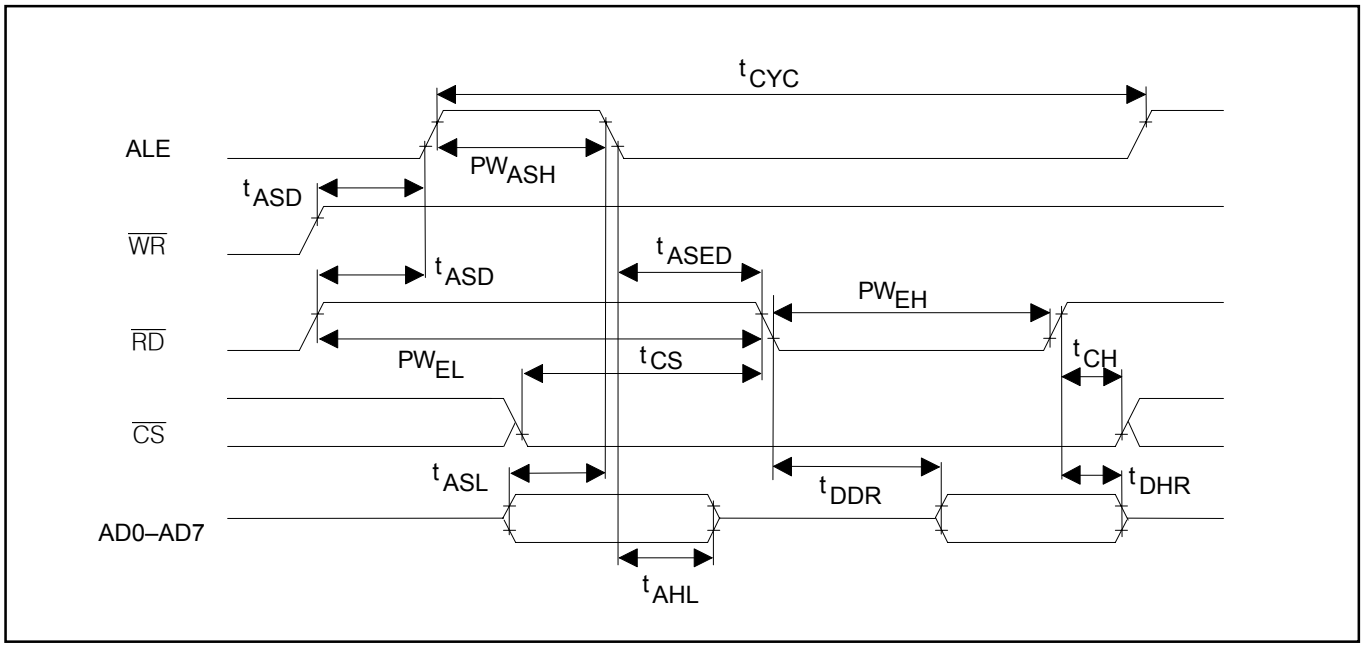

Figure 26-2. Intel Bus Write Timing (PBTS = 0)

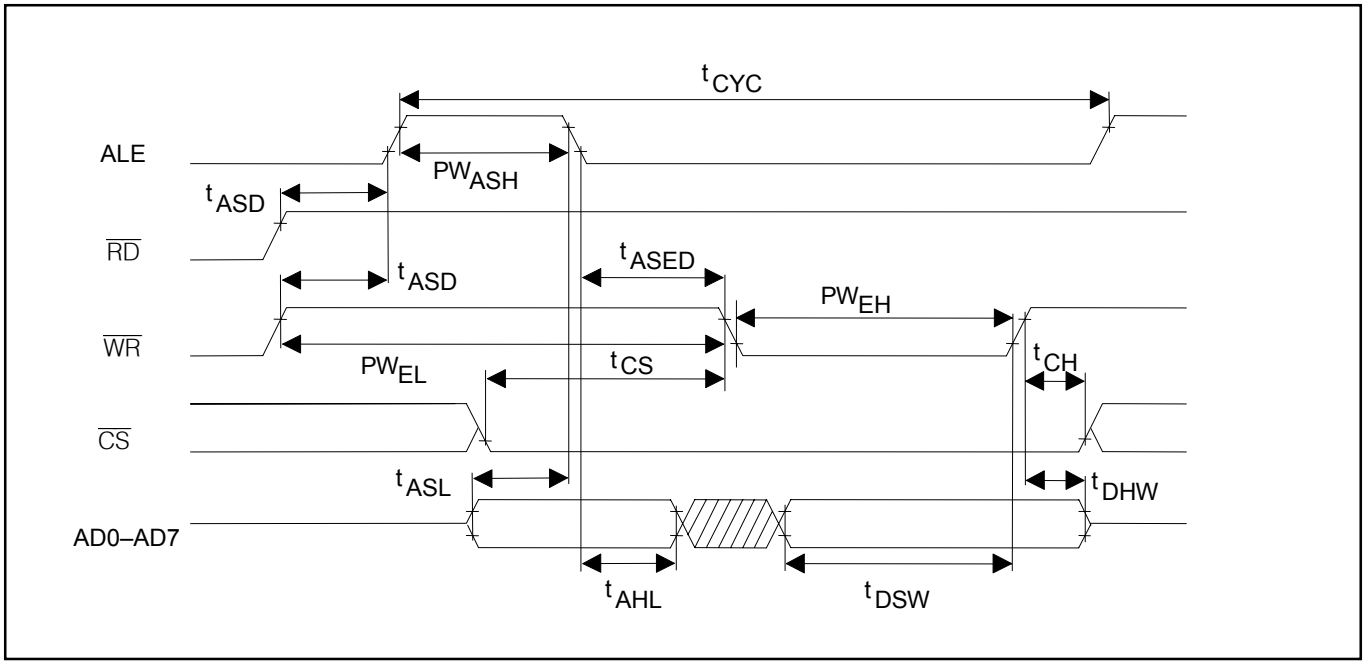

Figure 26-3. Motorola Bus AC Timing (PBTS = 1)

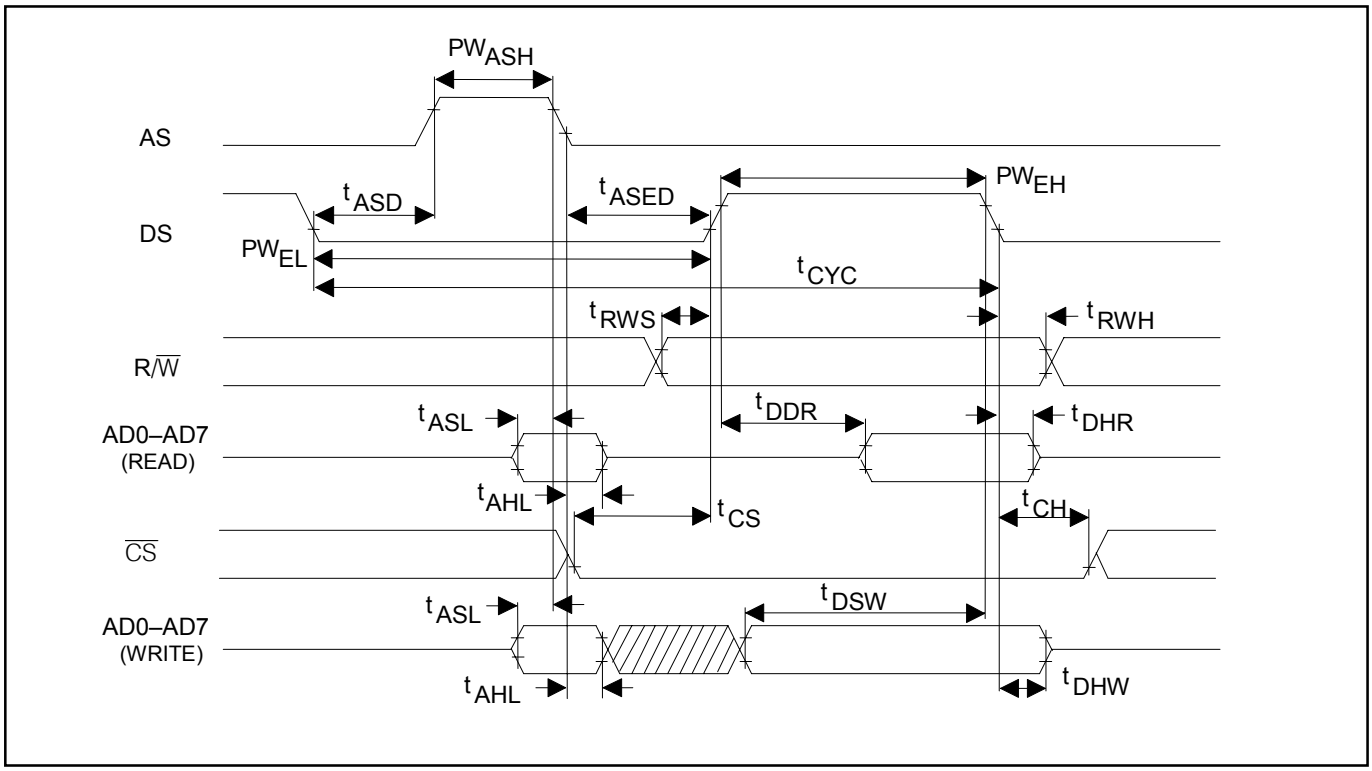

26.2 Nonmultiplexed Bus AC Characteristics

Table 26-2. AC Characteristics—Nonmultiplexed Parallel Port

(V_{DD} = 3.3V ±5%, T_A = 0°C to +70°C for DS21Q58L; V_{DD} = 3.3V ±5%, T_A = -40°C to +85°C for DS21Q58LN.)
(Figure 26-4 through Figure 26-7)

PARAMETER	SYMBOL	CONDITIONS	MIN	TYP	MAX	UNITS
Setup Time for A0 to A7, Valid to $\overline{CS}$ Active	t1		0			ns
Setup Time for $\overline{CS}$ Active to Either $\overline{RD}$, $\overline{WR}$, or $\overline{DS}$ Active	t2		0			ns
Delay Time from Either $\overline{RD}$ or $\overline{DS}$ Active to Data Valid	t3				140	ns
Hold Time from Either $\overline{RD}$, $\overline{WR}$, or $\overline{DS}$ Inactive to $\overline{CS}$ Inactive	t4		0			ns
Hold Time from $\overline{CS}$ Inactive to Data Bus Tri-State	t5		5.0		20	ns
Wait Time from Either $\overline{WR}$ or $\overline{DS}$ Active to Latch Data	t6		75			ns
Data Setup Time to Either $\overline{WR}$ or $\overline{DS}$ Inactive	t7		10			ns
Data Hold Time from Either $\overline{WR}$ or $\overline{DS}$ Inactive	t8		10			ns
Address Hold from Either $\overline{WR}$ or $\overline{DS}$ Inactive	t9		10			ns

Figure 26-4. Intel Bus Read Timing (PBTS = 0)

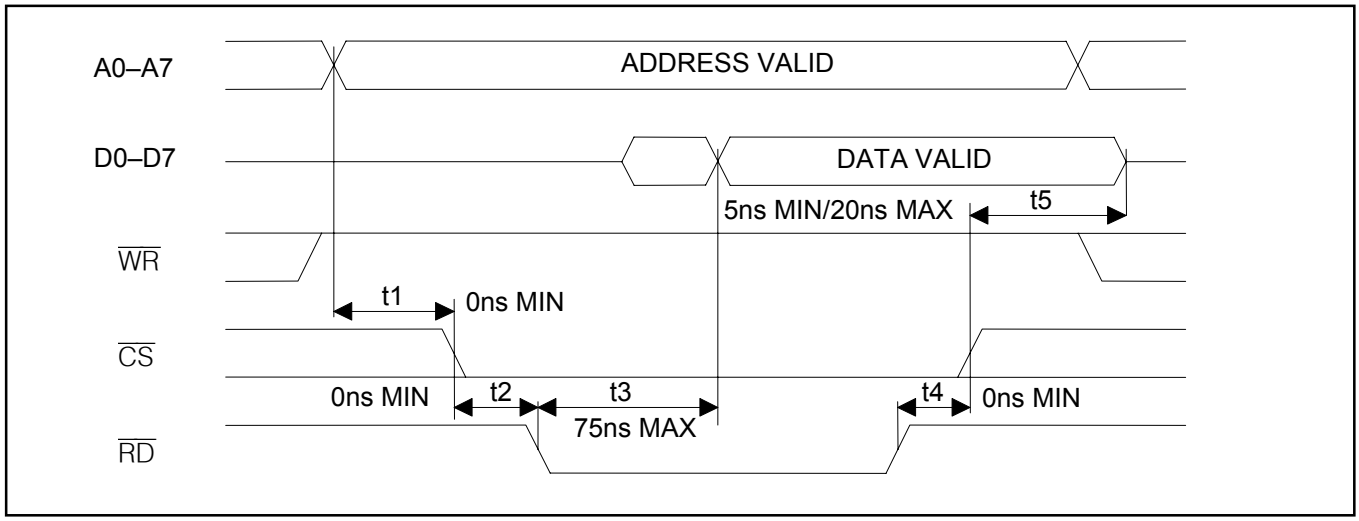

Figure 26-5. Intel Bus Write Timing (PBTS = 0)

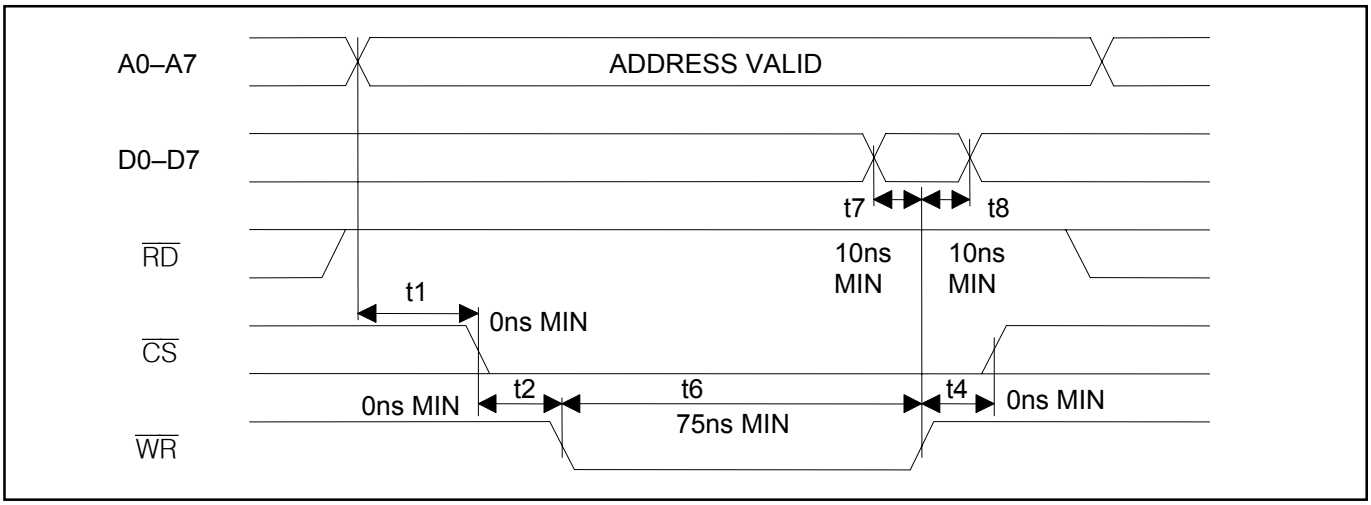

Figure 26-6. Motorola Bus Read Timing (PBTS = 1)

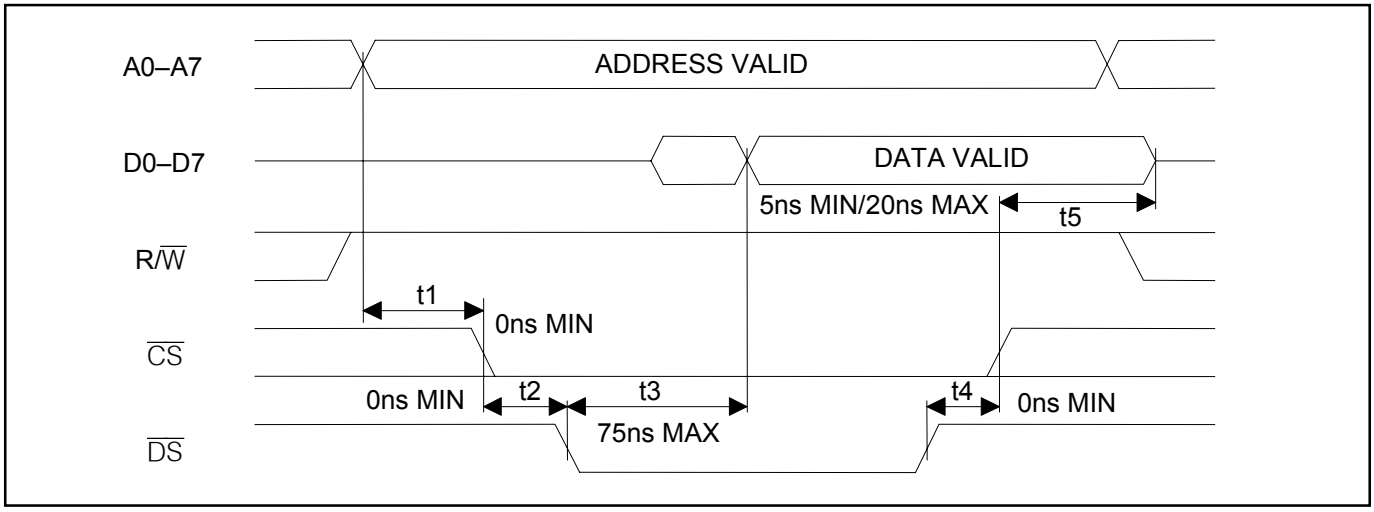

Figure 26-7. Motorola Bus Write Timing (PBTS = 1)

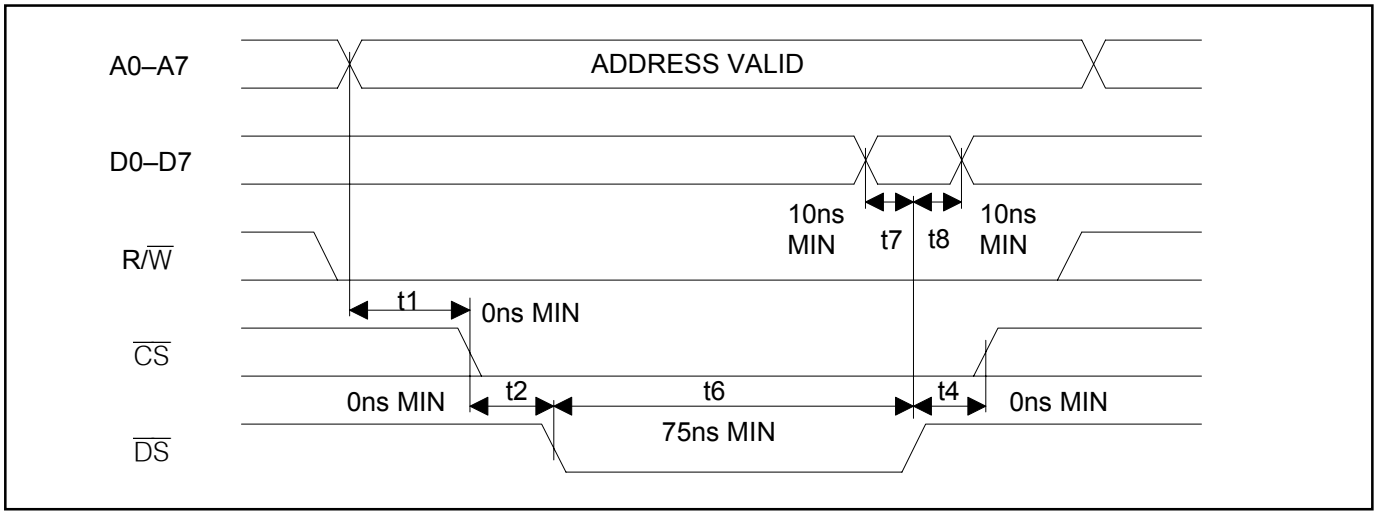

26.3 Serial Port

Table 26-3. AC Characteristics—Serial Port (BTS1 = 1, BTS0 = 0)

(V_{DD} = 3.3V ±5%, T_A = 0°C to +70°C for DS21Q58L; V_{DD} = 3.3V ±5%, T_A = -40°C to +85°C for DS21Q58LN.)
(Figure 26-8)

PARAMETER	SYMBOL	CONDITIONS	MIN	TYP	MAX	UNITS
Setup Time $\overline{CS}$ to SCLK	t_{CSS}		50			ns
Setup Time SDI to SCLK	t_{SSS}		50			ns
Hold Time SCLK to SDI	t_{SSH}		50			ns
SCLK High/Low Time	t_{SLH}		200			ns
SCLK Rise/Fall Time	t_{SRF}				50	ns
SCLK to $\overline{CS}$ Inactive	t_{LSC}		50			ns
$\overline{CS}$ Inactive Time	t_{CM}		250			ns
SCLK to SDO Valid	t_{SSV}				50	ns
SCLK to SDO Tri-State	t_{SSH}			100		ns
$\overline{CS}$ Inactive to SDO Tri-State	t_{CSH}			100		ns

Figure 26-8. Serial Bus Timing (BTS1 = 1, BTS0 = 0)

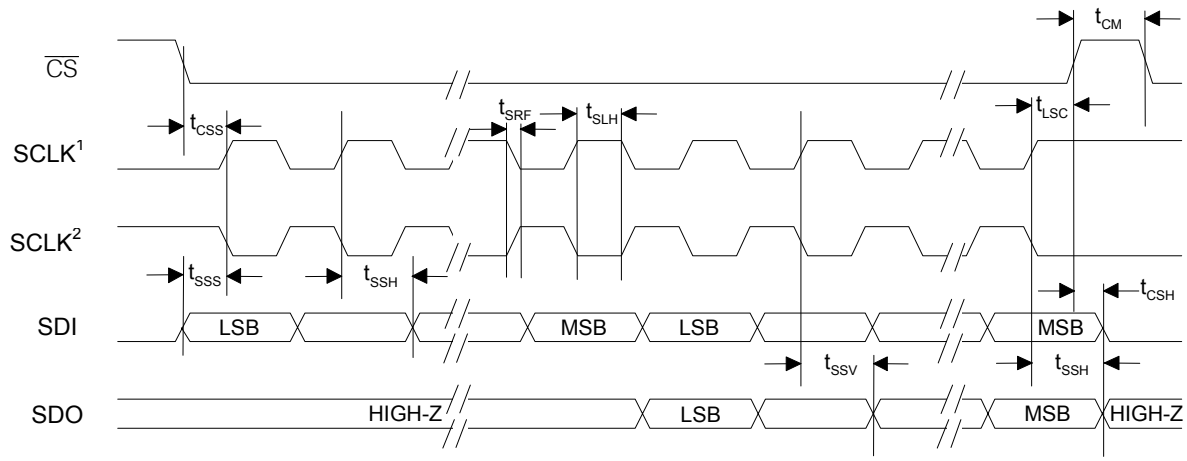

NOTE 1: OCES = 1 AND ICES = 0.
NOTE 2: OCES = 0 AND ICES = 1.

26.4 Receive AC Characteristics

Table 26-4. AC Characteristics—Receive

(V_{DD} = 3.3V ±5%, T_A = 0°C to +70°C for DS21Q58L; V_{DD} = 3.3V ±5%, T_A = -40°C to +85°C for DS21Q58LN.) (Figure 26-9 and Figure 26-10)

PARAMETER	SYMBOL	CONDITIONS	MIN	TYP	MAX	UNITS
SYSCLK Period	t_{SP}	(Note 1)	122	488		ns
SYSCLK Pulse Width	t_{SH}		50			ns
	t_{SL}		50			
RSYNC Setup to SYSCLK Falling	t_{SU}		20		t_{SH} - 5	ns
RSYNC Pulse Width	t_{PW}		50			ns
Delay RCLK to RSER Valid	t_{D1}				50	ns
Delay RCLK to RSYNC, OUTA, OUTB	t_{D2}				50	ns
Delay SYSCLK to RSER Valid	t_{D3}				50	ns
Delay SYSCLK to RSYNC, OUTA, OUTB	t_{D4}				50	ns

Note 1: SYSCLK = 2.048MHz.

Figure 26-9. Receive AC Timing (Receive Elastic Store Disabled)

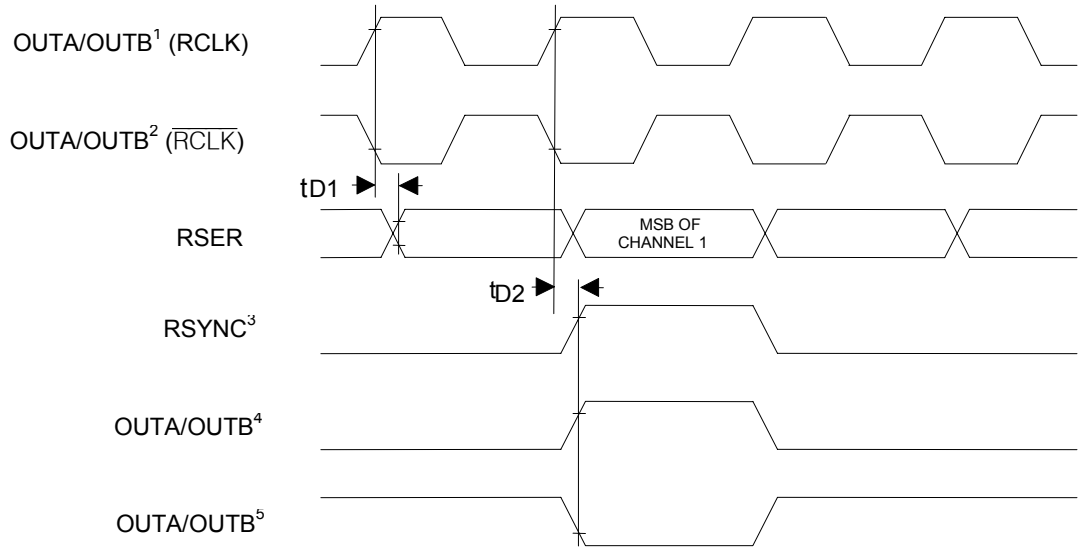

NOTE 1: OUTA OR OUTB CONFIGURED TO OUTPUT RCLK (NONINVERTED).
NOTE 2: OUTA OR OUTB CONFIGURED TO OUTPUT RCLK (INVERTED).
NOTE 3: RSYNC IS IN OUTPUT MODE (RCR1.5 = 0).
NOTE 4: OUTA OR OUTB CONFIGURED TO OUTPUT RFSYNC, CRC4 MF SYNC, OR CAS MF SYNC (NONINVERTED).
NOTE 5: OUTA OR OUTB CONFIGURED TO OUTPUT RFSYNC, CRC4 MF SYNC, OR CAS MF SYNC (INVERTED).

Figure 26-10. Receive AC Timing (Receive Elastic Store Enabled)

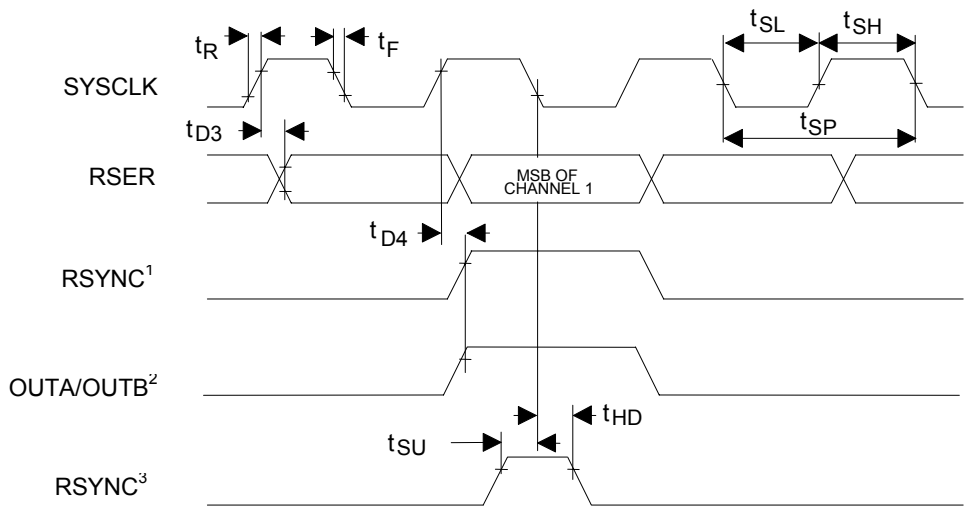

NOTE 1: RSYNC IS IN OUTPUT MODE (RCR.5 = 0).
NOTE 2: OUTA OR OUTB CONFIGURED AS CRCR MF SYNC OR CAS MF SYNC.
NOTE 3: RSYNC IS IN OUTPUT MODE (RCR.5 = 1).

26.5 Transmit AC Characteristics

Table 26-5. AC Characteristics—Transmit

(V_{DD} = 3.3V ±5%, T_A = 0°C to +70°C for DS21Q58L; V_{DD} = 3.3V ±5%, T_A = -40°C to +85°C for DS21Q58LN.)
(Figure 26-11 and Figure 26-12)

PARAMETER	SYMBOL	CONDITIONS	MIN	TYP	MAX	UNITS
TCLK Period	t_{CP}			488		ns
TCLK Pulse Width	t_{CH}		75			ns
	t_{CL}		75			
TSYNC Setup to TCLK	t_{SU}		20		t_{CH} - 5 or t_{SH} - 5	ns
TSYNC Pulse Width	t_{PW}		50			ns
TSER Setup to TCLK Falling	t_{SU}		20			ns
TSER Hold from TCLK Falling	t_{HD}		20			ns
TCLK Rise and Fall Times	t_R, t_F				25	ns

Figure 26-11. Transmit AC Timing (IBO Disabled)

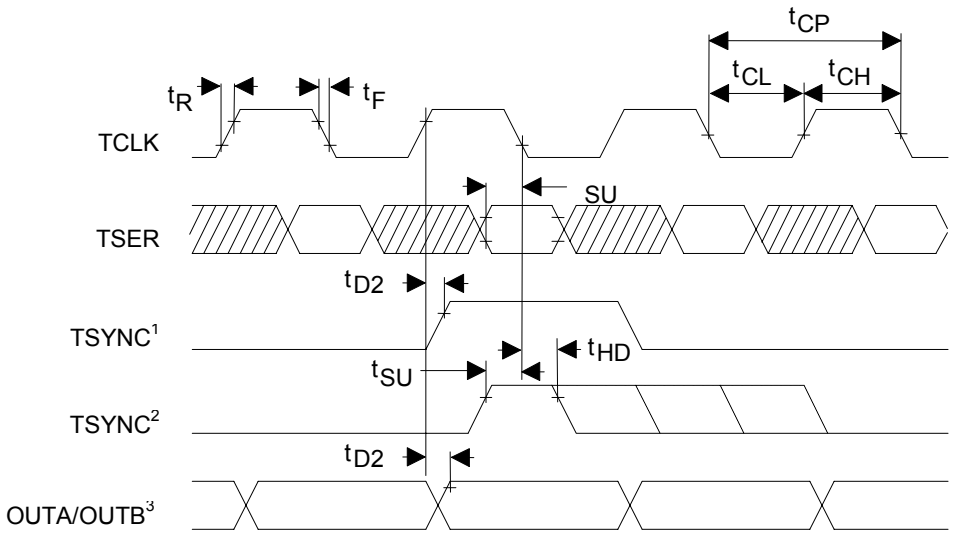

NOTE 1: TSYNC IS IN OUTPUT MODE (TCR.0 = 1).
NOTE 2: TSYNC IS IN INPUT MODE (TCR.0 = 0).
NOTE 3: APPLIES TO OUTA AND OUTB WHEN CONFIGURED FOR TPOS AND TNEG OUTPUTS.

Figure 26-12. Transmit AC Timing (IBO Enabled)

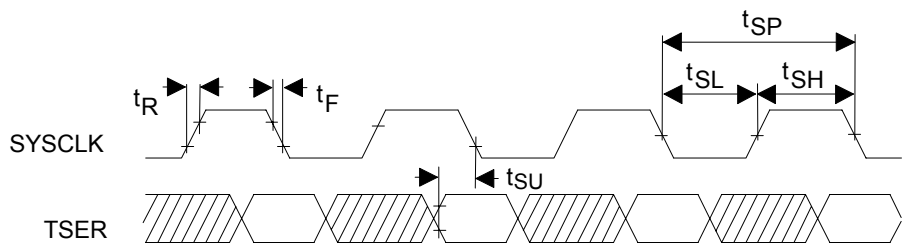

NOTE: TSER IS ONLY SAMPLED ON THE FALLING EDGE OF SYSCLK WHEN IBO MODE IS ENABLED.

26.6 Special Modes AC Characteristics

Table 26-6. AC Characteristics—Special Modes

(V_{DD} = 3.3V ±5%, T_A = 0°C to +70°C for DS21Q58L; V_{DD} = 3.3V ±5%, T_A = -40°C to +85°C for DS21Q58LN.) (Figure 26-13)

PARAMETER	SYMBOL	CONDITIONS	MIN	TYP	MAX	UNITS
RTIP Period	t_{CP}			488		ns
RTIP Pulse Width	t_{CH}		75			ns
	t_{CL}		75			
RTIP Setup to RRING Falling	t_{SU}		20			ns
TSER Hold from TCLK Falling	t_{HD}		20			ns
RTIP, RRING Rise and Fall Times	t_R, t_F				25	ns

Special Mode: OUTBC.7 = 1.
Note: RTIP and RRING become NRZ data and clock inputs.

Figure 26-13. NRZ Input AC Timing

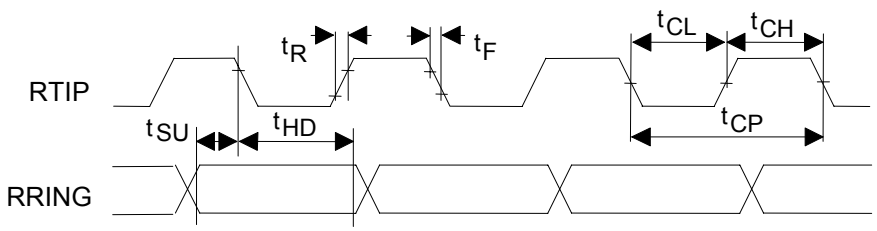

27. PACKAGE INFORMATION

(The package drawing(s) in this data sheet may not reflect the most current specifications. For the latest package outline information, go to **www.maxim-ic.com/DallasPackInfo**.)

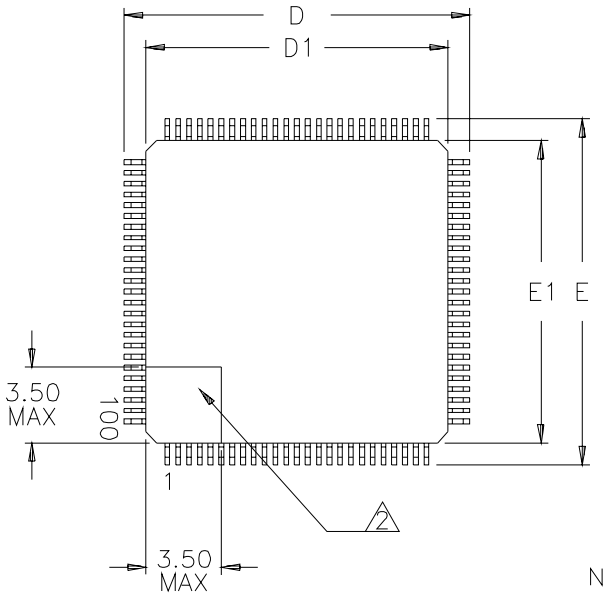

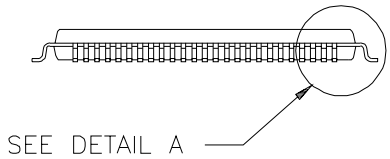

NOTES:

1. DIMENSIONS D1 AND E1 INCLUDE MOLD MISMATCH, BUT DO NOT INCLUDE MOLD PROTRUSION; ALLOWABLE PROTRUSION IS 0.25 MM PER SIDE.
2. DETAILS OF PIN 1 IDENTIFIER ARE OPTIONAL BUT MUST BE LOCATED WITHIN THE ZONE INDICATED.
3. ALLOWABLE DAMBAR PROTRUSION IS 0.08 MM TOTAL IN EXCESS OF THE b DIMENSION; PROTRUSION NOT TO BE LOCATED ON LOWER RADIUS OR FOOT OF LEAD.
4. ALL DIMENSIONS ARE IN MILLIMETERS.

DIM	MIN	MAX
A	–	1.60
A1	0.05	–
A2	1.35	1.45
b	0.17	0.27
c	0.09	0.20
D	15.80	16.20
D1	14.00 BSC	
E	15.80	16.20
E1	14.00 BSC	
e	0.50 BSC	
L	0.45	0.75

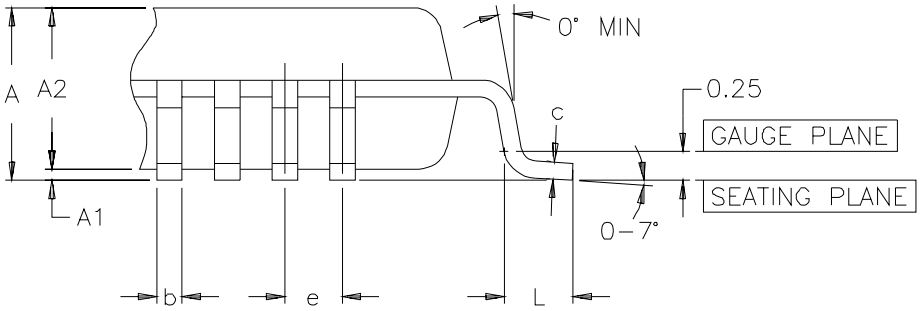

DETAIL A

28. REVISION HISTORY

DATE	DESCRIPTION
062003	New product release.
012104	Added Monitor Mode Section 21.2 Corrected Figures 26-1, 26-2, 26-3

Maxim/Dallas Semiconductor cannot assume responsibility for use of any circuitry other than circuitry entirely embodied in a Maxim/Dallas Semiconductor product. No circuit patent licenses are implied. Maxim/Dallas Semiconductor reserves the right to change the circuitry and specifications without notice at any time.

Maxim Integrated Products, 120 San Gabriel Drive, Sunnyvale, CA 94086 408-737-7600

© 2004 Maxim Integrated Products • Printed USA