查询DS90CF583供应商 捷多邦，专业PCB打样工厂，24小时加急出货

National Semiconductor

November 1996

DS90CF583/DS90CF584 LVDS 24-Bit Color Flat Panel Display (FPD) Link—65 MHz

General Description

The DS90CF583 transmitter converts 28 bits of CMOS/TTL data into four LVDS (Low Voltage Differential Signaling) data streams. A phase-locked transmit clock is transmitted in parallel with the data streams over a fifth LVDS link. Every cycle of the transmit clock 28 bits of input data are sampled and transmitted. The DS90CF584 receiver converts the LVDS data streams back into 28 bits of CMOS/TTL data. At a transmit clock frequency of 65 MHz, 24 bits of RGB data and 4 bits of LCD timing and control data (FPLINE, FPFRAME, DRDY, CONTROL) are transmitted at a rate of 455 Mbps per LVDS data channel. Using a 65 MHz clock, the data throughput is 227 Mbytes per second. These devices are offered with falling edge data strobes for convenient interface with a variety of graphics and LCD panel controllers.

This chipset is an ideal means to solve EMI and cable size problems associated with wide, high speed TTL interfaces.

Features

- 20 to 65 MHz shift clk support
- Up to 227 Mbytes/s bandwidth
- Cable size is reduced to save cost
- 290 mV swing LVDS devices for low EMI
- Low power CMOS design (< 550 mW typ)
- Power-down mode saves power (< 0.25 mW)
- PLL requires no external components
- Low profile 56-lead TSSOP package
- Falling edge data strobe
- Compatible with TIA/EIA-644 LVDS standard
- Single pixel per clock XGA (1024 x 768)
- Supports VGA, SVGA, XGA and higher
- 1.8 Gbps throughput

Block Diagrams

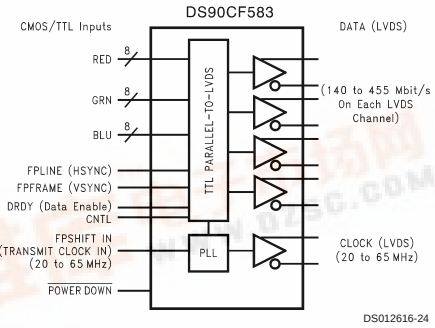

Order Number DS90CF583MTD
See NS Package Number MTD56

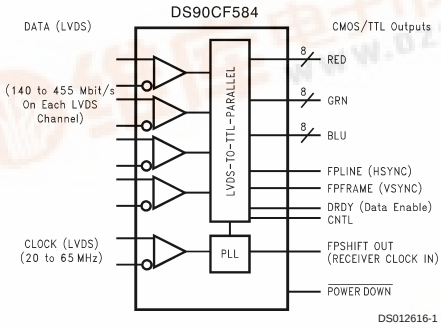

Order Number DS90CF584MTD
See NS Package Number MTD56

TRI-STATE® is a registered trademark of National Semiconductor Corporation.

© 1998 National Semiconductor Corporation

找PDF 维库一下 pdf.dzsc.com

Block Diagrams (Continued)

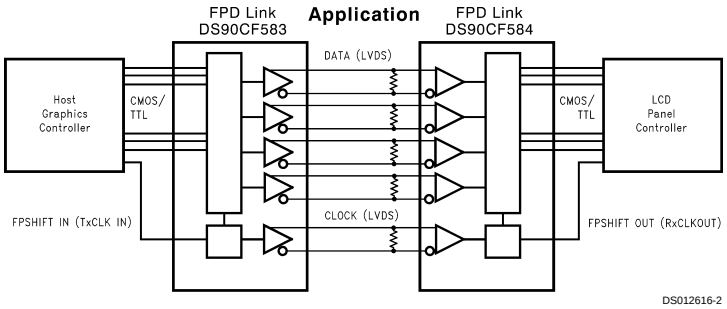

Absolute Maximum Ratings (Note 1)

If Military/Aerospace specified devices are required, please contact the National Semiconductor Sales Office/ Distributors for availability and specifications.

Supply Voltage (V_{CC})	−0.3V to +6V
CMOS/TTL Input Voltage	−0.3V to (V_{CC} + 0.3V)
CMOS/TTL Output Voltage	−0.3V to (V_{CC} + 0.3V)
LVDS Receiver Input Voltage	−0.3V to (V_{CC} + 0.3V)
LVDS Driver Output Voltage	−0.3V to (V_{CC} + 0.3V)
LVDS Output Short Circuit Duration	Continuous
Junction Temperature	+150˚C
Storage Temperature	−65˚C to +150˚C
Lead Temperature (Soldering, 4 sec)	+260˚C
Maximum Power Dissipation @ 25˚C	
MTD56 (TSSOP) Package:	
DS90CF583	1.63W
DS90CF584	1.61W
Package Derating:	
DS90CF583	12.5 mW/˚C above +25˚C
DS90CF584	12.4 mW/˚C above +25˚C

This device does not meet 2000V ESD rating (Note 4) .

Recommended Operating Conditions

	Min	Nom	Max	Units
Supply Voltage (V_{CC})	4.75	5.0	5.25	V
Operating Free Air Temperature (T_A)	−10	+25	+70	˚C
Receiver Input Range	0		2.4	V
Supply Noise Voltage (V_{CC})			100	mV_{P-P}

Electrical Characteristics

Over recommended operating supply and temperature ranges unless otherwise specified

Symbol	Parameter	Conditions		Min	Typ	Max	Units
CMOS/TTL DC SPECIFICATIONS							
V_{IH}	High Level Input Voltage			2.0		V_{CC}	V
V_{IL}	Low Level Input Voltage			GND		0.8	V
V_{OH}	High Level Output Voltage	I_{OH} = −0.4 mA		3.8	4.9		V
V_{OL}	Low Level Output Voltage	I_{OL} = 2 mA			0.1	0.3	V
V_{CL}	Input Clamp Voltage	I_{CL} = −18 mA			−0.79	−1.5	V
I_{IN}	Input Current	V_{IN} = V_{CC}, GND, 2.5V or 0.4V			±5.1	±10	µA
I_{OS}	Output Short Circuit Current	V_{OUT} = 0V				−120	mA
LVDS DRIVER DC SPECIFICATIONS							
V_{OD}	Differential Output Voltage	R_L = 100Ω		250	290	450	mV
ΔV_{OD}	Change in V_{OD} between Complementary Output States					35	mV
V_{CM}	Common Mode Voltage			1.1	1.25	1.375	V
ΔV_{CM}	Change in V_{CM} between Complementary Output States					35	mV
V_{OH}	High Level Output Voltage				1.3	1.6	V
V_{OL}	Low Level Output Voltage			0.9	1.01		V
I_{OS}	Output Short Circuit Current	V_{OUT} = 0V, R_L = 100Ω			−2.9	−5	mA
I_{OZ}	Output TRI-STATE® Current	$\overline{\text{Power Down}}$ = 0V, V_{OUT} = 0V or V_{CC}			±1	±10	µA
LVDS RECEIVER DC SPECIFICATIONS							
V_{TH}	Differential Input High Threshold	V_{CM} = +1.2V				+100	mV
V_{TL}	Differential Input Low Threshold			−100			mV
I_{IN}	Input Current	V_{IN} = +2.4V	V_{CC} = 5.5V			±10	µA
		V_{IN} = 0V				±10	µA
TRANSMITTER SUPPLY CURRENT							
I_{CCTW}	Transmitter Supply Current, Worst Case	R_L = 100Ω, C_L = 5 pF, Worst Case Pattern (*Figure 1*, *Figure 3*)	f = 32.5 MHz		49	63	mA
			f = 37.5 MHz		51	64	mA
			f = 65 MHz		70	84	mA
I_{CCTG}	Transmitter Supply Current, 16 Grayscale	R_L = 100Ω, C_L = 5 pF, 16 Grayscale Pattern (*Figure 2*, *Figure 3*)	f = 32.5 MHz		40	55	mA
			f = 37.5 MHz		41	55	mA
			f = 65 MHz		55	67	mA

Electrical Characteristics (Continued)

Over recommended operating supply and temperature ranges unless otherwise specified

Symbol	Parameter	Conditions		Min	Typ	Max	Units
TRANSMITTER SUPPLY CURRENT							
I_{CCTZ}	Transmitter Supply Current, Power Down	$\overline{\text{Power Down}}$ = Low			1	25	µA
RECEIVER SUPPLY CURRENT							
I_{CCRW}	Receiver Supply Current, Worst Case	C_L = 8 pF, Worst Case Pattern (*Figure 1*, *Figure 4*)	f = 32.5 MHz		64	77	mA
			f = 37.5 MHz		70	85	mA
			f = 65 MHz		110	140	mA
I_{CCRG}	Receiver Supply Current, 16 Grayscale	C_L = 8 pF, 16 Grayscale Pattern (*Figure 2*, *Figure 4*)	f = 32.5 MHz		35	55	mA
			f = 37.5 MHz		37	55	mA
			f = 65 MHz		55	67	mA
I_{CCRZ}	Receiver Supply Current, Power Down	$\overline{\text{Power Down}}$ = Low			1	10	µA

Note 1: "Absolute Maximum Ratings" are those values beyond which the safety of the device cannot be guaranteed. They are not meant to imply that the device should be operated at these limits. The tables of "Electrical Characteristics" specify conditions for device operation.

Note 2: Typical values are given for V_{CC} = 5.0V and T_A = +25˚C.

Note 3: Current into device pins is defined as positive. Current out of device pins is defined as negative. Voltages are referenced to ground unless otherwise specified (except V_{OD} and ΔV_{OD}).

Note 4: ESD Rating: HBM (1.5 kΩ, 100 pF)

PLL V_{CC} ≥ 1000V

All other pins ≥ 2000V

EIAJ (0Ω, 200 pF) ≥ 150V

Transmitter Switching Characteristics

Over recommended operating supply and temperature ranges unless otherwise specified

Symbol	Parameter		Min	Typ	Max	Units
LLHT	LVDS Low-to-High Transition Time (*Figure 3*)			0.75	1.5	ns
LHLT	LVDS High-to-Low Transition Time (*Figure 3*)			0.75	1.5	ns
TCIT	TxCLK IN Transition Time (*Figure 5*)				8	ns
TCCS	TxOUT Channel-to-Channel Skew (Note 5) (*Figure 6*)				350	ps
TCCD	TxCLK IN to TxCLK OUT Delay @ 25˚C, V_{CC} = 5.0V (*Figure 9*)		3.5		8.5	ns
TCIP	TxCLK IN Period (*Figure 7*)		15	T	50	ns
TCIH	TxCLK IN High Time (*Figure 7*)		0.35T	0.5T	0.65T	ns
TCIL	TxCLK IN Low Time (*Figure 7*)		0.35T	0.5T	0.65T	ns
TSTC	TxIN Setup to TxCLK IN (*Figure 7*)	f = 65 MHz	5	3.5		ns
THTC	TxIN Hold to TxCLK IN (*Figure 7*)		2.5	1.5		ns
TPDD	Transmitter Powerdown Delay (*Figure 18*)				100	ns
TPLLS	Transmitter Phase Lock Loop Set (*Figure 11*)				10	ms
TPPos0	Transmitter Output Pulse Position 0 (*Figure 13*)		−0.30	0	0.30	ns
TPPos1	Transmitter Output Pulse Position 1		1.70	1/7 T_{clk}	2.50	ns
TPPos2	Transmitter Output Pulse Position 2		3.60	2/7 T_{clk}	4.50	ns
TPPos3	Transmitter Output Pulse Position 3		5.90	3/7 T_{clk}	6.75	ns
TPPos4	Transmitter Output Pulse Position 4		8.30	4/7 T_{clk}	9.00	ns
TPPos5	Transmitter Output Pulse Position 5		10.40	5/7 T_{clk}	11.10	ns
TPPos6	Transmitter Output Pulse Position 6		12.70	6/7 T_{clk}	13.40	ns

Note 5: This limit based on bench characterization.

Receiver Switching Characteristics

Over recommended operating supply and temperature ranges unless otherwise specified.

Symbol	Parameter		Min	Typ	Max	Units
CLHT	CMOS/TTL Low-to-High Transition Time (*Figure 4*)			2.5	4.0	ns
CHLT	CMOS/TTL High-to-Low Transition Time (*Figure 4*)			2.0	3.5	ns
RCOP	RxCLK OUT Period		15	T	50	ns
RCOH	RxCLK OUT High Time	f = 65 MHz	7.8	9		ns
RCOL	RxCLK OUT Low Time	f = 65 MHz	3.8	5		ns
RSRC	RxOUT Setup to RxCLK OUT	f = 65 MHz	2.5	4.2		ns
RHRC	RxOUT Hold to RxCLK OUT	f = 65 MHz	4.0	5.2		ns
RCCD	RxCLK IN to RxCLK OUT Delay @ 25˚C, V_{CC} = 5.0V (*Figure 10*)		6.4		10.7	ns
RPLLS	Receiver Phase Lock Loop Set (*Figure 12*)				10	ms
RSKM	RxIN Skew Margin (Note 6) (*Figure 14*)	V_{CC} = 5V, T_A =25˚C	600			ps
RPDD	Receiver Powerdown (*Figure 17*)				1	µs

Note 6: Receiver Skew Margin is defined as the valid data sampling region at the receiver inputs. This margin takes into account transmitter output skew (TCCS) and the setup and hold time (internal data sampling window), allowing for LVDS cable skew dependent on type/length and source clock (TxCLK IN) jitter.

RSKM ≥ cable skew (type, length) + source clock jitter (cycle to cycle)

AC Timing Diagrams

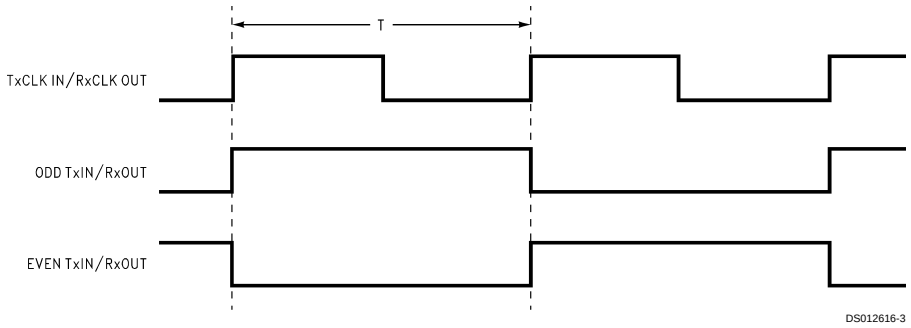

FIGURE 1. "Worst Case" Test Pattern

AC Timing Diagrams (Continued)

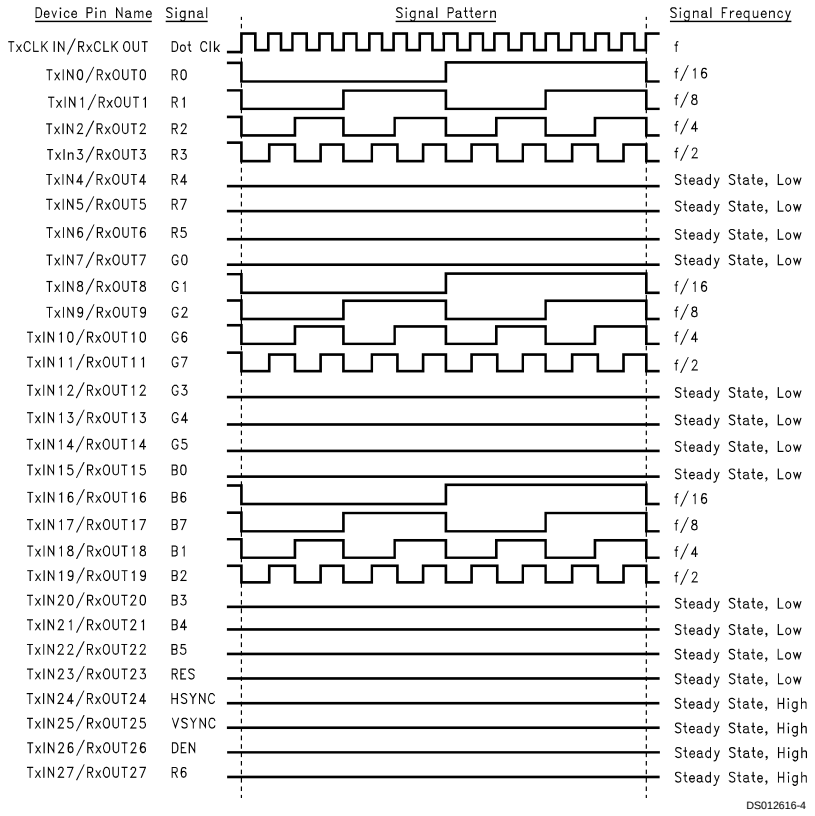

FIGURE 2. "16 Grayscale" Test Pattern

Note 7: The worst case test pattern produces a maximum toggling of digital circuits, LVDS I/O and CMOS/TTL I/O.

Note 8: The 16 grayscale test pattern tests device power consumption for a "typical" LCD display pattern. The test pattern approximates signal switching needed to produce groups of 16 vertical stripes across the display.

Note 9: *Figure 1* and *Figure 2* show a falling edge data strobe (TxCLK IN/RxCLK OUT).

Note 10: Recommended pin to signal mapping. Customer may choose to define differently.

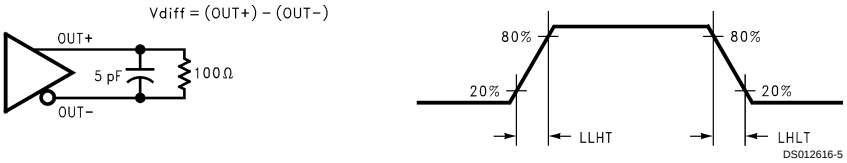

FIGURE 3. DS90CF583 (Transmitter) LVDS Output Load and Transition Times

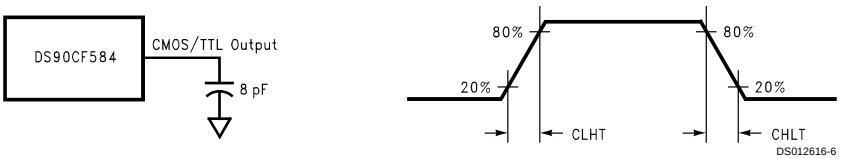

FIGURE 4. DS90CF584 (Receiver) CMOS/TTL Output Load and Transition Times

AC Timing Diagrams (Continued)

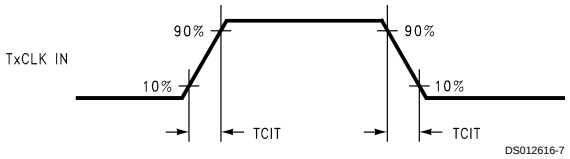

FIGURE 5. DS90CF583 (Transmitter) Input Clock Transition Time

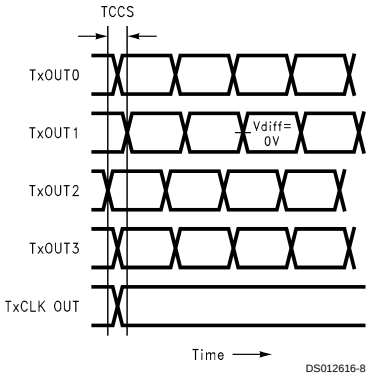

Note: Measurements at Vdiff = 0V
Note: TCSS measured between earliest and latest LVDS edges.
Note: TxCLK Differential High→Low Edge

FIGURE 6. DS90CF583 (Transmitter) Channel-to-Channel Skew and Pulse Width

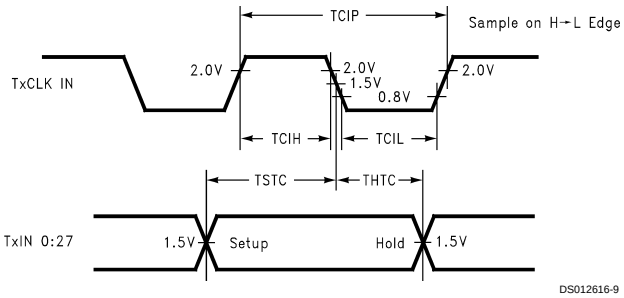

FIGURE 7. DS90CF583 (Transmitter) Setup/Hold and High/Low Times

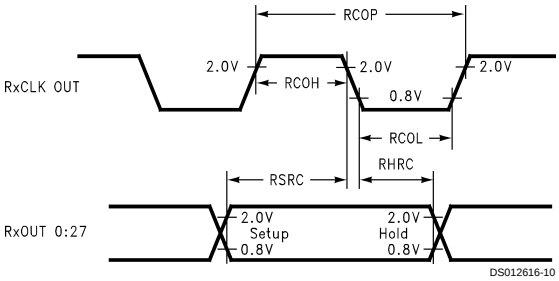

FIGURE 8. DS90CF584 (Receiver) Clock In to Clock Out Delay

AC Timing Diagrams (Continued)

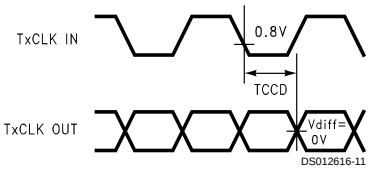

FIGURE 9. DS90CF583 (Transmitter) Clock In to Clock Out Delay

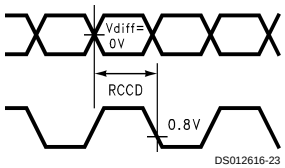

FIGURE 10. DS90CF584 (Receiver) Clock In to Clock Out Delay

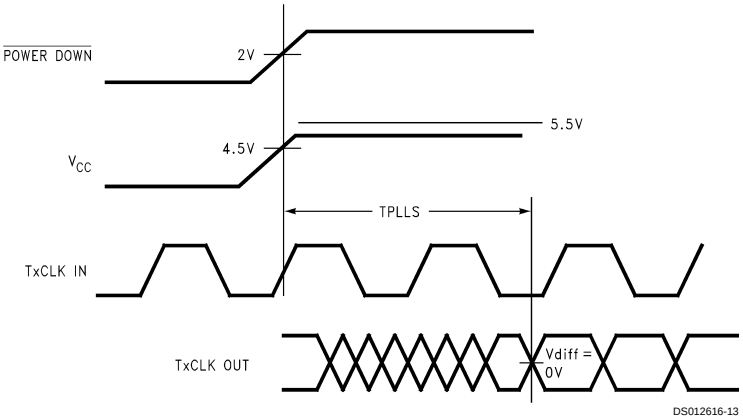

FIGURE 11. DS90CF583 (Transmitter) Phase Lock Loop Set Time

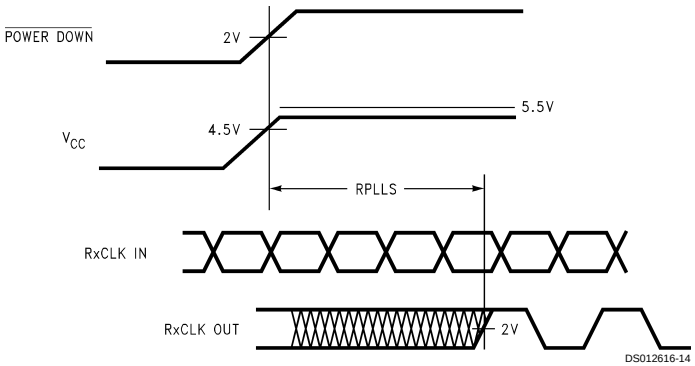

FIGURE 12. DS90CF584 (Receiver) Phase Lock Loop Set Time

AC Timing Diagrams (Continued)

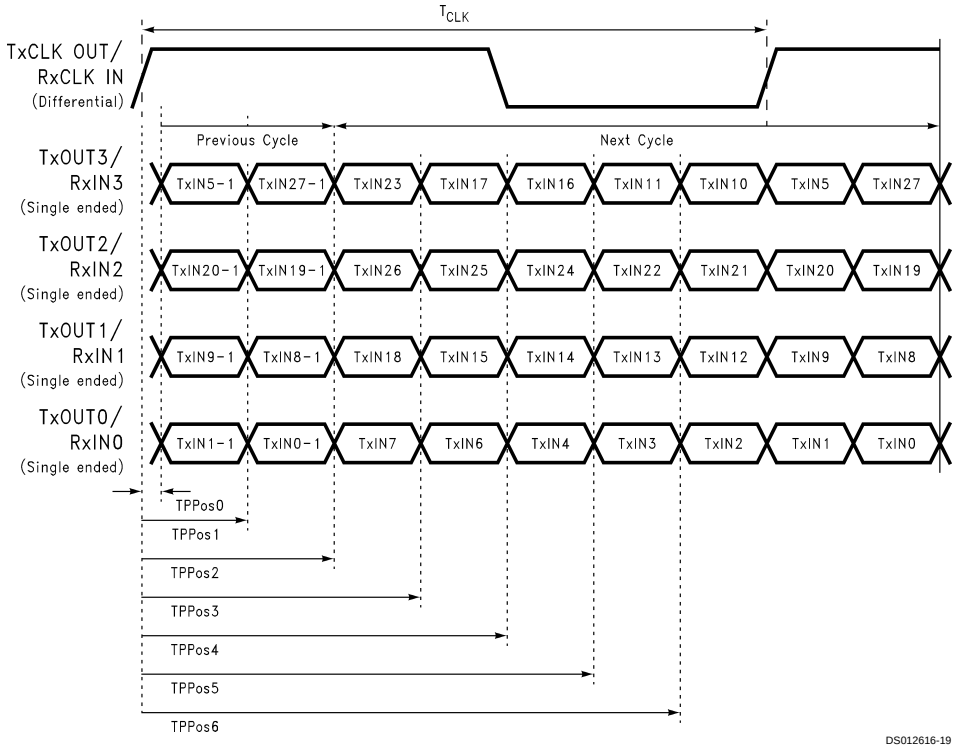

FIGURE 13. Receiver LVDS Input Pulse Position Measurement

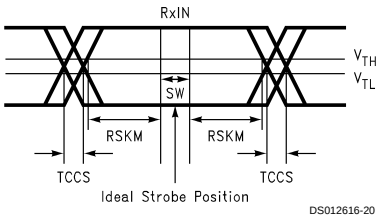

SW — Setup and Hold Time (Internal Data Sampling Window)
TCCS — Transmitter Output Skew
RSKM ≥ Cable Skew (type, length) + Source Clock Jitter (cycle to cycle)
Cable Skew — typically 10 ps–40 ps per foot

FIGURE 14. Receiver LVDS Input Skew Margin

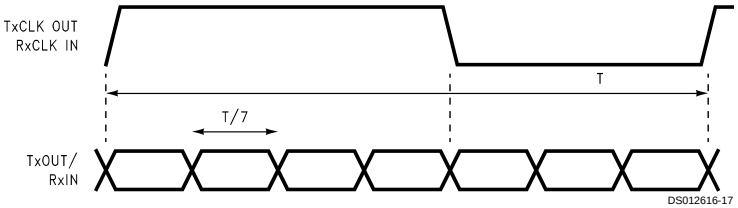

FIGURE 15. Seven Bits of LVDS in One Clock Cycle

AC Timing Diagrams (Continued)

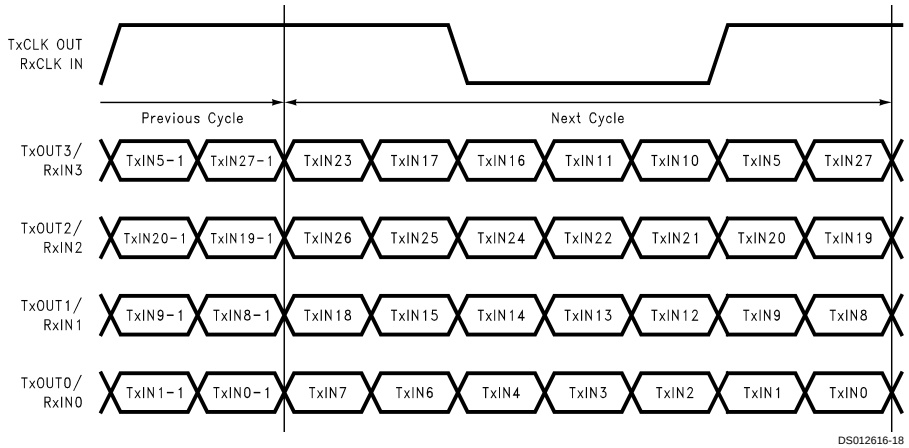

FIGURE 16. Parallel TTL Data Inputs Mapped to LVDS Outputs (DS90CF583)

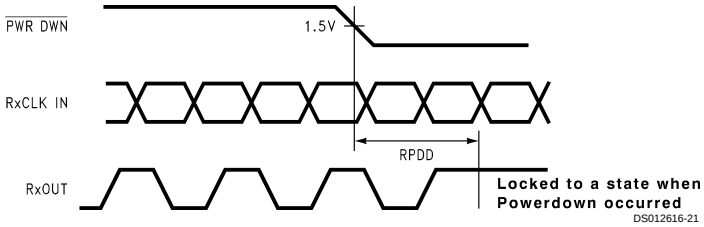

FIGURE 17. Receiver Powerdown Delay

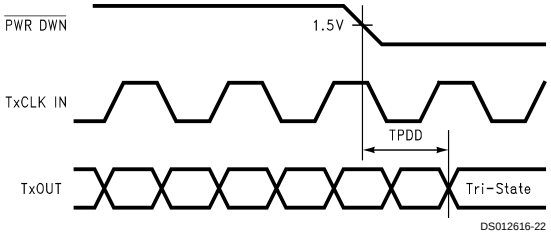

FIGURE 18. Transmitter Powerdown Delay

DS90CF583 Pin Descriptions — FPD Link Transmitter

Pin Name	I/O	No.	Description
TxIN	I	28	TTL level input. This includes: 8 Red, 8 Green, 8 Blue, and 4 control lines — FPLINE, FPFRAME, DRDY and CNTL (also referred to as HSYNC, VSYNC, Data Enable, CNTL)
TxOUT+	O	4	Positive LVDS differential data output
TxOUT−	O	4	Negative LVDS differential data output
FPSHIFT IN	I	1	TTL level clock input. The falling edge acts as data strobe
TxCLK OUT+	O	1	Positive LVDS differential clock output
TxCLK OUT−	O	1	Negative LVDS differential clock output
$\overline{\text{PWR DOWN}}$	I	1	TTL level input. Assertion (low input) TRI-STATES the outputs, ensuring low current at power down
V_{CC}	I	4	Power supply pins for TTL inputs

DS90CF583 Pin Descriptions — FPD Link Transmitter (Continued)

Pin Name	I/O	No.	Description
GND	I	5	Ground pins for TTL inputs
PLL V_{CC}	I	1	Power supply pin for PLL
PLL GND	I	2	Ground pins for PLL
LVDS V_{CC}	I	1	Power supply pin for LVDS outputs
LVDS GND	I	3	Ground pins for LVDS outputs

DS90CF584 Pin Descriptions — FPD Link Receiver

Pin Name	I/O	No.	Description
RxIN+	I	4	Positive LVDS differential data inputs
RxIN−	I	4	Negative LVDS differential data inputs
RxOUT	O	28	TTL level data outputs. This includes: 8 Red, 8 Green, 8 Blue, and 4 control lines — FPLINE, FPFRAME, DRDY and CNTL (also referred to as HSYNC, VSYNC, Data Enable, CNTL)
RxCLK IN+	I	1	Positive LVDS differential clock input
RxCLK IN−	I	1	Negative LVDS differential clock input
FPSHIFT OUT	O	1	TTL level clock output. The falling edge acts as data strobe
$\overline{\text{PWR DOWN}}$	I	1	TTL level input. Assertion (low input) maintains the receiver outputs in the previous state
V_{CC}	I	4	Power supply pins for TTL outputs
GND	I	5	Ground pins for TTL outputs
PLL V_{CC}	I	1	Power supply for PLL
PLL GND	I	2	Ground pin for PLL
LVDS V_{CC}	I	1	Power supply pin for LVDS inputs
LVDS GND	I	3	Ground pins for LVDS inputs

Connection Diagrams

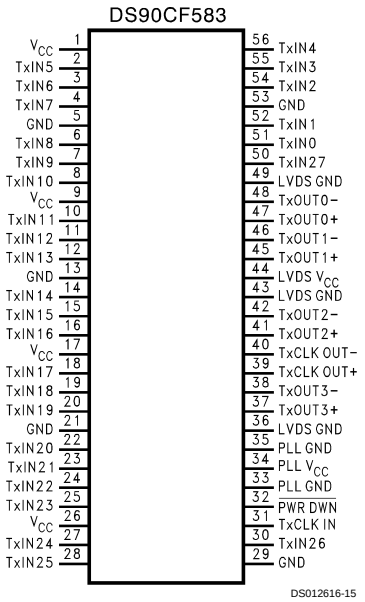

DS012616-15

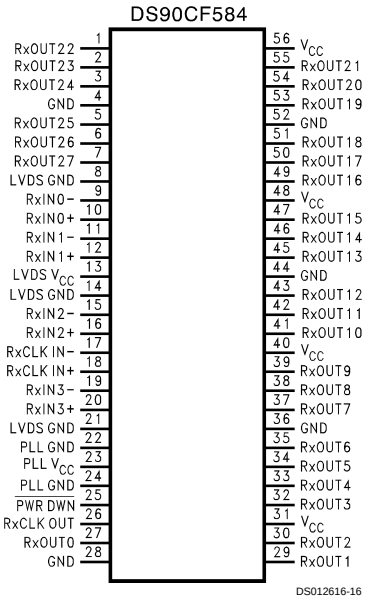

DS012616-16

Physical Dimensions inches (millimeters) unless otherwise noted

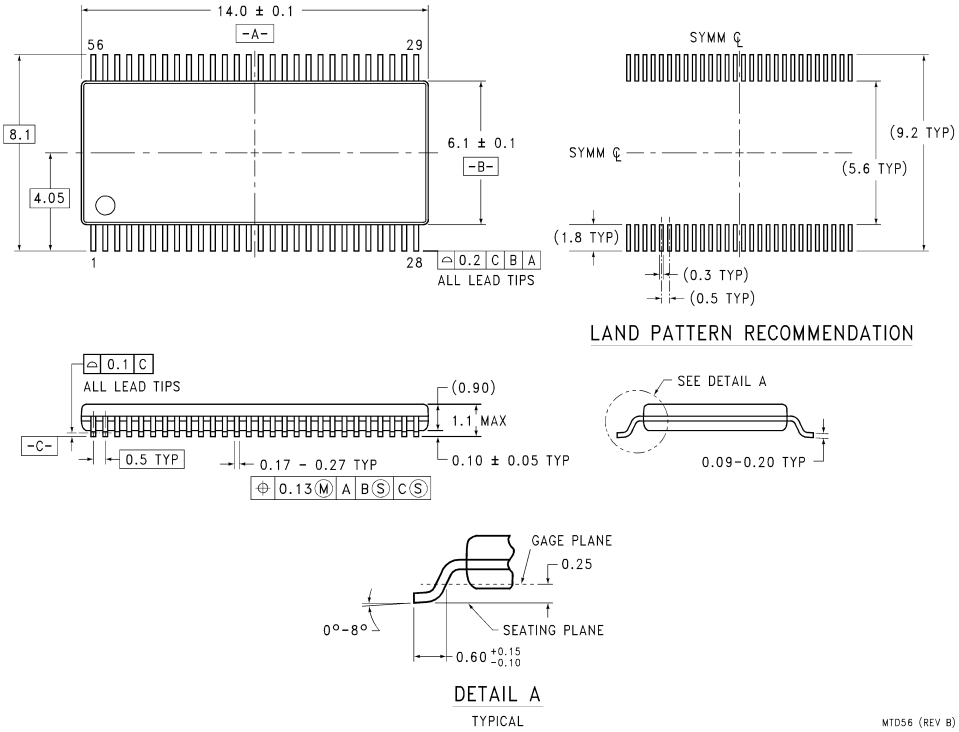

56-Lead Molded Thin Shrink Small Outline Package, JEDEC
Order Number DS90CF583MTD or DS90CF584MTD
NS Package Number MTD56

LIFE SUPPORT POLICY

NATIONAL'S PRODUCTS ARE NOT AUTHORIZED FOR USE AS CRITICAL COMPONENTS IN LIFE SUPPORT DEVICES OR SYSTEMS WITHOUT THE EXPRESS WRITTEN APPROVAL OF THE PRESIDENT OF NATIONAL SEMICONDUCTOR CORPORATION. As used herein:

1. Life support devices or systems are devices or systems which, (a) are intended for surgical implant into the body, or (b) support or sustain life, and whose failure to perform when properly used in accordance with instructions for use provided in the labeling, can be reasonably expected to result in a significant injury to the user.
2. A critical component in any component of a life support device or system whose failure to perform can be reasonably expected to cause the failure of the life support device or system, or to affect its safety or effectiveness.

National Semiconductor Corporation
Americas
Tel: 1-800-272-9959
Fax: 1-800-737-7018
Email: support@nsc.com

www.national.com

National Semiconductor Europe
Fax: +49 (0) 1 80-530 85 86
Email: europe.support@nsc.com
Deutsch Tel: +49 (0) 1 80-530 85 85
English Tel: +49 (0) 1 80-532 78 32
Français Tel: +49 (0) 1 80-532 93 58
Italiano Tel: +49 (0) 1 80-534 16 80

National Semiconductor Asia Pacific Customer Response Group
Tel: 65-2544466
Fax: 65-2504466
Email: sea.support@nsc.com

National Semiconductor Japan Ltd.
Tel: 81-3-5620-6175
Fax: 81-3-5620-6179

National does not assume any responsibility for use of any circuitry described, no circuit patent licenses are implied and National reserves the right at any time without notice to change said circuitry and specifications.