查询MJE5730供应商
捷多邦，专业PCB打样工厂，24小时加急出货

MJE5730
MJE5731
MJE5731A

High Voltage PNP Silicon Power Transistors

. . . designed for line operated audio output amplifier, SWITCHMODE power supply drivers and other switching applications.

- 300 V to 400 V (Min) — $V_{CEO(sus)}$
- 1.0 A Rated Collector Current
- Popular TO–220 Plastic Package
- PNP Complements to the TIP47 thru TIP50 Series

1.0 AMPERE
POWER TRANSISTORS
PNP SILICON
300 – 350 – 400 VOLTS
40 WATTS

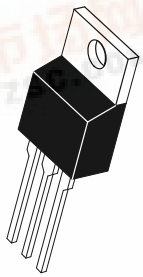

CASE 221A–06
TO–220AB

MAXIMUM RATINGS

Rating	Symbol	MJE5730	MJE5731	MJE5731A	Unit
Collector–Emitter Voltage	V_{CEO}	300	350	400	Vdc
Collector–Base Voltage	V_{CB}	300	350	400	Vdc
Emitter–Base Voltage	V_{EB}	5.0			Vdc
Collector Current — Continuous Peak	I_C	1.0 3.0			Adc
Base Current	I_B	1.0			Adc
Total Power Dissipation @ T_C = 25°C Derate above 25°C	P_D	40 0.32			Watts W/°C
Total Power Dissipation @ T_A = 25°C Derate above 25°C	P_D	2.0 0.016			Watts W/°C
Unclamped Inducting Load Energy (See Figure 10)	E	20			mJ
Operating and Storage Junction Temperature Range	T_J, T_{stg}	–65 to +150			°C

THERMAL CHARACTERISTICS

Characteristic	Symbol	Max	Unit
Thermal Resistance, Junction to Case	$R_{\theta JC}$	3.125	°C/W
Thermal Resistance, Junction to Ambient	$R_{\theta JA}$	62.5	°C/W

找PDF 维库一下 pdf.dzsc.com

ELECTRICAL CHARACTERISTICS (T_C = 25°C unless otherwise noted)

Characteristic	Symbol	Min	Max	Unit
OFF CHARACTERISTICS				
Collector–Emitter Sustaining Voltage (1) (I_C = 30 mAdc, I_B = 0) MJE5730 / MJE5731 / MJE5732	$V_{CEO(sus)}$	300 / 350 / 400	— / — / —	Vdc
Collector Cutoff Current (V_{CE} = 200 Vdc, I_B = 0) MJE5730; (V_{CE} = 250 Vdc, I_B = 0) MJE5731; (V_{CE} = 300 Vdc, I_B = 0) MJE5732	I_{CEO}	— / — / —	1.0 / 1.0 / 1.0	mAdc
Collector Cutoff Current (V_{CE} = 300 Vdc, V_{BE} = 0) MJE5730; (V_{CE} = 350 Vdc, V_{BE} = 0) MJE5731; (V_{CE} = 400 Vdc, V_{BE} = 0) MJE5732	I_{CES}	— / — / —	1.0 / 1.0 / 1.0	mAdc
Emitter Cutoff Current (V_{BE} = 5.0 Vdc, I_C = 0)	I_{EBO}	—	1.0	mAdc
ON CHARACTERISTICS (1)				
DC Current Gain (I_C = 0.3 Adc, V_{CE} = 10 Vdc); (I_C = 1.0 Adc, V_{CE} = 10 Vdc)	h_{FE}	30 / 10	150 / —	—
Collector–Emitter Saturation Voltage (I_C = 1.0 Adc, I_B = 0.2 Adc)	$V_{CE(sat)}$	—	1.0	Vdc
Base–Emitter On Voltage (I_C = 1.0 Adc, V_{CE} = 10 Vdc)	$V_{BE(on)}$	—	1.5	Vdc
DYNAMIC CHARACTERISTICS				
Current Gain — Bandwidth Product (I_C = 0.2 Adc, V_{CE} = 10 Vdc, f = 2.0 MHz)	f_T	10	—	MHz
Small–Signal Current Gain (I_C = 0.2 Adc, V_{CE} = 10 Vdc, f = 1.0 kHz)	h_{fe}	25	—	—

(1) Pulse Test: Pulse Width ≤ 300 μs, Duty Cycle ≤ 2.0%.

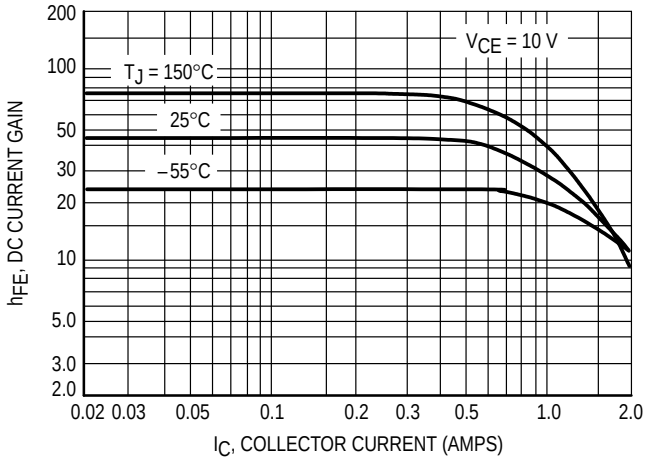

Figure 1. DC Current Gain

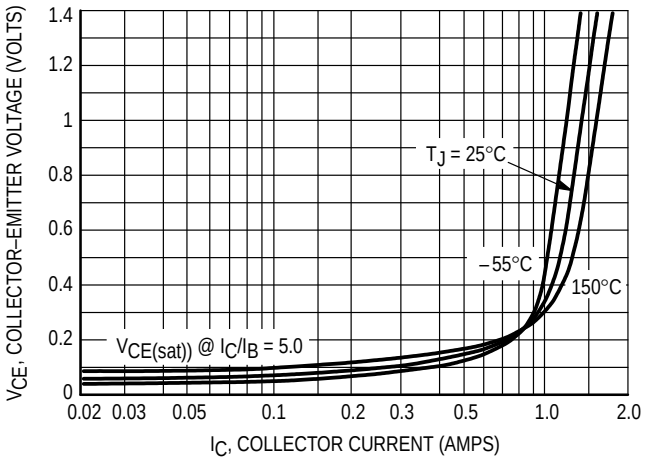

Figure 2. Collector–Emitter Saturation Voltage

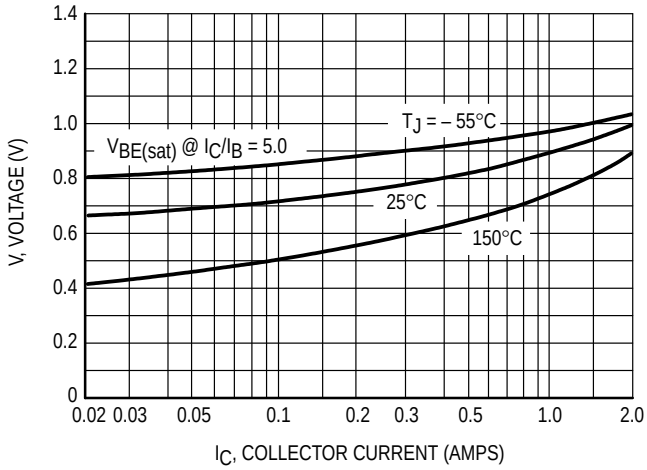

Figure 3. Base–Emitter Voltage

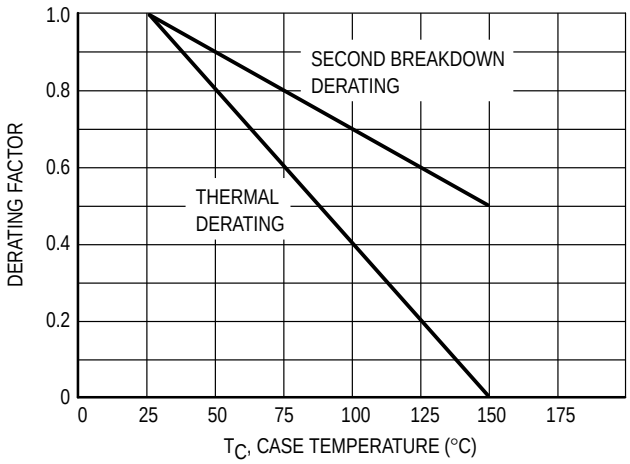

Figure 4. Normalized Power Derating

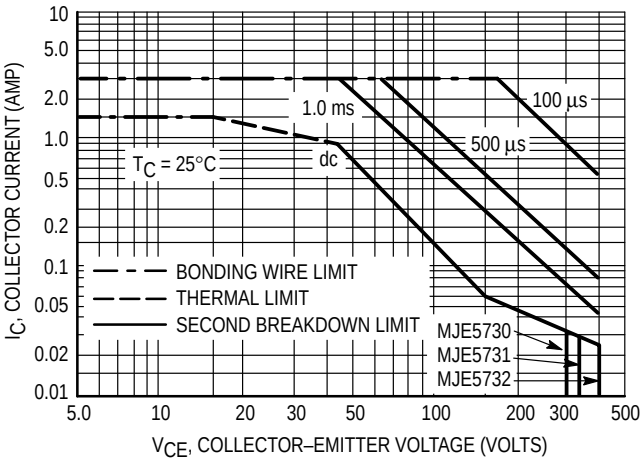

Figure 5. Forward Bias Safe Operating Area

There are two limitations on the power handling ability of a transistor: average junction temperature and second breakdown. Safe operating area curves indicate $I_C - V_{CE}$ limits of the transistor that must be observed for reliable operation; i.e., the transistor must not be subjected to greater dissipation than the curves indicate.

The data of Figure 5 is based on $T_{J(pk)}$ = 150°C; T_C is variable depending on conditions. Second breakdown pulse limits are valid for duty cycles to 10% provided $T_{J(pk)} \leq$ 150°C. $T_{J(pk)}$ may be calculated from the data in Figure 6. At high case temperatures, thermal limitations will reduce the power that can be handled to values less than the limitations imposed by second breakdown.

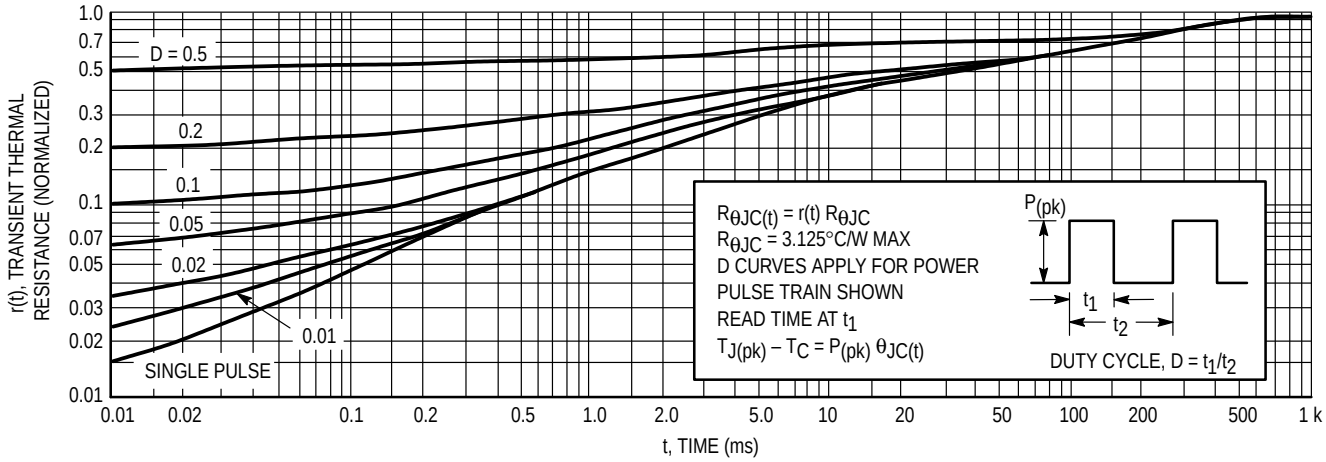

Figure 6. Thermal Response

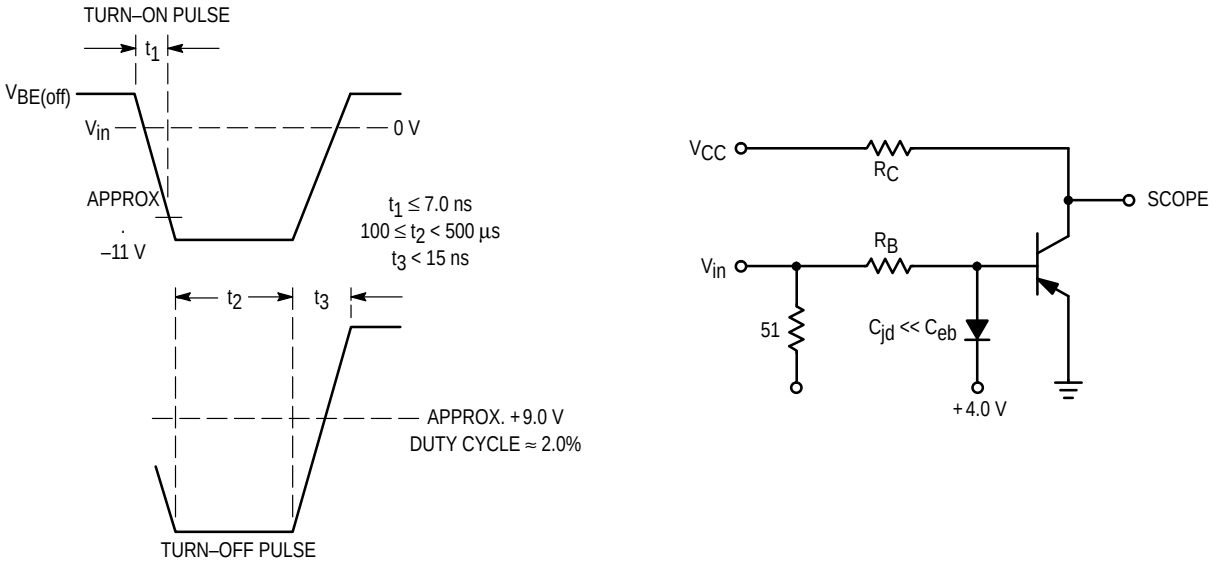

Figure 7. Switching Time Equivalent Circuit

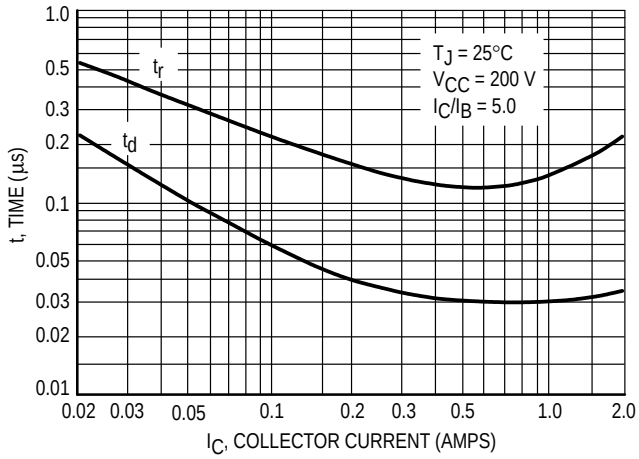

Figure 8. Turn–On Resistive Switching Times

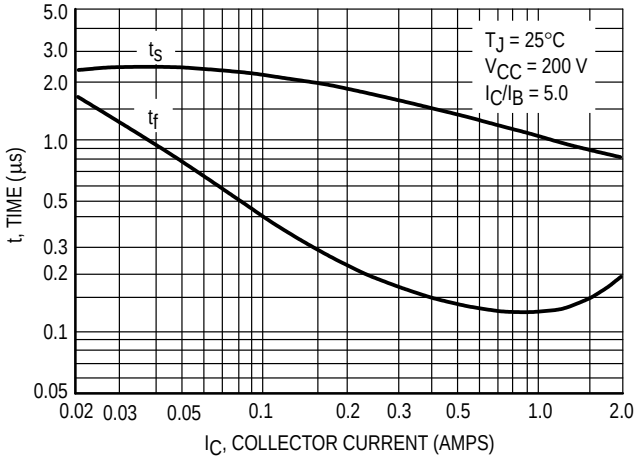

Figure 9. Resistive Turn–Off Switching Times

Test Circuit

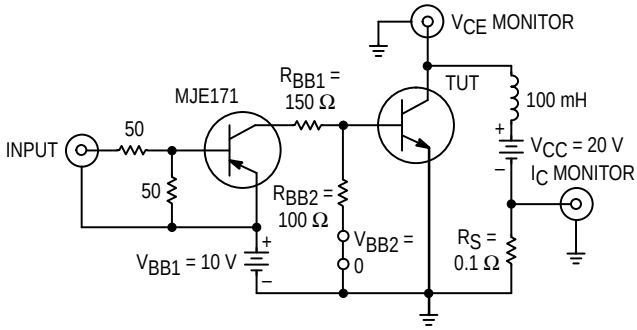

Voltage and Current Waveforms

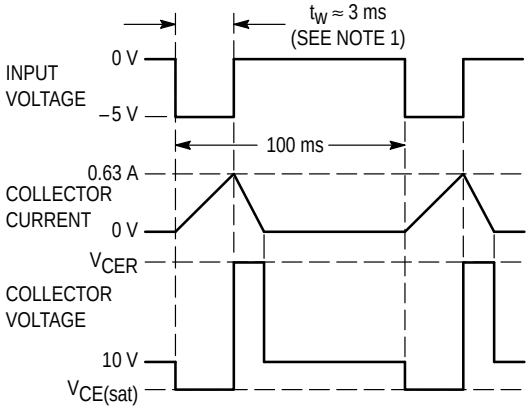

Figure 10. Inductive Load Switching

PACKAGE DIMENSIONS

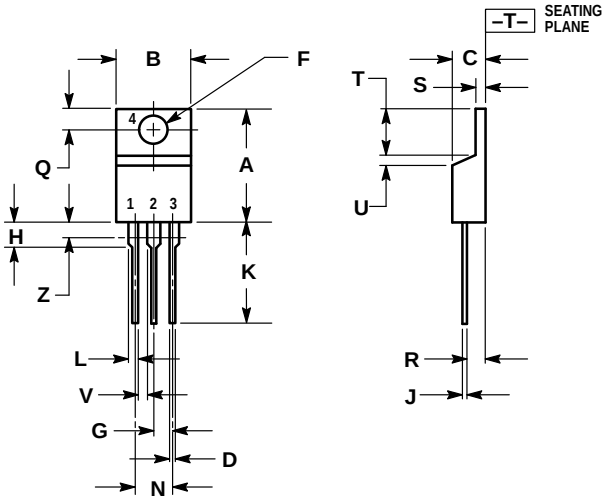

NOTES:
1. DIMENSIONING AND TOLERANCING PER ANSI Y14.5M, 1982.
2. CONTROLLING DIMENSION: INCH.
3. DIMENSION Z DEFINES A ZONE WHERE ALL BODY AND LEAD IRREGULARITIES ARE ALLOWED.

	INCHES		MILLIMETERS	
DIM	MIN	MAX	MIN	MAX
A	0.570	0.620	14.48	15.75
B	0.380	0.405	9.66	10.28
C	0.160	0.190	4.07	4.82
D	0.025	0.035	0.64	0.88
F	0.142	0.147	3.61	3.73
G	0.095	0.105	2.42	2.66
H	0.110	0.155	2.80	3.93
J	0.018	0.025	0.46	0.64
K	0.500	0.562	12.70	14.27
L	0.045	0.060	1.15	1.52
N	0.190	0.210	4.83	5.33
Q	0.100	0.120	2.54	3.04
R	0.080	0.110	2.04	2.79
S	0.045	0.055	1.15	1.39
T	0.235	0.255	5.97	6.47
U	0.000	0.050	0.00	1.27
V	0.045	—	1.15	—
Z	—	0.080	—	2.04

STYLE 1:
PIN 1. BASE
2. COLLECTOR
3. EMITTER
4. COLLECTOR

CASE 221A–06
TO–220AB
ISSUE Y

Motorola reserves the right to make changes without further notice to any products herein. Motorola makes no warranty, representation or guarantee regarding the suitability of its products for any particular purpose, nor does Motorola assume any liability arising out of the application or use of any product or circuit, and specifically disclaims any and all liability, including without limitation consequential or incidental damages. “Typical” parameters can and do vary in different applications. All operating parameters, including “Typicals” must be validated for each customer application by customer’s technical experts. Motorola does not convey any license under its patent rights nor the rights of others. Motorola products are not designed, intended, or authorized for use as components in systems intended for surgical implant into the body, or other applications intended to support or sustain life, or for any other application in which the failure of the Motorola product could create a situation where personal injury or death may occur. Should Buyer purchase or use Motorola products for any such unintended or unauthorized application, Buyer shall indemnify and hold Motorola and its officers, employees, subsidiaries, affiliates, and distributors harmless against all claims, costs, damages, and expenses, and reasonable attorney fees arising out of, directly or indirectly, any claim of personal injury or death associated with such unintended or unauthorized use, even if such claim alleges that Motorola was negligent regarding the design or manufacture of the part. Motorola and Ⓜ are registered trademarks of Motorola, Inc. Motorola, Inc. is an Equal Opportunity/Affirmative Action Employer.

How to reach us:
USA / EUROPE: Motorola Literature Distribution;
P.O. Box 20912; Phoenix, Arizona 85036. 1–800–441–2447

MFAX: RMFAX0@email.sps.mot.com – TOUCHTONE (602) 244–6609
INTERNET: http://Design–NET.com

JAPAN: Nippon Motorola Ltd.; Tatsumi–SPD–JLDC, Toshikatsu Otsuki,
6F Seibu–Butsuryu–Center, 3–14–2 Tatsumi Koto–Ku, Tokyo 135, Japan. 03–3521–8315

HONG KONG: Motorola Semiconductors H.K. Ltd.; 8B Tai Ping Industrial Park,
51 Ting Kok Road, Tai Po, N.T., Hong Kong. 852–26629298