查询EDS1216AATA供应商

ELPIDA

DATA SHEET

128M bits SDRAM

EDS1216AATA (8M words × 16 bits)

Description

The EDS1216AATA is a 128M bits SDRAM organized as 2,097,152 words × 16 bits × 4 banks. All inputs and outputs are synchronized with the positive edge of the clock.

It is packaged in 54-pin plastic TSOP (II).

Features

- 3.3V power supply
- Clock frequency: 133MHz (max.)
- Single pulsed /RAS
- ×16 organization
- 4 banks can operate simultaneously and independently
- Burst read/write operation and burst read/single write operation capability
- Programmable burst length (BL): 1, 2, 4, 8, full page
- 2 variations of burst sequence
  - Sequential (BL = 1, 2, 4, 8, full page)
  - Interleave (BL = 1, 2, 4, 8)
- Programmable /CAS latency (CL): 2, 3
- Byte control by UDQM and LDQM
- Refresh cycles: 4096 refresh cycles/64ms
- 2 variations of refresh
  - Auto refresh
  - Self refresh
- TSOP (II) package with lead free solder (Sn-Bi)

Pin Configurations

/xxx indicate active low signal.

54-pin Plastic TSOP (II)

VDD	1 ○	54	VSS
DQ0	2	53	DQ15
VDDQ	3	52	VSSQ
DQ1	4	51	DQ14
DQ2	5	50	DQ13
VSSQ	6	49	VDDQ
DQ3	7	48	DQ12
DQ4	8	47	DQ11
VDDQ	9	46	VSSQ
DQ5	10	45	DQ10
DQ6	11	44	DQ9
VSSQ	12	43	VDDQ
DQ7	13	42	DQ8
VDD	14	41	VSS
LDQM	15	40	NC
/WE	16	39	UDQM
/CAS	17	38	CLK
/RAS	18	37	CKE
/CS	19	36	NC
BA0	20	35	A11
BA1	21	34	A9
A10	22	33	A8
A0	23	32	A7
A1	24	31	A6
A2	25	30	A5
A3	26	29	A4
VDD	27	28	VSS

(Top view)

A0 to A11	Address input
BA0, BA1	Bank select address
DQ0 to DQ15	Data-input/output
/CS	Chip select
/RAS	Row address strobe
/CAS	Column address strobe
/WE	Write enable
LDQM, UDQM	Input/output mask
CKE	Clock enable
CLK	Clock input
VDD	Power for internal circuit
VSS	Ground for internal circuit
VDDQ	Power for DQ circuit
VSSQ	Ground for DQ circuit
NC	No connection

Document No. E0411E40 (Ver. 4.0)
Date Published February 2005 (K) Japan
Printed in Japan
URL: http://www.elpida.com

©Elpida Memory, Inc. 2003-2005

Ordering Information

Part number	Supply voltage	Organization (words × bits)	Internal Banks	Clock frequency MHz (max.)	/CAS latency	Package
EDS1216AATA-75-E*	3.3V	8M × 16	4	133	3	54-pin plastic TSOP (II)

Note: 100MHz operation at /CAS latency = 2.

Part Number

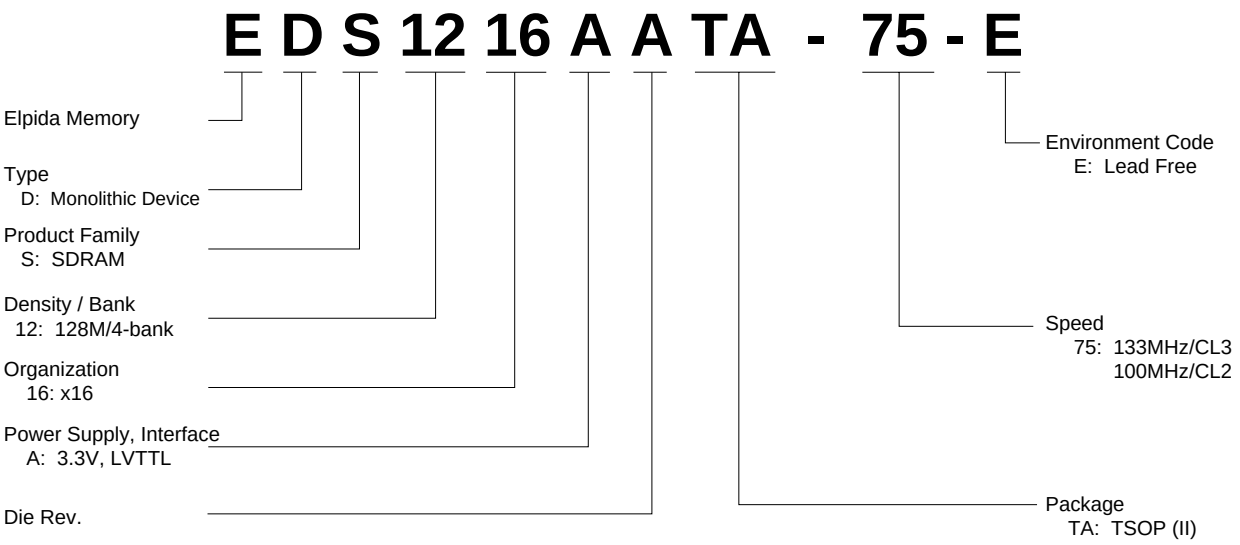

CONTENTS

Description....1
Features....1
Pin Configurations....1
Ordering Information....2
Part Number....2
Electrical Specifications....4
Block Diagram....10
Pin Function....11
Command Operation....12
Simplified State Diagram....20
Mode Register Configuration....21
Power-up sequence....23
Operation of the SDRAM....24
Timing Waveforms....40
Package Drawing....46
Recommended Soldering Conditions....47

Electrical Specifications

- All voltages are referenced to VSS (GND).
- After power up, execute power up sequence and initialization sequence before proper device operation is achieved (refer to the Power up sequence).

Absolute Maximum Ratings

Parameter	Symbol	Rating	Unit	Note
Voltage on any pin relative to VSS	VT	–0.5 to VDD + 0.5 (≤ 4.6 (max.))	V	
Supply voltage relative to VSS]	VDD	–0.5 to +4.6	V	
Short circuit output current	IOS	50	mA	
Power dissipation	PD	1.0	W	
Operating ambient temperature	TA	0 to +70	°C	
Storage temperature	Tstg	–55 to +125	°C	

Caution

Exposing the device to stress above those listed in Absolute Maximum Ratings could cause permanent damage. The device is not meant to be operated under conditions outside the limits described in the operational section of this specification. Exposure to Absolute Maximum Rating conditions for extended periods may affect device reliability.

Recommended DC Operating Conditions (TA = 0 to +70°C)

Parameter	Symbol	min.	max.	Unit	Notes
Supply voltage	VDD, VDDQ	3.0	3.6	V	1
	VSS, VSSQ	0	0	V	2
Input high voltage	VIH	2.0	VDD + 0.3	V	3
Input low voltage	VIL	–0.3	0.8	V	4

Notes: 1. The supply voltage with all VDD and VDDQ pins must be on the same level.
2. The supply voltage with all VSS and VSSQ pins must be on the same level.
3. VIH (max.) = VDD + 1.5V (pulse width ≤ 5ns).
4. VIL (min.) = VSS – 1.5V (pulse width ≤ 5ns).

DC Characteristics 1 (TA = 0 to +70°C, VDD, VDDQ = 3.3V ± 0.3V, VSS, VSSQ = 0V)

Parameter	Symbol	Grade	max.	Unit	Test condition	Notes
Operating current	IDD1		100	mA	Burst length = 1 tRC = tRC (min.)	1, 2, 3
Standby current in power down	IDD2P		3	mA	CKE = VIL, tCK = tCK (min.)	6
Standby current in power down (input signal stable)	IDD2PS		2	mA	CKE = VIL, tCK = ∞	7
Standby current in non power down	IDD2N		20	mA	CKE, /CS = VIH, tCK = tCK (min.)	4
Standby current in non power down (input signal stable)	IDD2NS		9	mA	CKE = VIH, tCK = ∞, /CS = VIH	8
Active standby current in power down	IDD3P		4	mA	CKE = VIL, tCK = tCK (min.)	1, 2, 6
Active standby current in power down (input signal stable)	IDD3PS		3	mA	CKE = VIL, tCK = ∞	2, 7
Active standby current in non power down	IDD3N		40	mA	CKE, /CS = VIH, tCK = tCK (min.)	1, 2, 4
Active standby current in non power down (input signal stable)	IDD3NS		25	mA	CKE = VIH, tCK = ∞, /CS = VIH	2, 8
Burst operating current	IDD4		120	mA	tCK = tCK (min.), BL = 4	1, 2, 5
Refresh current	IDD5		220	mA	tRC = tRC (min.)	3
Self refresh current	IDD6		1.5	mA	VIH ≥ VDD – 0.2V VIL ≤ 0.2V	

Notes: 1. IDD depends on output load condition when the device is selected. IDD (max.) is specified at the output open condition.
2. One bank operation.
3. Input signals are changed once per one clock.
4. Input signals are changed once per two clocks.
5. Input signals are changed once per four clocks.
6. After power down mode, CLK operating current.
7. After power down mode, no CLK operating current.
8. Input signals are VIH or VIL fixed.

DC Characteristics 2 (TA = 0 to +70°C, VDD, VDDQ = 3.3V ± 0.3V, VSS, VSSQ = 0V)

Parameter	Symbol	min.	max.	Unit	Test condition	Notes
Input leakage current	ILI	–1	1	µA	0 ≤ VIN ≤ VDD	
Output leakage current	ILO	–1.5	1.5	µA	0 ≤ VOUT ≤ VDD, DQ = disable	
Output high voltage	VOH	2.4	—	V	IOH = –2 mA	
Output low voltage	VOL	—	0.4	V	IOL = 2 mA	

Pin Capacitance (TA = 25°C, VDD, VDDQ = 3.3V ± 0.3V)

Parameter	Symbol	Pins	min.	typ.	max.	Unit	Notes
Input capacitance	CI1	CLK	2.5	—	3.5	pF	1, 2, 4
	CI2	Address, CKE, /CS, /RAS, /CAS, /WE, DQM	2.5	—	3.8	pF	1, 2, 4
Data input/output capacitance	CI/O	DQ	4	—	6.5	pF	1, 2, 3, 4

Notes: 1. Capacitance measured with Boonton Meter or effective capacitance measuring method.
2. Measurement condition: f = 1MHz, 1.4V bias, 200mV swing.
3. DQM = VIH to disable DOUT.
4. This parameter is sampled and not 100% tested.

AC Characteristics (TA = 0 to +70°C, VDD, VDDQ = 3.3V ± 0.3V, VSS, VSSQ = 0V)

		-75			
Parameter	Symbol	min.	max.	Unit	Notes
System clock cycle time (CL = 2)	tCK	10	—	ns	1
(CL = 3)	tCK	7.5	—	ns	1
CLK high pulse width	tCH	2.5	—	ns	1
CLK low pulse width	tCL	2.5	—	ns	1
Access time from CLK (CL = 2)	tAC	—	6	ns	1, 2
(CL = 3)	tAC	—	5.4		1, 2
Data-out hold time	tOH	2.0	—	ns	1, 2
CLK to Data-out low impedance	tLZ	0	—	ns	1, 2, 3
CLK to Data-out high impedance (CL = 2)	tHZ	—	6	ns	1, 4
(CL = 3)	tHZ	—	5.4	ns	1, 4
Input setup time	tSI	1.5	—	ns	1
Input hold time	tHI	0.8	—	ns	1
Ref/Active to Ref/Active command period	tRC	67.5	—	ns	1
Active to Precharge command period	tRAS	45	120000	ns	1
Active command to column command (same bank)	tRCD	20	—	ns	1
Precharge to active command period	tRP	20	—	ns	1
Write recovery or data-in to precharge lead time	tDPL	15	—	ns	1
Last data into active latency	tDAL	2CLK + 20ns	—		
Active (a) to Active (b) command period	tRRD	15	—	ns	1
Transition time (rise and fall)	tT	0.5	5	ns	
Refresh period (4096 refresh cycles)	tREF	—	64	ms	

Notes: 1. AC measurement assumes tT = 0.5ns. Reference level for timing of input signals is 1.4V.

2. Access time is measured at 1.4V. Load condition is CL = 30pF.
3. tLZ (min.) defines the time at which the outputs achieves the low impedance state.
4. tHZ (max.) defines the time at which the outputs achieves the high impedance state.

Test Conditions

- AC high level voltage/low level input voltage: 2.4V/0.4V
- Input and output timing reference levels: 1.4V
- Input waveform and output load: See following figures

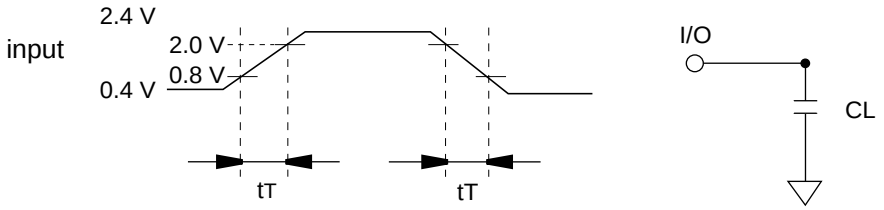

Input waveform and Output load

Relationship Between Frequency and Minimum Latency

Frequency (MHz)		133	100		
tCK (ns)	Symbol	7.5	10	Unit	Notes
Active command to column command (same bank)	*I*RCD	3	2	tCK	1
Active command to active command (same bank)	*I*RC	9	7	tCK	1
Active command to precharge command (same bank)	*I*RAS	6	5	tCK	1
Precharge command to activecommand (same bank)	*I*RP	3	2	tCK	1
Write recovery or data-in to precharge command (same bank)	*I*DPL	2	2	tCK	1
Active command to active command (different bank)	*I*RRD	2	2	tCK	1
Self refresh exit time	*I*SREX	1	1	tCK	2
Last data in to active command (Auto precharge, same bank)	*I*DAL	5	4	tCK	= [*I*DPL + *I*RP]
Self refresh exit to command input	*I*SEC	9	7	tCK	= [*I*RC] 3
Precharge command to high impedance (CL = 2)	*I*HZP	—	2	tCK	
(CL = 3)	*I*HZP	3	3	tCK	
Last data out to active command (Auto precharge, same bank)	*I*APR	1	1	tCK	
Last data out to precharge (early precharge) (CL = 2)	*I*EP	—	–1	tCK	
(CL = 3)	*I*EP	–2	–2	tCK	
Column command to column command	*I*CCD	1	1	tCK	
Write command to data in latency	*I*WCD	0	0	tCK	
DQM to data in	*I*DID	0	0	tCK	
DQM to data out	*I*DOD	2	2	tCK	
CKE to CLK disable	*I*CLE	1	1	tCK	
Register set to active command	*I*MRD	2	2	tCK	
/CS to command disable	*I*CDD	0	0	tCK	
Power down exit to command input	*I*PEC	1	1	tCK	

Notes: 1. *I*RCD to *I*RRD are recommended value.
2. Be valid [DESL] or [NOP] at next command of self refresh exit.
3. Except [DESL] and [NOP]

Block Diagram

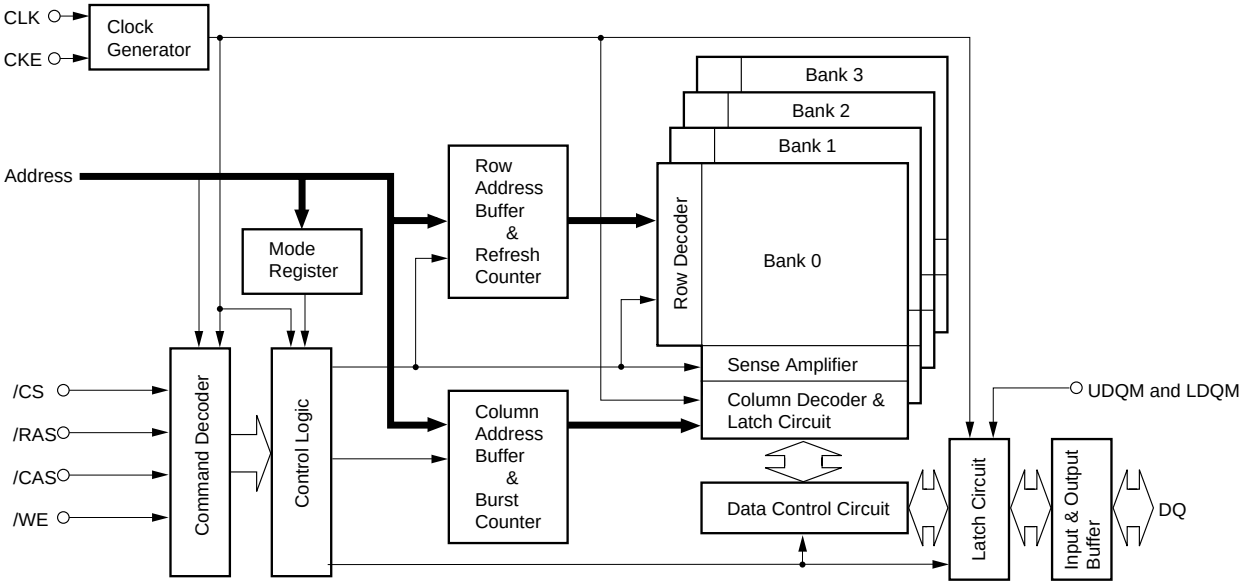

Pin Function

CLK (input pin)

CLK is the master clock input. Other inputs signals are referenced to the CLK rising edge.

CKE (input pins)

CKE determine validity of the next CLK (clock). If CKE is high, the next CLK rising edge is valid; otherwise it is invalid. If the CLK rising edge is invalid, the internal clock is not issued and the Synchronous DRAM suspends operation.

When the Synchronous DRAM is not in burst mode and CKE is negated, the device enters power down mode. During power down mode, CKE must remain low.

/CS (input pins)

/CS low starts the command input cycle. When /CS is high, commands are ignored but operations continue.

/RAS, /CAS, and /WE (input pins)

/RAS, /CAS and /WE have the same symbols on conventional DRAM but different functions. For details, refer to the command table.

A0 to A11 (input pins)

Row Address is determined by A0 to A11 at the CLK (clock) rising edge in the active command cycle.

Column Address is determined by A0 to A8 at the CLK rising edge in the read or write command cycle.

A10 defines the precharge mode. When A10 is high in the precharge command cycle, all banks are precharged; when A10 is low, only the bank selected by BA0 and BA1 is precharged.

When A10 is high in read or write command cycle, the precharge starts automatically after the burst access.

BA0 and BA1 (input pin)

BA0 and BA1 are bank select signal. (See Bank Select Signal Table)

[Bank Select Signal Table]

	BA0	BA1
Bank 0	L	L
Bank 1	H	L
Bank 2	L	H
Bank 3	H	H

Remark: H: VIH. L: VIL.

UDQM and LDQM (input pins)

UDQM and LDQM control input/output buffers. UDQM and LDQM control upper byte (DQ8 to DQ15) and lower byte (DQ0 to DQ7).

DQ0 to DQ15 (input/output pins)

DQ pins have the same function as I/O pins on a conventional DRAM.

VDD, VSS, VDDQ, VSSQ (Power supply)

VDD and VSS are power supply pins for internal circuits. VDDQ and VSSQ are power supply pins for the output buffers.

Command Operation

Command Truth Table

The SDRAM recognizes the following commands specified by the /CS, /RAS, /CAS, /WE and address pins.

		CKE									
Function	Symbol	n – 1	n	/CS	/RAS	/CAS	/WE	BA1	BA0	A10	A0 to A11
Device deselect	DESL	H	×	H	×	×	×	×	×	×	×
No operation	NOP	H	×	L	H	H	H	×	×	×	×
Burst stop	BST	H	×	L	H	H	L	×	×	×	×
Read	READ	H	×	L	H	L	H	V	V	L	V
Read with auto precharge	READA	H	×	L	H	L	H	V	V	H	V
Write	WRIT	H	×	L	H	L	L	V	V	L	V
Write with auto precharge	WRITA	H	×	L	H	L	L	V	V	H	V
Bank activate	ACT	H	×	L	L	H	H	V	V	V	V
Precharge select bank	PRE	H	×	L	L	H	L	V	V	L	×
Precharge all banks	PALL	H	×	L	L	H	L	×	×	H	×
Mode register set	MRS	H	×	L	L	L	L	L	L	L	V

Remark: H: VIH. L: VIL. ×: VIH or VIL. V: Valid address input.

Device deselect command [DESL]

When this command is set (/CS is High), the SDRAM ignore command input at the clock. However, the internal status is held.

No operation [NOP]

This command is not an execution command. However, the internal operations continue.

Burst stop command [BST]

This command can stop the current burst operation.

Column address strobe and read command [READ]

This command starts a read operation. In addition, the start address of burst read is determined by the column address (see Address Pins Table in Pin Function) and the bank select address (BA0, BA1). After the read operation, the output buffer becomes High-Z.

Read with auto-precharge [READA]

This command automatically performs a precharge operation after a burst read with a burst length of 1, 2, 4 or 8.

Column address strobe and write command [WRIT]

This command starts a write operation. When the burst write mode is selected, the column address (see Address Pins Table in Pin Function) and the bank select address (BA0, BA1) become the burst write start address. When the single write mode is selected, data is only written to the location specified by the column address (see Address Pins Table in Pin Function) and the bank select address (BA0, BA1).

Write with auto-precharge [WRITA]

This command automatically performs a precharge operation after a burst write with a length of 1, 2, 4 or 8, or after a single write operation.

Row address strobe and bank activate [ACT]

This command activates the bank that is selected by BA0, BA1 and determines the row address (A0 to A11). (See Bank Select Signal Table)

Precharge selected bank [PRE]

This command starts precharge operation for the bank selected by BA0, BA1. (See Bank Select Signal Table)

[Bank Select Signal Table]

	BA0	BA1
Bank 0	L	L
Bank 1	H	L
Bank 2	L	H
Bank 3	H	H

Remark: H: VIH. L: VIL.

Precharge all banks [PALL]

This command starts a precharge operation for all banks.

Refresh [REF/SELF]

This command starts the refresh operation. There are two types of refresh operation, the one is auto-refresh, and the other is self-refresh. For details, refer to the CKE truth table section.

Mode register set [MRS]

The SDRAM has a mode register that defines how it operates. The mode register is specified by the address pins (A0 to BA0 and BA1) at the mode register set cycle. For details, refer to the Mode Register Configuration. After power on, the contents of the mode register are undefined, execute the mode register set command to set up the mode register.

DQM Truth Table

Commands	Symbol	CKE		UDQM	LDQM
		n – 1	n		
Upper byte write enable/output enable	ENBU	H	×	L	×
Lower byte write enable/output enable	ENBL	H	×	×	L
Upper byte write inhibit/output disable	MASKU	H	×	H	×
Lower byte write inhibit/output disable	MASKL	H	×	×	H

Remark: H: VIH. L: VIL. ×: VIH or VIL
Write: *t*DID is needed.
Read: *t*DOD is needed.

CKE Truth Table

Current state	Function	Symbol	CKE		/CS	/RAS	/CAS	/WE	Address
			n – 1	n					
Activating	Clock suspend mode entry		H	L	×	×	×	×	×
Any	Clock suspend mode		L	L	×	×	×	×	×
Clock suspend	Clock suspend mode exit		L	H	×	×	×	×	×
Idle	CBR (auto) refresh command	REF	H	H	L	L	L	H	×
Idle	Self refresh entry	SELF	H	L	L	L	L	H	×
Self refresh	Self refresh exit		L	H	L	H	H	H	×
			L	H	H	×	×	×	×
Idle	Power down entry		H	L	L	H	H	H	×
			H	L	H	×	×	×	×
Power down	Power down exit		L	H	H	×	×	×	×
			L	H	L	H	H	H	×

Remark: H: VIH. L: VIL. ×: VIH or VIL

Function Truth Table

The following table shows the operations that are performed when each command is issued in each mode of the SDRAM.

The following table assumes that CKE is high.

Current state	/CS	/RAS	/CAS	/WE	Address	Command	Operation
Precharge	H	×	×	×	×	DESL	Enter IDLE after tRP
	L	H	H	H	×	NOP	Enter IDLE after tRP
	L	H	H	L	×	BST	ILLEGAL
	L	H	L	H	BA, CA, A10	READ/READA	ILLEGAL*3
	L	H	L	L	BA, CA, A10	WRIT/WRITA	ILLEGAL*3
	L	L	H	H	BA, RA	ACT	ILLEGAL*3
	L	L	H	L	BA, A10	PRE, PALL	NOP*5
	L	L	L	H	×	REF, SELF	ILLEGAL
	L	L	L	L	MODE	MRS	ILLEGAL
Idle	H	×	×	×	×	DESL	NOP
	L	H	H	H	×	NOP	NOP
	L	H	H	L	×	BST	ILLEGAL
	L	H	L	H	BA, CA, A10	READ/READA	ILLEGAL*4
	L	H	L	L	BA, CA, A10	WRIT/WRITA	ILLEGAL*4
	L	L	H	H	BA, RA	ACT	Bank and row active
	L	L	H	L	BA, A10	PRE, PALL	NOP
	L	L	L	H	×	REF, SELF	Refresh
	L	L	L	L	MODE	MRS	Mode register set*8
Row active	H	×	×	×	×	DESL	NOP
	L	H	H	H	×	NOP	NOP
	L	H	H	L	×	BST	ILLEGAL
	L	H	L	H	BA, CA, A10	READ/READA	Begin read*6
	L	H	L	L	BA, CA, A10	WRIT/WRITA	Begin write*6
	L	L	H	H	BA, RA	ACT	Other bank active ILLEGAL on same bank*2
	L	L	H	L	BA, A10	PRE, PALL	Precharge*7
	L	L	L	H	×	REF, SELF	ILLEGAL
	L	L	L	L	MODE	MRS	ILLEGAL
Read	H	×	×	×	×	DESL	Continue burst to end
	L	H	H	H	×	NOP	Continue burst to end
	L	H	H	L	×	BST	Burst stop
	L	H	L	H	BA, CA, A10	READ/READA	Continue burst read to /CAS latency and New read
	L	H	L	L	BA, CA, A10	WRIT/WRITA	Term burst read/start write
	L	L	H	H	BA, RA	ACT	Other bank active ILLEGAL on same bank*2
	L	L	H	L	BA, A10	PRE, PALL	Term burst read and Precharge
	L	L	L	H	×	REF, SELF	ILLEGAL
	L	L	L	L	MODE	MRS	ILLEGAL

Current state	/CS	/RAS	/CAS	/WE	Address	Command	Operation
Read with auto-precharge	H	×	×	×	×	DESL	Continue burst to end and precharge
	L	H	H	H	×	NOP	Continue burst to end and precharge
	L	H	H	L	×	BST	ILLEGAL
	L	H	L	H	BA, CA, A10	READ/READA	ILLEGAL*3
	L	H	L	L	BA, CA, A10	WRIT/WRITA	ILLEGAL*3
	L	L	H	H	BA, RA	ACT	Other bank active ILLEGAL on same bank*2
	L	L	H	L	BA, A10	PRE, PALL	ILLEGAL*3
	L	L	L	H	×	REF, SELF	ILLEGAL
	L	L	L	L	MODE	MRS	ILLEGAL
Write	H	×	×	×	×	DESL	Continue burst to end
	L	H	H	H	×	NOP	Continue burst to end
	L	H	H	L	×	BST	Burst stop
	L	H	L	H	BA, CA, A10	READ/READA	Term burst and New read
	L	H	L	L	BA, CA, A10	WRIT/WRITA	Term burst and New write
	L	L	H	H	BA, RA	ACT	Other bank active ILLEGAL on same bank*3
	L	L	H	L	BA, A10	PRE, PALL	Term burst write and Precharge*1
	L	L	L	H	×	REF, SELF	ILLEGAL
	L	L	L	L	MODE	MRS	ILLEGAL
Write with auto-precharge	H	×	×	×	×	DESL	Continue burst to end and precharge
	L	H	H	H	×	NOP	Continue burst to end and precharge
	L	H	H	L	×	BST	ILLEGAL
	L	H	L	H	BA, CA, A10	READ/READA	ILLEGAL*3
	L	H	L	L	BA, CA, A10	WRIT/WRITA	ILLEGAL*3
	L	L	H	H	BA, RA	ACT	Other bank active ILLEGAL on same bank*3
	L	L	H	L	BA, A10	PRE, PALL	ILLEGAL*3
	L	L	L	H	×	REF, SELF	ILLEGAL
	L	L	L	L	MODE	MRS	ILLEGAL
Refresh (auto-refresh)	H	×	×	×	×	DESL	Enter IDLE after tRC
	L	H	H	H	×	NOP	Enter IDLE after tRC
	L	H	H	L	×	BST	ILLEGAL
	L	H	L	H	BA, CA, A10	READ/READA	ILLEGAL*4
	L	H	L	L	BA, CA, A10	WRIT/WRITA	ILLEGAL*4
	L	L	H	H	BA, RA	ACT	ILLEGAL*4
	L	L	H	L	BA, A10	PRE, PALL	ILLEGAL*4
	L	L	L	H	×	REF, SELF	ILLEGAL
	L	L	L	L	MODE	MRS	ILLEGAL

Current state	/CS	/RAS	/CAS	/WE	Address	Command	Operation
Mode register set	H	×	×	×	×	DESL	NOP
	L	H	H	H	×	NOP	NOP
	L	H	H	L	×	BST	ILLEGAL
	L	H	L	H	BA, CA, A10	READ/READA	ILLEGAL*4
	L	H	L	L	BA, CA, A10	WRIT/WRITA	ILLEGAL*4
	L	L	H	H	BA, RA	ACT	Bank and row active*9
	L	L	H	L	BA, A10	PRE, PALL	NOP
	L	L	L	H	×	REF, SELF	Refresh*9
	L	L	L	L	MODE	MRS	Mode register set*8

Remark: H: VIH. L: VIL. ×: VIH or VIL

Notes: 1. An interval of tDPL is required between the final valid data input and the precharge command.
2. If tRRD is not satisfied, this operation is illegal.
3. Illegal for same bank, except for another bank.
4. Illegal for all banks.
5. NOP for same bank, except for another bank.
6. Illegal if tRCD is not satisfied.
7. Illegal if tRAS is not satisfied.
8. MRS command must be issued after DOUT finished, in case of DOUT remaining.
9. Illegal if tMRD is not satisfied.

Command Truth Table for CKE

	CKE								
Current State	n – 1	n	/CS	/RAS	/CAS	/WE	Address	Operation	Notes
Self refresh	H	×	×	×	×	×	×	INVALID, CLK (n – 1) would exit self refresh	
	L	H	H	×	×	×	×	Self refresh recovery	
	L	H	L	H	H	×	×	Self refresh recovery	
	L	H	L	H	L	×	×	ILLEGAL	
	L	H	L	L	×	×	×	ILLEGAL	
	L	L	×	×	×	×	×	Continue self refresh	
Self refresh recovery	H	H	H	×	×	×	×	Idle after t_{RC}	
	H	H	L	H	H	×	×	Idle after t_{RC}	
	H	H	L	H	L	×	×	ILLEGAL	
	H	H	L	L	×	×	×	ILLEGAL	
	H	L	H	×	×	×	×	ILLEGAL	
	H	L	L	H	H	×	×	ILLEGAL	
	H	L	L	H	L	×	×	ILLEGAL	
	H	L	L	L	×	×	×	ILLEGAL	
Power down	H	×	×	×	×	×		INVALID, CLK (n – 1) would exit power down	
	L	H	H	×	×	×	×	EXIT power down	
	L	H	L	H	H	H	×	EXIT power down	
	L	L	×	×	×	×	×	Continue power down mode	
All banks idle	H	H	H	×	×	×		Refer to operations in Function Truth Table	
	H	H	L	H	×	×		Refer to operations in Function Truth Table	
	H	H	L	L	H	×		Refer to operations in Function Truth Table	
	H	H	L	L	L	H	×	CBR (auto) Refresh	
	H	H	L	L	L	L	OPCODE	Refer to operations in Function Truth Table	
	H	L	H	×	×	×		Begin power down next cycle	
	H	L	L	H	×	×		Refer to operations in Function Truth Table	
	H	L	L	L	H	×		Refer to operations in Function Truth Table	
	H	L	L	L	L	H	×	Self refresh	1
	H	L	L	L	L	L	OPCODE	Refer to operations in Function Truth Table	
	L	H	×	×	×	×	×	Exit power down next cycle	
	L	L	×	×	×	×	×	Power down	1
Row active	H	×	×	×	×	×	×	Refer to operations in Function Truth Table	
	L	×	×	×	×	×	×	Clock suspend	1
Any state other than	H	H	×	×	×	×		Refer to operations in Function Truth Table	
listed above	H	L	×	×	×	×	×	Begin clock suspend next cycle	2
	L	H	×	×	×	×	×	Exit clock suspend next cycle	
	L	L	×	×	×	×	×	Maintain clock suspend	

Remark: H: VIH. L: VIL. ×: VIH or VIL

Notes: 1. Self refresh can be entered only from the all banks idle state. Power down can be entered only from all banks idle. Clock suspend can be entered only from following states, row active, read, read with auto-precharge, write and write with auto precharge.

2. Must be legal command as defined in Function Truth Table.

Clock suspend mode entry

The SDRAM enters clock suspend mode from active mode by setting CKE to Low. If command is input in the clock suspend mode entry cycle, the command is valid. The clock suspend mode changes depending on the current status (1 clock before) as shown below.

ACTIVE clock suspend

This suspend mode ignores inputs after the next clock by internally maintaining the bank active status.

READ suspend and READ with Auto-precharge suspend

The data being output is held (and continues to be output).

WRITE suspend and WRIT with Auto-precharge suspend

In this mode, external signals are not accepted. However, the internal state is held.

Clock suspend

During clock suspend mode, keep the CKE to Low.

Clock suspend mode exit

The SDRAM exits from clock suspend mode by setting CKE to High during the clock suspend state.

IDLE

In this state, all banks are not selected, and completed precharge operation.

Auto-refresh command [REF]

When this command is input from the IDLE state, the SDRAM starts auto-refresh operation. (The auto-refresh is the same as the CBR refresh of conventional DRAMs.) During the auto-refresh operation, refresh address and bank select address are generated inside the SDRAM. For every auto-refresh cycle, the internal address counter is updated. Accordingly, 4096 times are required to refresh the entire memory. Before executing the auto-refresh command, all the banks must be in the IDLE state. In addition, since the precharge for all banks is automatically performed after auto-refresh, no precharge command is required after auto-refresh.

Self-refresh entry [SELF]

When this command is input during the IDLE state, the SDRAM starts self-refresh operation. After the execution of this command, self-refresh continues while CKE is Low. Since self-refresh is performed internally and automatically, external refresh operations are unnecessary.

Power down mode entry

When this command is executed during the IDLE state, the SDRAM enters power down mode. In power down mode, power consumption is suppressed by cutting off the initial input circuit.

Self-refresh exit

When this command is executed during self-refresh mode, the SDRAM can exit from self-refresh mode. After exiting from self-refresh mode, the SDRAM enters the IDLE state.

Power down exit

When this command is executed at the power down mode, the SDRAM can exit from power down mode. After exiting from power down mode, the SDRAM enters the IDLE state.

Simplified State Diagram

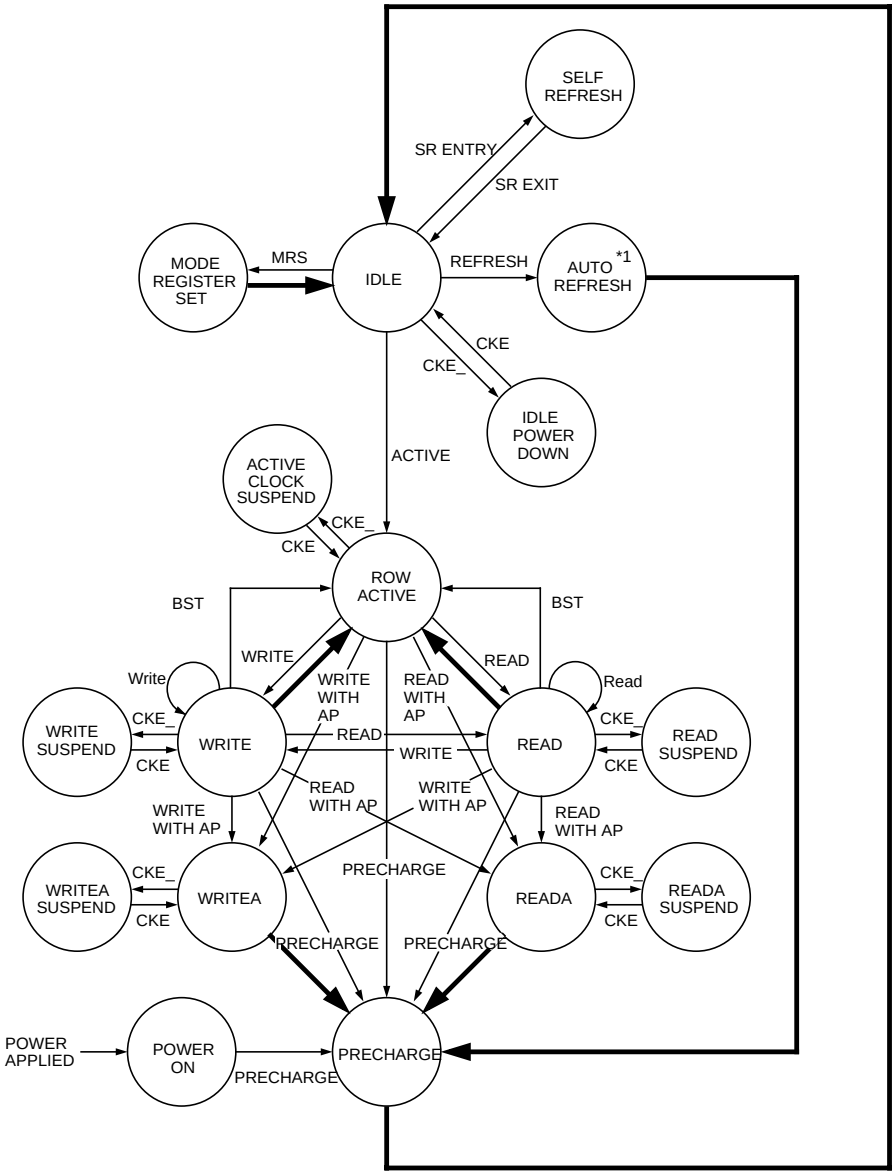

Automatic transition after completion of command.
Transition resulting from command input.

Note: 1. After the auto-refresh operation, precharge operation is performed automatically and enter the IDLE state.

Mode Register Configuration

Mode Register Set

The mode register is set by the input to the address pins (A0 to A11, BA0 and BA1) during mode register set cycles. The mode register consists of five sections, each of which is assigned to address pins.

BA1, BA0, A8, A9, A10, A11: (OPCODE): The SDRAM has two types of write modes. One is the burst write mode, and the other is the single write mode. These bits specify write mode.

Burst read and burst write: Burst write is performed for the specified burst length starting from the column address specified in the write cycle.

Burst read and single write: Data is only written to the column address specified during the write cycle, regardless of the burst length.

A7: Keep this bit Low at the mode register set cycle. If this pin is high, the vender test mode is set.

A6, A5, A4: (LMODE): These pins specify the /CAS latency.

A3: (BT): A burst type is specified.

A2, A1, A0: (BL): These pins specify the burst length.

BA1	BA0	A11	A10	A9	A8	A7	A6	A5	A4	A3	A2	A1	A0
OPCODE						0	LMODE			BT	BL		

A6	A5	A4	CAS latency
0	0	0	R
0	0	1	R
0	1	0	2
0	1	1	3
1	X	X	R

A3	Burst type
0	Sequential
1	Interleave

A2	A1	A0	Burst length	
			BT=0	BT=1
0	0	0	1	1
0	0	1	2	2
0	1	0	4	4
0	1	1	8	8
1	0	0	R	R
1	0	1	R	R
1	1	0	R	R
1	1	1	F.P.	R

BA1	BA0	A11	A10	A9	A8	Write mode
0	0	0	0	0	0	Burst read and burst write
0	0	X	X	0	1	R
0	0	X	X	1	0	Burst read and single write
0	0	X	X	1	1	R
0	1	X	X	X	X	R
1	0	X	X	X	X	R
1	1	X	X	X	X	R

F.P.: Full Page
R is Reserved (inhibit)
X: 0 or 1

Mode Register Set

Burst length = 2

Starting Ad.	Addressing(decimal)	
A0	Sequential	Interleave
0	0, 1,	0, 1,
1	1, 0,	1, 0,

Burst length = 4

Starting Ad.		Addressing(decimal)	
A1	A0	Sequential	Interleave
0	0	0, 1, 2, 3,	0, 1, 2, 3,
0	1	1, 2, 3, 0,	1, 0, 3, 2,
1	0	2, 3, 0, 1,	2, 3, 0, 1,
1	1	3, 0, 1, 2,	3, 2, 1, 0,

Burst length = 8

Starting Ad.			Addressing(decimal)	
A2	A1	A0	Sequential	Interleave
0	0	0	0, 1, 2, 3, 4, 5, 6, 7,	0, 1, 2, 3, 4, 5, 6, 7,
0	0	1	1, 2, 3, 4, 5, 6, 7, 0,	1, 0, 3, 2, 5, 4, 7, 6,
0	1	0	2, 3, 4, 5, 6, 7, 0, 1,	2, 3, 0, 1, 6, 7, 4, 5,
0	1	1	3, 4, 5, 6, 7, 0, 1, 2,	3, 2, 1, 0, 7, 6, 5, 4,
1	0	0	4, 5, 6, 7, 0, 1, 2, 3,	4, 5, 6, 7, 0, 1, 2, 3,
1	0	1	5, 6, 7, 0, 1, 2, 3, 4,	5, 4, 7, 6, 1, 0, 3, 2,
1	1	0	6, 7, 0, 1, 2, 3, 4, 5,	6, 7, 4, 5, 2, 3, 0, 1,
1	1	1	7, 0, 1, 2, 3, 4, 5, 6,	7, 6, 5, 4, 3, 2, 1, 0,

Burst Sequence

Full page burst is available only for sequential addressing. The addressing sequence is started from the column address that is asserted by read/write command. And the address is increased one by one.

It is back to the address 0 when the address reaches at the end of address 511. “Full page burst” stops the burst read/write with burst stop command.

Power-up sequence

Power-up sequence

The SDRAM should be goes on the following sequence with power up.

The CLK, CKE, /CS, DQM and DQ pins keep low till power stabilizes.
The CLK pin is stabilized within 100 µs after power stabilizes before the following initialization sequence.
The CKE and DQM is driven to high between power stabilizes and the initialization sequence.
This SDRAM has VDD clamp diodes for CLK, CKE, address, /RAS, /CAS, /WE, /CS, DQM and DQ pins. If these pins go high before power up, the large current flows from these pins to VDD through the diodes.

Initialization sequence

When 200 µs or more has past after the above power-up sequence, all banks must be precharged using the precharge command (PALL). After tRP delay, set 8 or more auto refresh commands (REF). Set the mode register set command (MRS) to initialize the mode register. We recommend that by keeping DQM and CKE to High, the output buffer becomes High-Z during Initialization sequence, to avoid DQ bus contention on memory system formed with a number of device.

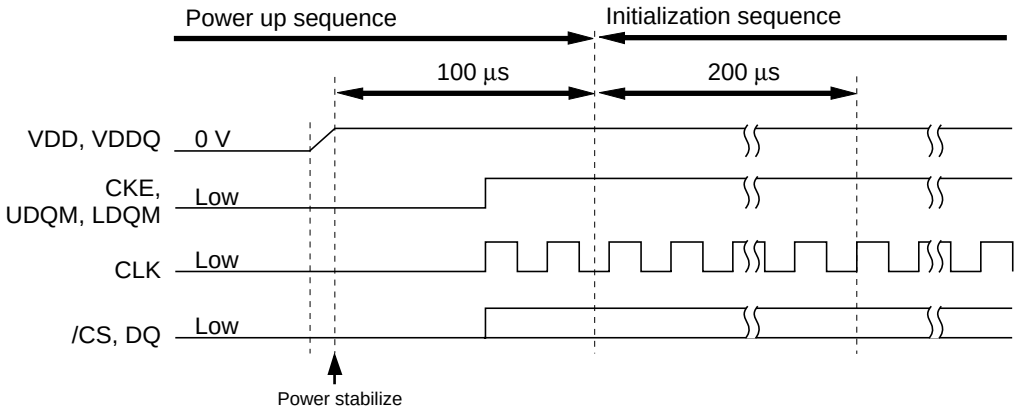

Power-up sequence and Initialization sequence

Operation of the SDRAM

Read/Write Operations

Bank active

Before executing a read or write operation, the corresponding bank and the row address must be activated by the bank active (ACT) command. An interval of tRCD is required between the bank active command input and the following read/write command input.

Read operation

A read operation starts when a read command is input. Output buffer becomes Low-Z in the (/CAS Latency - 1) cycle after read command set. The SDRAM can perform a burst read operation.

The burst length can be set to 1, 2, 4 and 8. The start address for a burst read is specified by the column address and the bank select address at the read command set cycle. In a read operation, data output starts after the number of clocks specified by the /CAS Latency. The /CAS Latency can be set to 2 or 3.

When the burst length is 1, 2, 4 and 8 the DOUT buffer automatically becomes High-Z at the next clock after the successive burst-length data has been output.

The /CAS latency and burst length must be specified at the mode register.

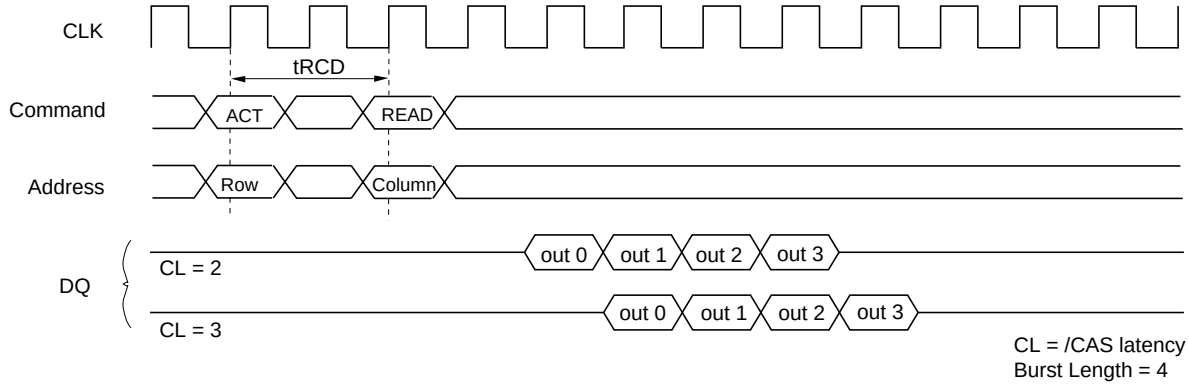

/CAS Latency

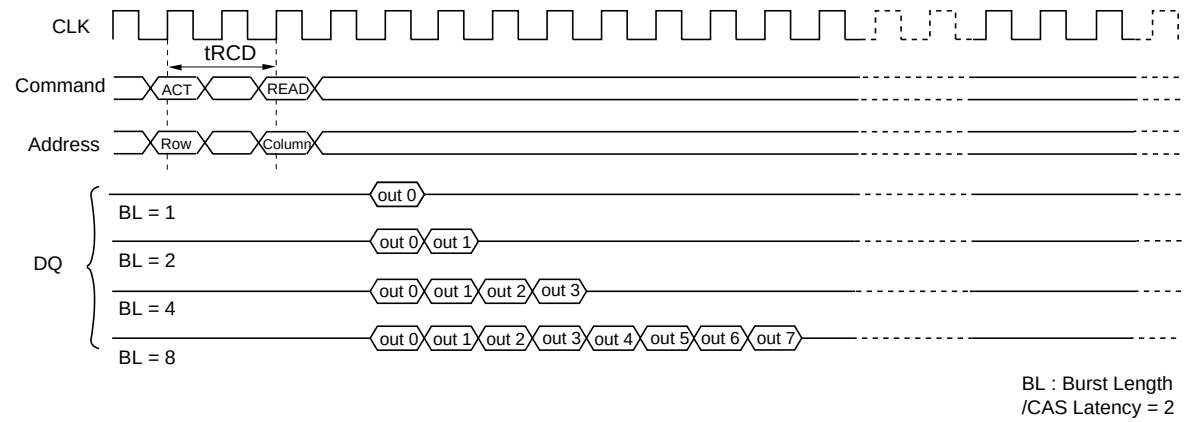

Burst Length

Write operation

Burst write or single write mode is selected by the OPCODE of the mode register.

1. Burst write: A burst write operation is enabled by setting OPCODE (A9, A8) to (0, 0). A burst write starts in the same clock as a write command set. (The latency of data input is 0 clock.) The burst length can be set to 1, 2, 4 and 8, like burst read operations. The write start address is specified by the column address and the bank select address at the write command set cycle.

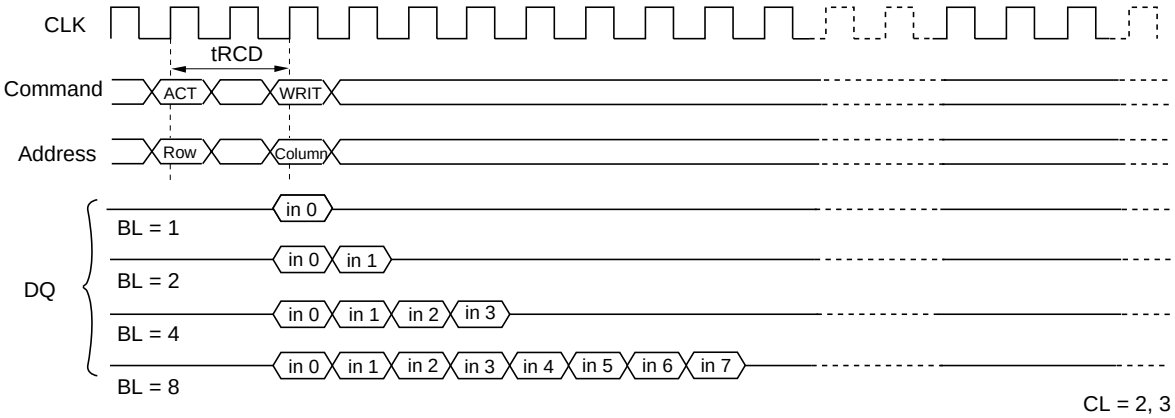

Burst write

2. Single write: A single write operation is enabled by setting OPCODE (A9, A8) to (1, 0). In a single write operation, data is only written to the column address and the bank select address specified by the write command set cycle without regard to the burst length setting. (The latency of data input is 0 clock).

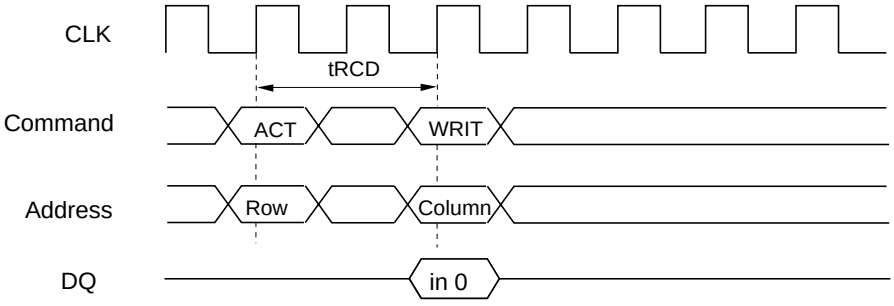

Single write

Auto Precharge

Read with auto-precharge

In this operation, since precharge is automatically performed after completing a read operation, a precharge command need not be executed after each read operation. The command executed for the same bank after the execution of this command must be the bank active (ACT) command. In addition, an interval defined by *l*APR is required before execution of the next command.

[Clock cycle time]

/CAS latency	Precharge start cycle
3	2 cycle before the final data is output
2	1 cycle before the final data is output

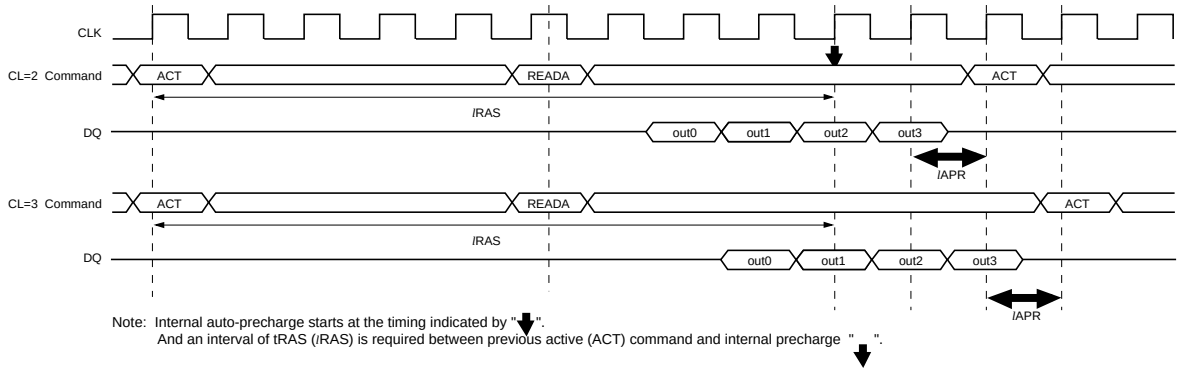

Burst Read (BL = 4)

Write with auto-precharge

In this operation, since precharge is automatically performed after completing a burst write or single write operation, a precharge command need not be executed after each write operation. The command executed for the same bank after the execution of this command must be the bank active (ACT) command. In addition, an interval of *l*DAL is required between the final valid data input and input of next command.

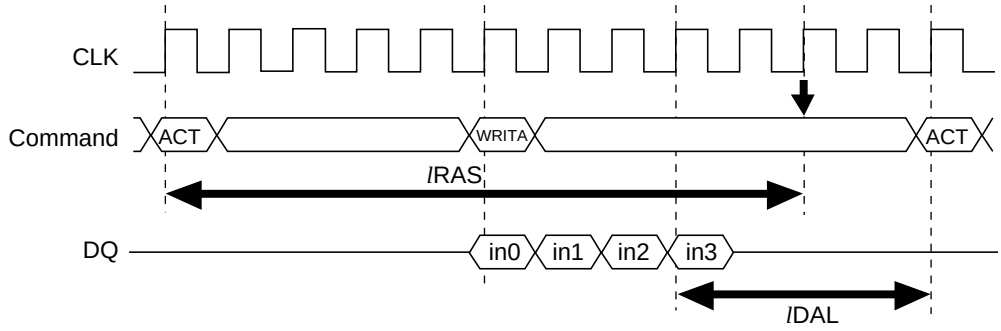

Note: Internal auto-precharge starts at the timing indicated by "↓".
and an interval of tRAS (*l*RAS) is required between previous active (ACT) command and internal precharge "↓".

Burst Write (BL = 4)

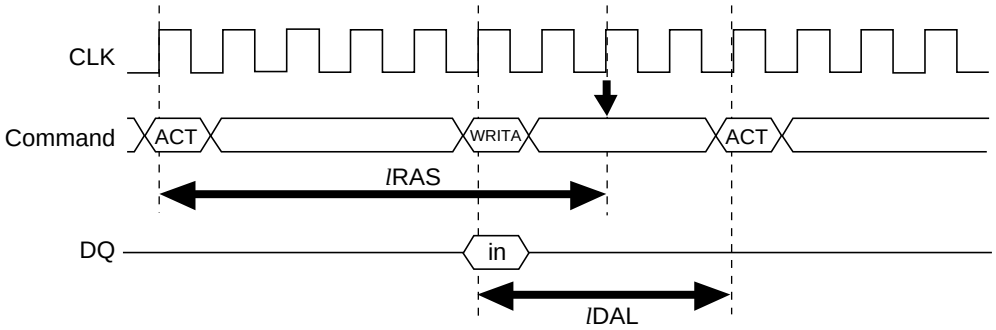

Note: Internal auto-precharge starts at the timing indicated by "↓".
and an interval of tRAS (*l*RAS) is required between previous active (ACT) command and internal precharge "↓".

Single Write

Burst Stop Command

During a read cycle, when the burst stop command is issued, the burst read data are terminated and the data bus goes to High-Z after the /CAS latency from the burst stop command.

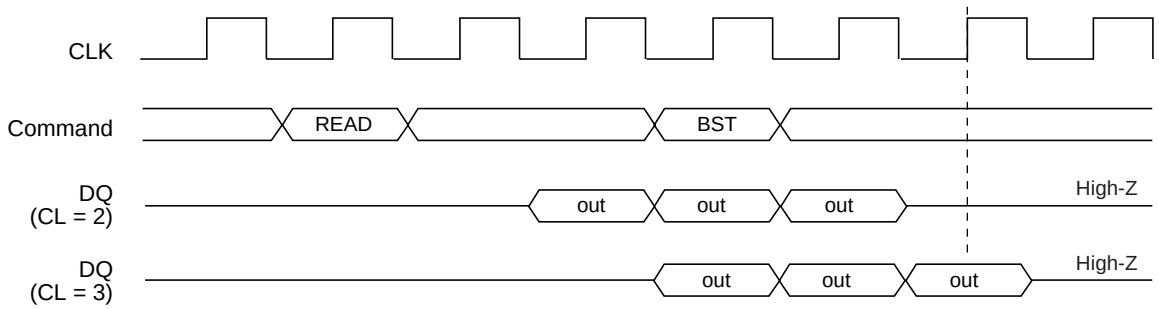

Burst Stop at Read

During a write cycle, when the burst stop command is issued, the burst write data are terminated and data bus goes to High-Z at the same clock with the burst stop command.

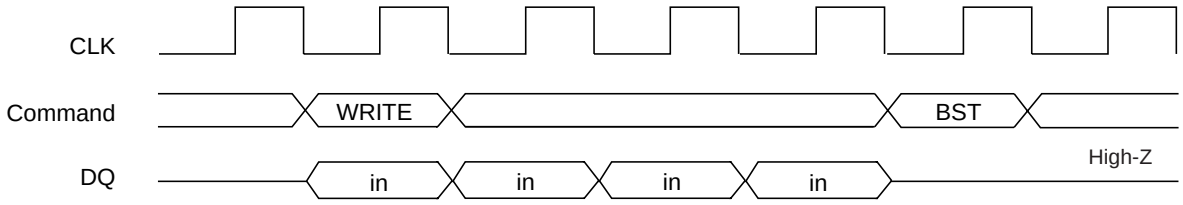

Burst Stop at Write

Command Intervals

Read command to Read command interval

1. Same bank, same ROW address: When another read command is executed at the same ROW address of the same bank as the preceding read command execution, the second read can be performed after an interval of no less than 1 clock. Even when the first command is a burst read that is not yet finished, the data read by the second command will be valid.

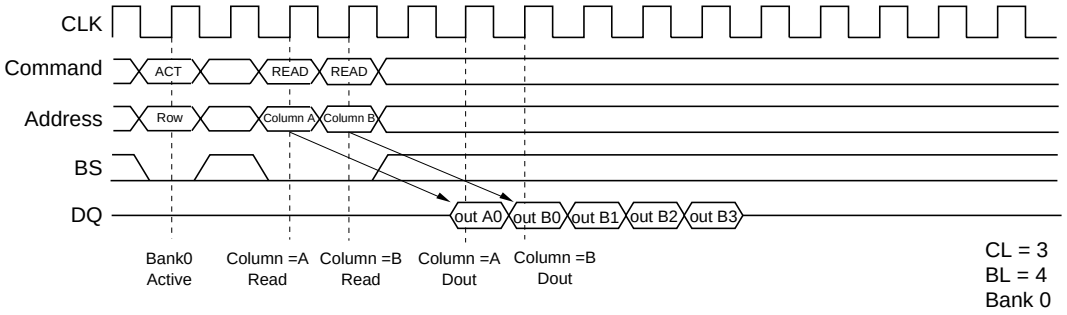

READ to READ Command Interval (same ROW address in same bank)

2. Same bank, different ROW address: When the ROW address changes on same bank, consecutive read commands cannot be executed; it is necessary to separate the two read commands with a precharge command and a bank active command.
3. Different bank: When the bank changes, the second read can be performed after an interval of no less than 1 clock, provided that the other bank is in the bank active state. Even when the first command is a burst read that is not yet finished, the data read by the second command will be valid.

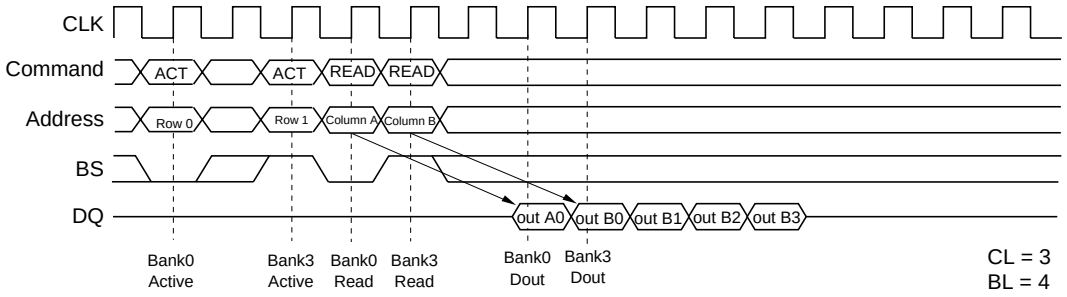

READ to READ Command Interval (different bank)

Write command to Write command interval

1. Same bank, same ROW address: When another write command is executed at the same ROW address of the same bank as the preceding write command, the second write can be performed after an interval of no less than 1 clock. In the case of burst writes, the second write command has priority.

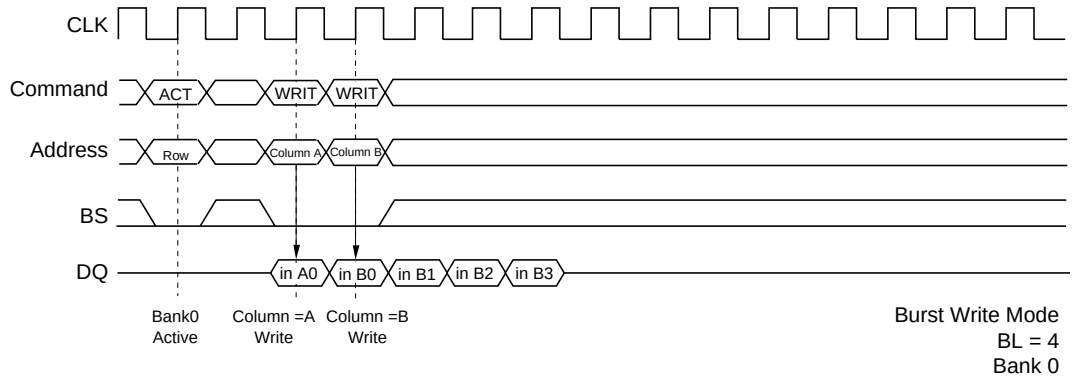

WRITE to WRITE Command Interval (same ROW address in same bank)

2. Same bank, different ROW address: When the ROW address changes, consecutive write commands cannot be executed; it is necessary to separate the two write commands with a precharge command and a bank active command.
3. Different bank: When the bank changes, the second write can be performed after an interval of no less than 1 clock, provided that the other bank is in the bank active state. In the case of burst write, the second write command has priority.

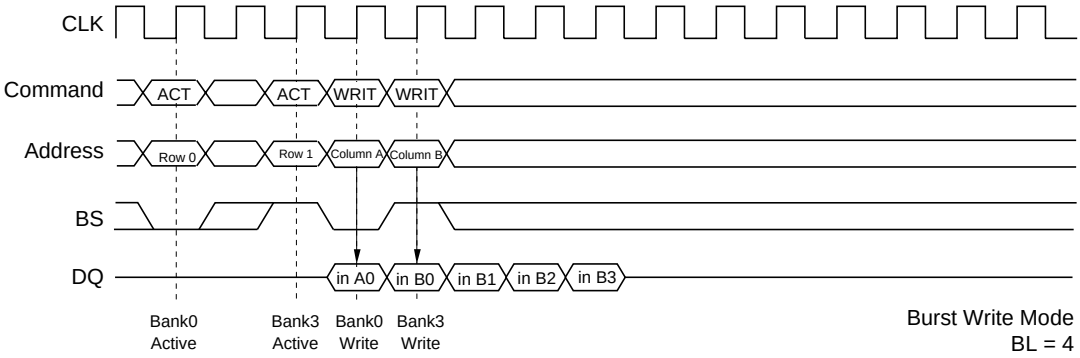

WRITE to WRITE Command Interval (different bank)

Read command to Write command interval

1. Same bank, same ROW address: When the write command is executed at the same ROW address of the same bank as the preceding read command, the write command can be performed after an interval of no less than 1 clock. However, UDQM and LDQM must be set High so that the output buffer becomes High-Z before data input.

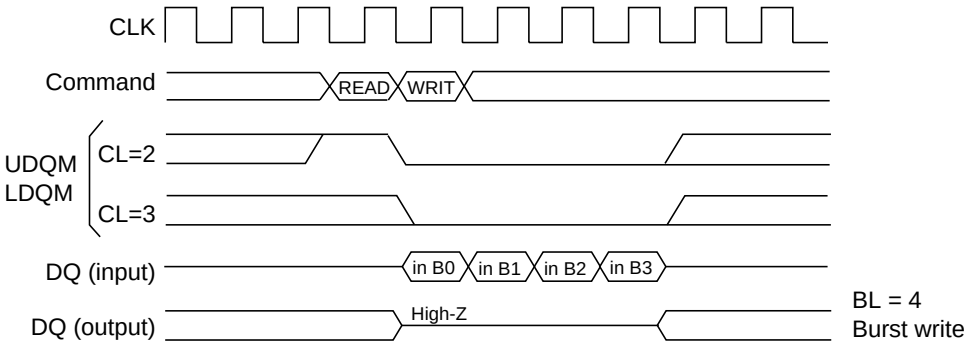

READ to WRITE Command Interval (1)

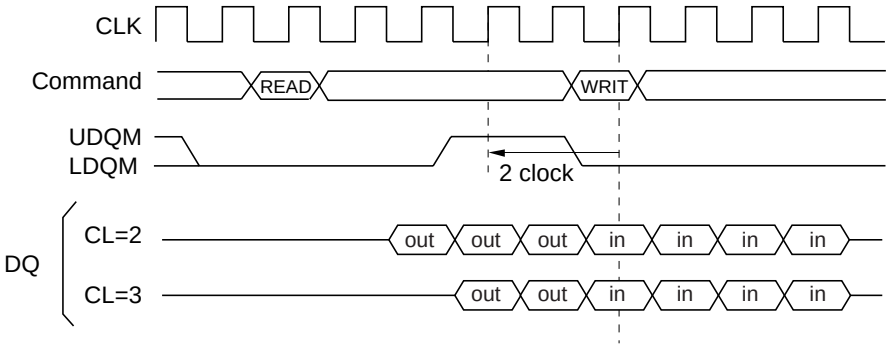

READ to WRITE Command Interval (2)

2. Same bank, different ROW address: When the ROW address changes, consecutive write commands cannot be executed; it is necessary to separate the two commands with a precharge command and a bank active command.
3. Different bank: When the bank changes, the write command can be performed after an interval of no less than 1 cycle, provided that the other bank is in the bank active state. However, UDQM and LDQM must be set High so that the output buffer becomes High-Z before data input.

Write command to Read command interval:

1. Same bank, same ROW address: When the read command is executed at the same ROW address of the same bank as the preceding write command, the read command can be performed after an interval of no less than 1 clock. However, in the case of a burst write, data will continue to be written until one clock before the read command is executed.

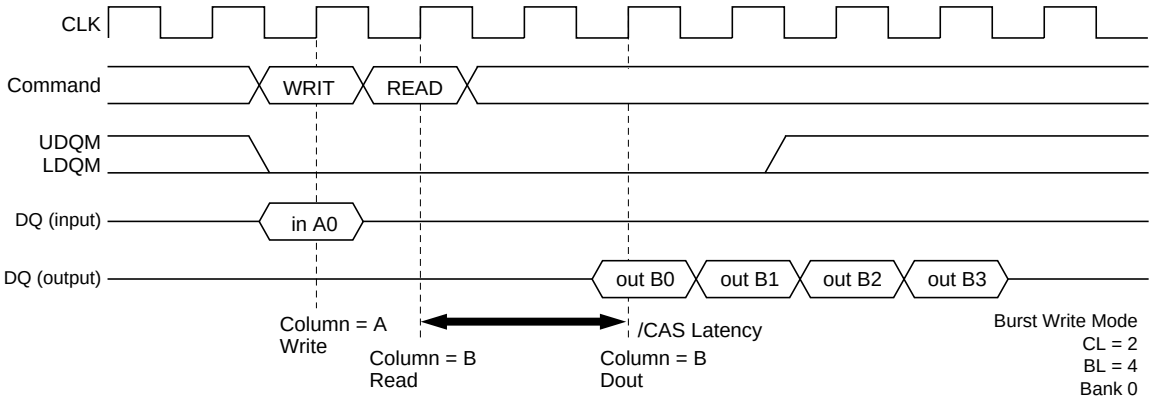

WRITE to READ Command Interval (1)

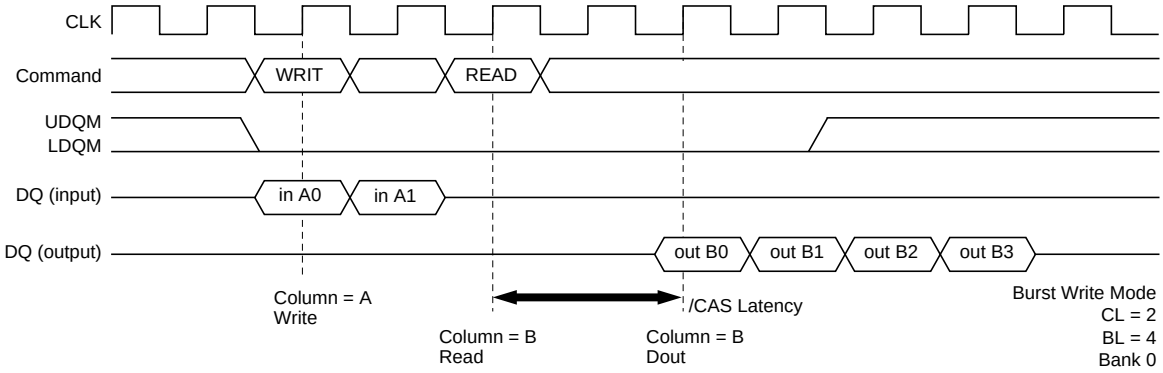

WRITE to READ Command Interval (2)

2. Same bank, different ROW address: When the ROW address changes, consecutive read commands cannot be executed; it is necessary to separate the two commands with a precharge command and a bank active command.
3. Different bank: When the bank changes, the read command can be performed after an interval of no less than 1 clock, provided that the other bank is in the bank active state. However, in the case of a burst write, data will continue to be written until one clock before the read command is executed (as in the case of the same bank and the same address).

Read with auto precharge to Read command interval

1. Different bank: When some banks are in the active state, the second read command (another bank) is executed. Even when the first read with auto-precharge is a burst read that is not yet finished, the data read by the second command is valid. The internal auto-precharge of one bank starts at the next clock of the second command.

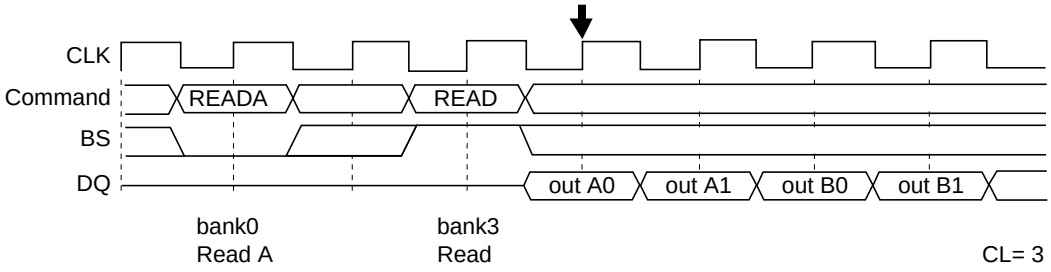

Note: Internal auto-precharge starts at the timing indicated by " ".

Read with Auto Precharge to Read Command Interval (Different bank)

2. Same bank: The consecutive read command (the same bank) is illegal.

Write with auto precharge to Write command interval

1. Different bank: When some banks are in the active state, the second write command (another bank) is executed. In the case of burst writes, the second write command has priority. The internal auto-precharge of one bank starts 2 clocks later from the second command.

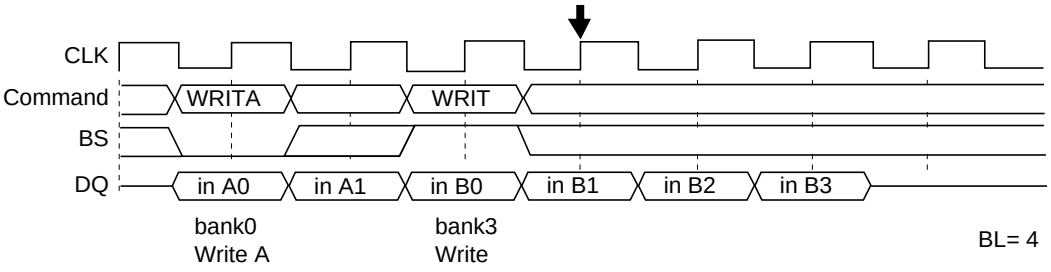

Note: Internal auto-precharge starts at the timing indicated by " ".

Write with Auto Precharge to Write Command Interval (Different bank)

2. Same bank: The consecutive write command (the same bank) is illegal.

Read with auto precharge to Write command interval

1. Different bank: When some banks are in the active state, the second write command (another bank) is executed. However, UDQM and LDQM must be set High so that the output buffer becomes High-Z before data input. The internal auto-precharge of one bank starts at the next clock of the second command.

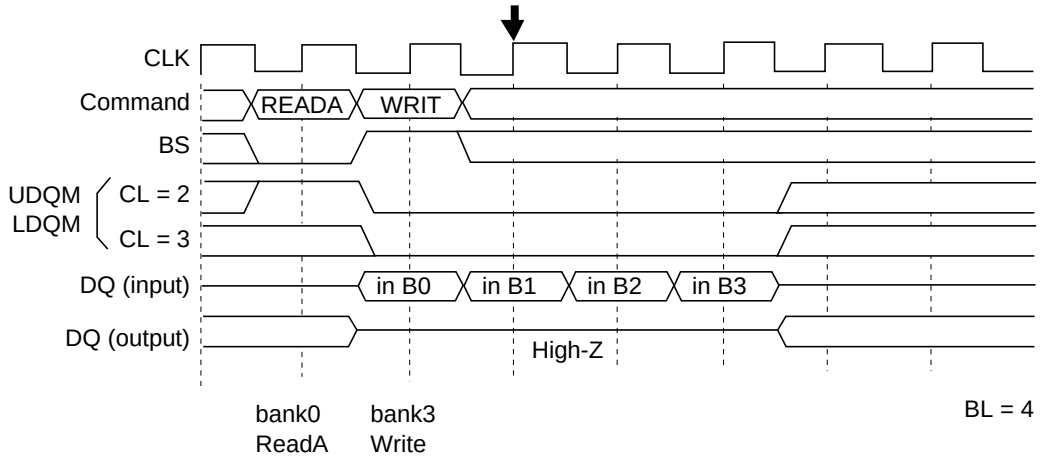

Note: Internal auto-precharge starts at the timing indicated by " ↓ ".

Read with Auto Precharge to Write Command Interval (Different bank)

2. Same bank: The consecutive write command from read with auto precharge (the same bank) is illegal. It is necessary to separate the two commands with a bank active command.

Write with auto precharge to Read command interval

1. Different bank: When some banks are in the active state, the second read command (another bank) is executed. However, in case of a burst write, data will continue to be written until one clock before the read command is executed. The internal auto-precharge of one bank starts at 2 clocks later from the second command.

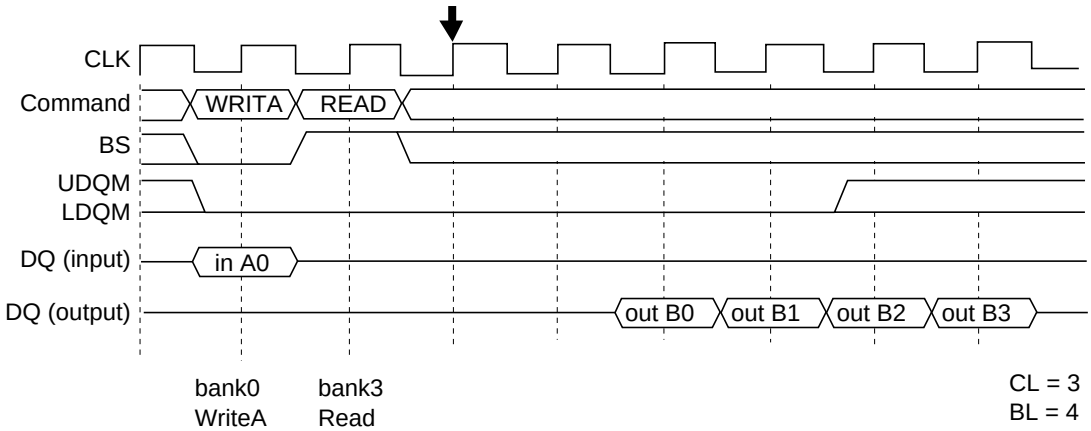

Note: Internal auto-precharge starts at the timing indicated by " ↓ ".

Write with Auto Precharge to Read Command Interval (Different bank)

2. Same bank: The consecutive read command from write with auto precharge (the same bank) is illegal. It is necessary to separate the two commands with a bank active command.

Read command to Precharge command interval (same bank)

When the precharge command is executed for the same bank as the read command that preceded it, the minimum interval between the two commands is one clock. However, since the output buffer then becomes High-Z after the clocks defined by *l*HZP, there is a case of interruption to burst read data output will be interrupted, if the precharge command is input during burst read. To read all data by burst read, the clocks defined by *l*EP must be assured as an interval from the final data output to precharge command execution.

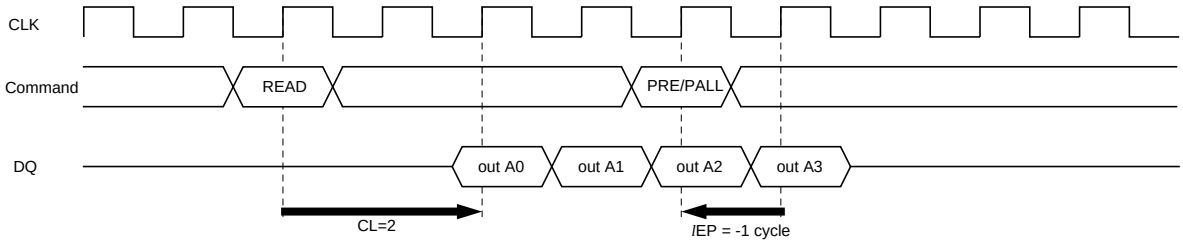

READ to PRECHARGE Command Interval (same bank): To output all data (CL = 2, BL = 4)

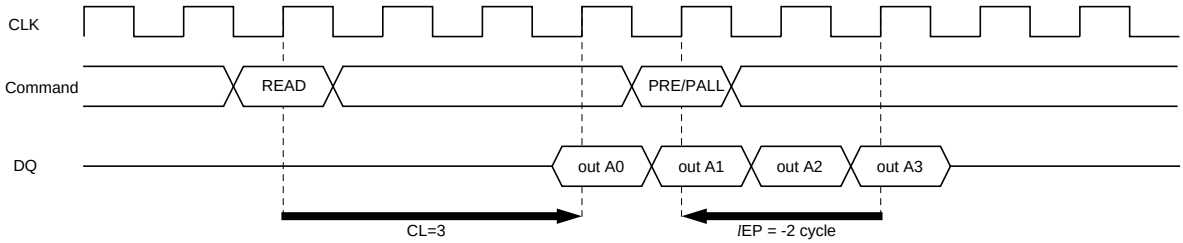

READ to PRECHARGE Command Interval (same bank): To output all data (CL = 3, BL = 4)

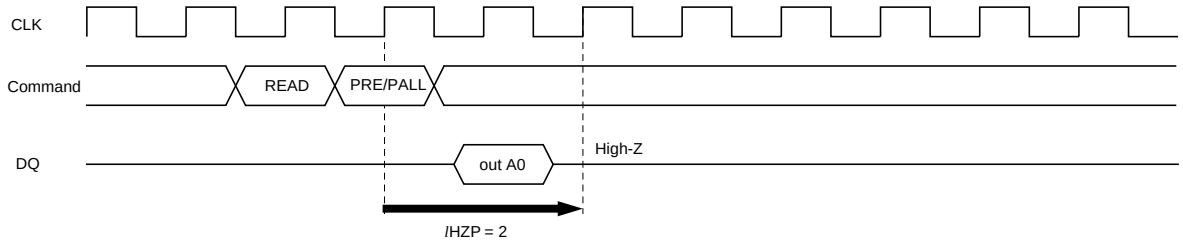

READ to PRECHARGE Command Interval (same bank): To stop output data (CL = 2, BL = 1, 2, 4, 8)

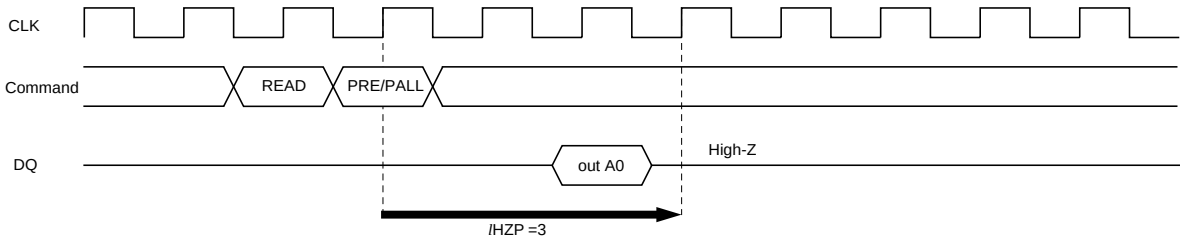

READ to PRECHARGE Command Interval (same bank): To stop output data (CL = 3, BL = 1, 2, 4, 8)

Write command to Precharge command interval (same bank)

When the precharge command is executed for the same bank as the write command that preceded it, the minimum interval between the two commands is 1 clock. However, if the burst write operation is unfinished, the input data must be masked by means of UDQM and LDQM for assurance of the clock defined by tDPL.

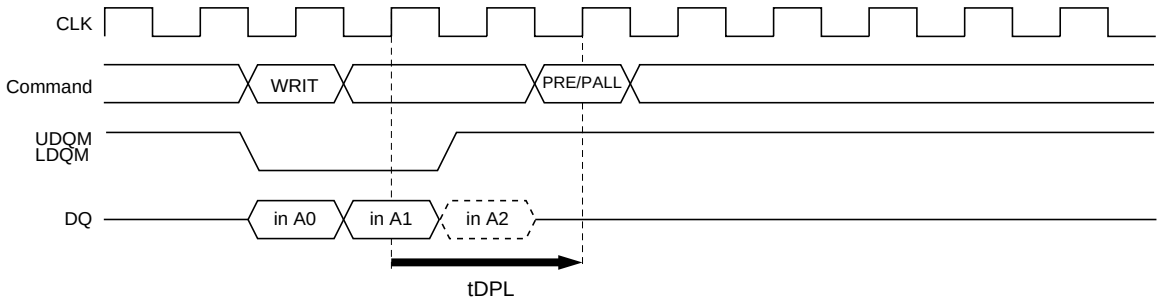

WRITE to PRECHARGE Command Interval (same bank) (BL = 4 (To stop write operation))

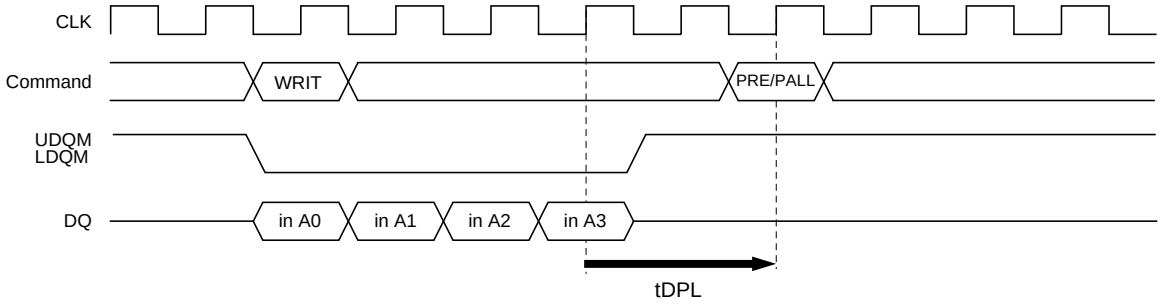

WRITE to PRECHARGE Command Interval (same bank) (BL = 4 (To write all data))

Bank active command interval

1. Same bank: The interval between the two bank active commands must be no less than tRC.
2. In the case of different bank active commands: The interval between the two bank active commands must be no less than tRRD.

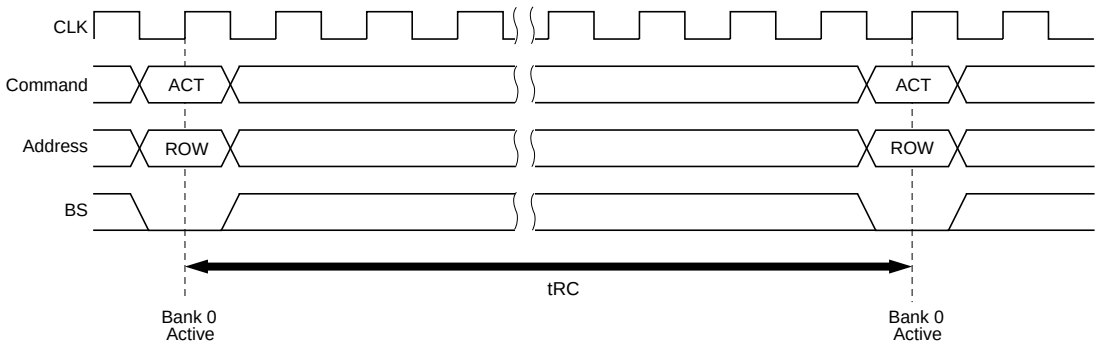

Bank Active to Bank Active for Same Bank

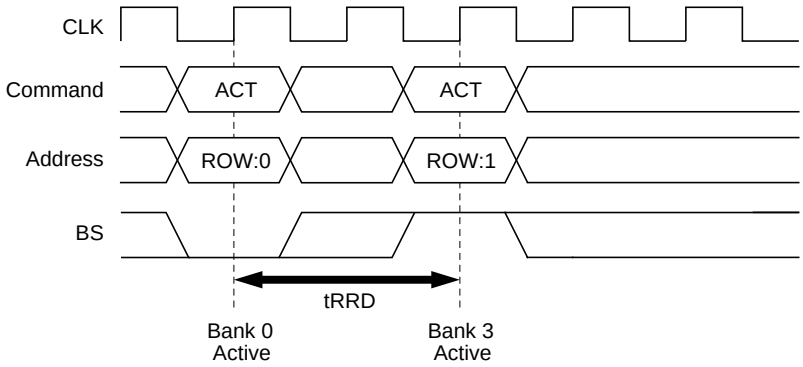

Bank Active to Bank Active for Different Bank

Mode register set to Bank active command interval

The interval between setting the mode register and executing a bank active command must be no less than *t*MRD.

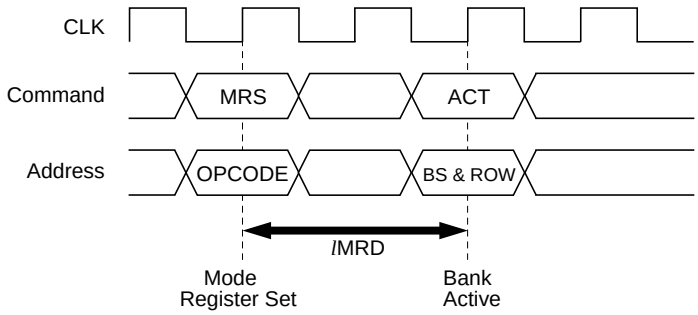

Mode register set to Bank active command interval

DQM Control

The UDQM and LDQM mask the upper and lower bytes of the DQ data, respectively. The timing of UDQM and LDQM is different during reading and writing.

Reading

When data is read, the output buffer can be controlled by UDQM and LDQM. By setting UDQM and LDQM to Low, the output buffer becomes Low-Z, enabling data output. By setting UDQM and LDQM to High, the output buffer becomes High-Z, and the corresponding data is not output. However, internal reading operations continue. The latency of UDQM and LDQM during reading is 2 clocks.

Writing

Input data can be masked by UDQM and LDQM. By setting DQM to Low, data can be written. In addition, when UDQM and LDQM are set to High, the corresponding data is not written, and the previous data is held. The latency of UDQM and LDQM during writing is 0 clock.

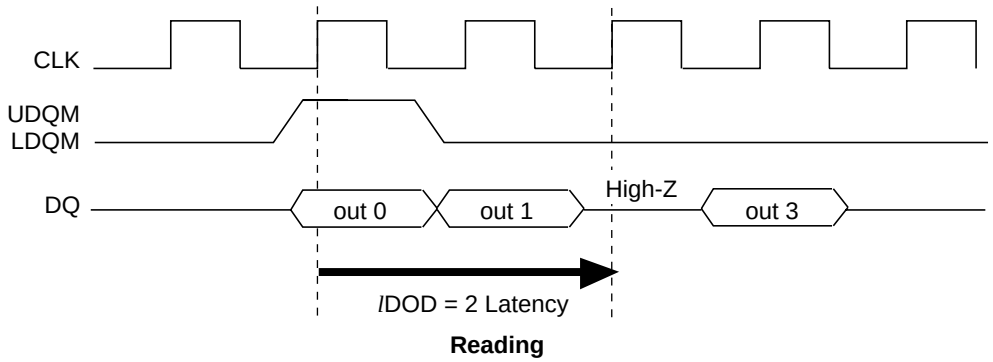

Reading

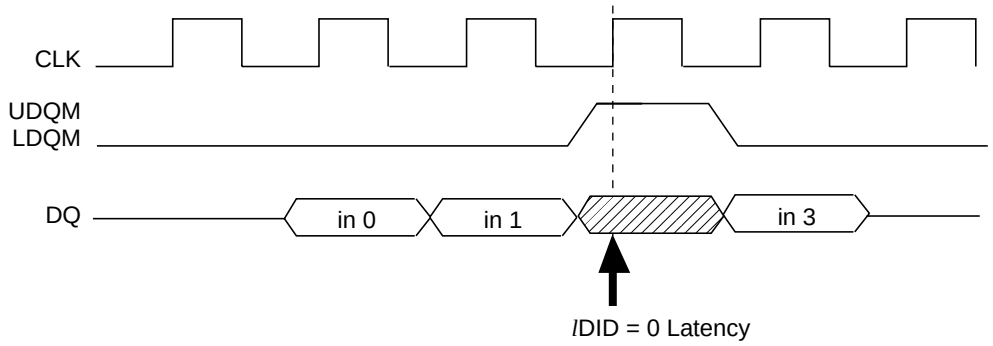

Writing

Refresh

Auto-refresh

All the banks must be precharged before executing an auto-refresh command. Since the auto-refresh command updates the internal counter every time it is executed and determines the banks and the ROW addresses to be refreshed, external address specification is not required. The refresh cycles are required to refresh all the ROW addresses within tREF (max.). The output buffer becomes High-Z after auto-refresh start. In addition, since a precharge has been completed by an internal operation after the auto-refresh, an additional precharge operation by the precharge command is not required.

Self-refresh

After executing a self-refresh command, the self-refresh operation continues while CKE is held Low. During self-refresh operation, all ROW addresses are refreshed by the internal refresh timer. A self-refresh is terminated by a self-refresh exit command. Before and after self-refresh mode, execute auto-refresh to all refresh addresses in or within tREF (max.) period on the condition 1 and 2 below.

1. Enter self-refresh mode within time as below* after either burst refresh or distributed refresh at equal interval to all refresh addresses are completed.
2. Start burst refresh or distributed refresh at equal interval to all refresh addresses within time as below*after exiting from self-refresh mode.

Note: tREF (max.) / refresh cycles.

Others

Power-down mode

The SDRAM enters power-down mode when CKE goes Low in the IDLE state. In power down mode, power consumption is suppressed by deactivating the input initial circuit. Power down mode continues while CKE is held Low. In addition, by setting CKE to High, the SDRAM exits from the power down mode, and command input is enabled from the next clock. In this mode, internal refresh is not performed.

Clock suspend mode

By driving CKE to Low during a bank active or read/write operation, the SDRAM enters clock suspend mode. During clock suspend mode, external input signals are ignored and the internal state is maintained. When CKE is driven High, the SDRAM terminates clock suspend mode, and command input is enabled from the next clock. For details, refer to the "CKE Truth Table".

Timing Waveforms

Read Cycle

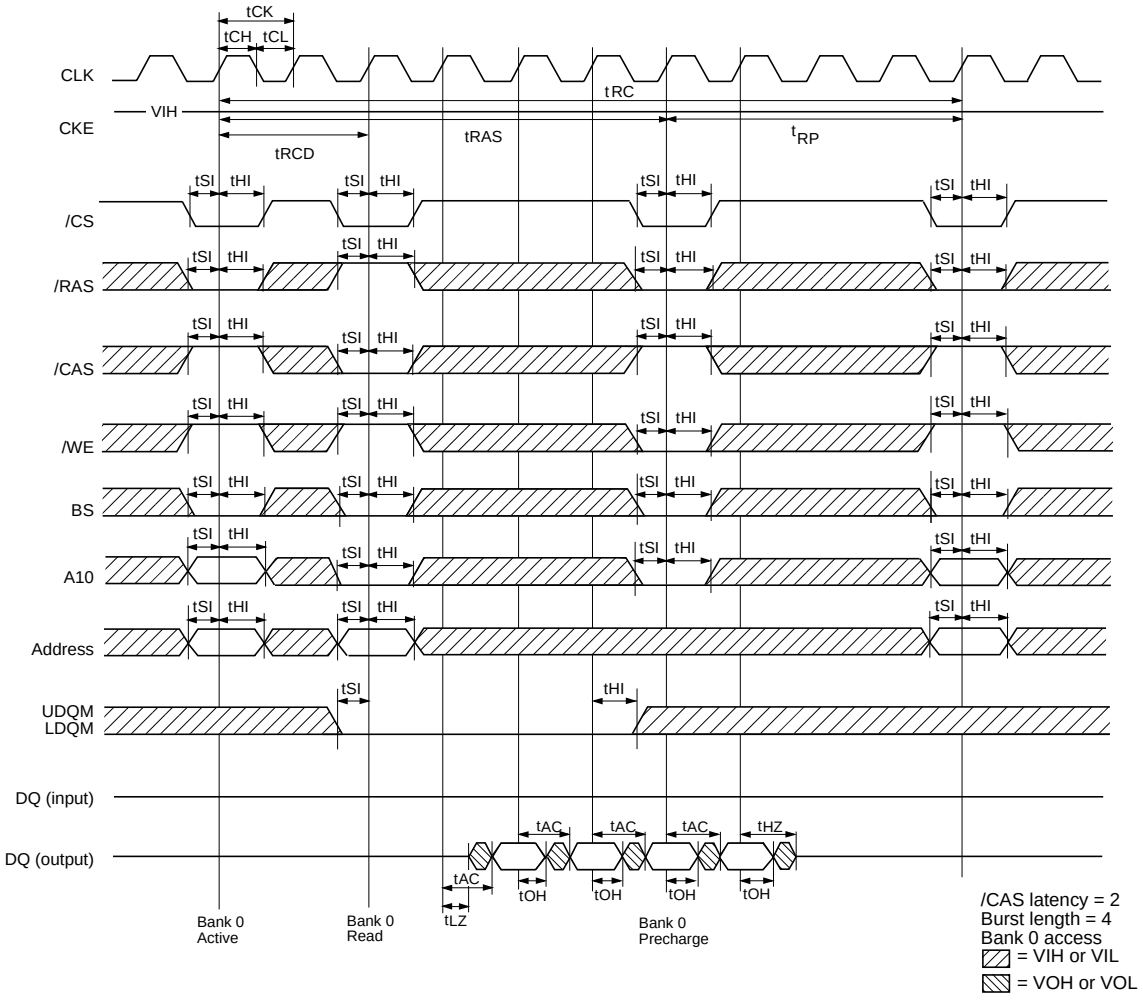

Write Cycle

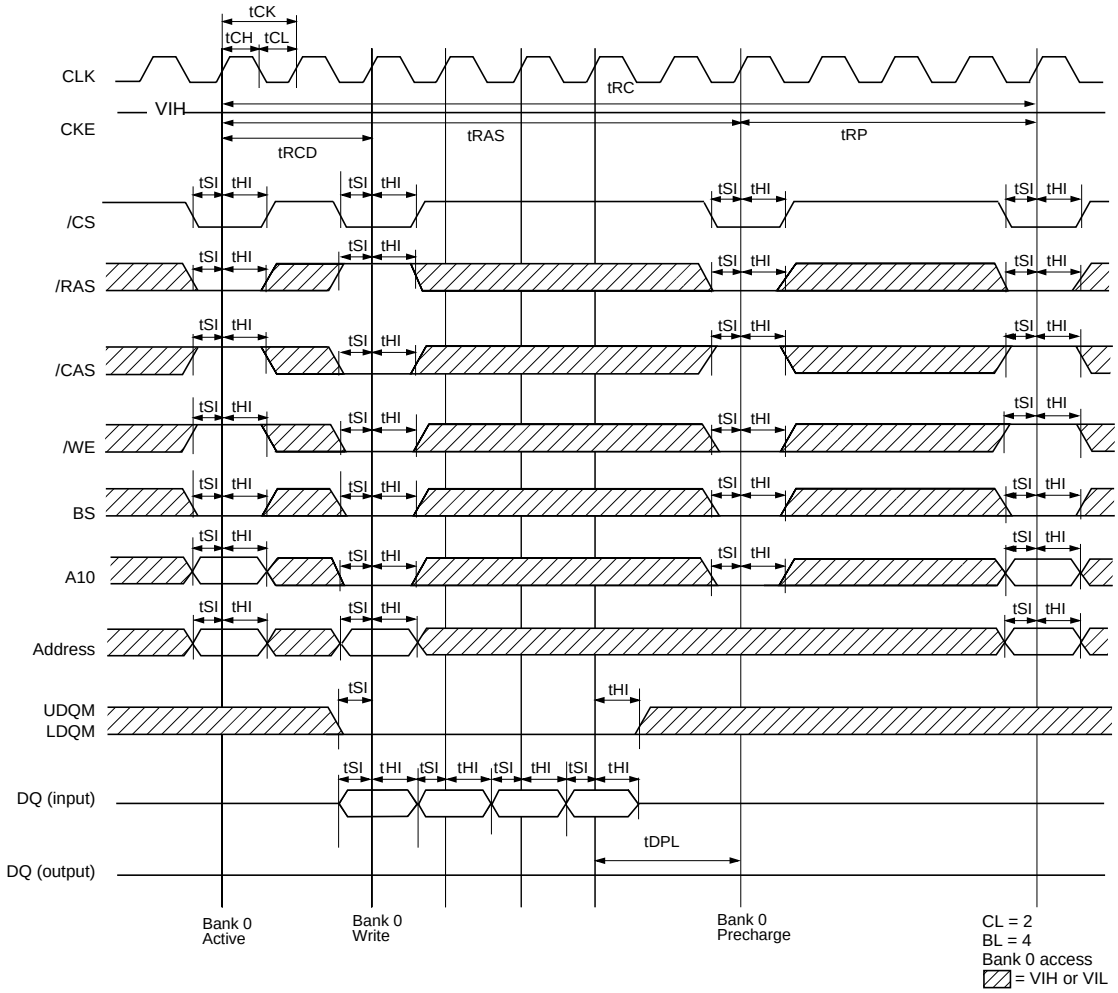

Mode Register Set Cycle

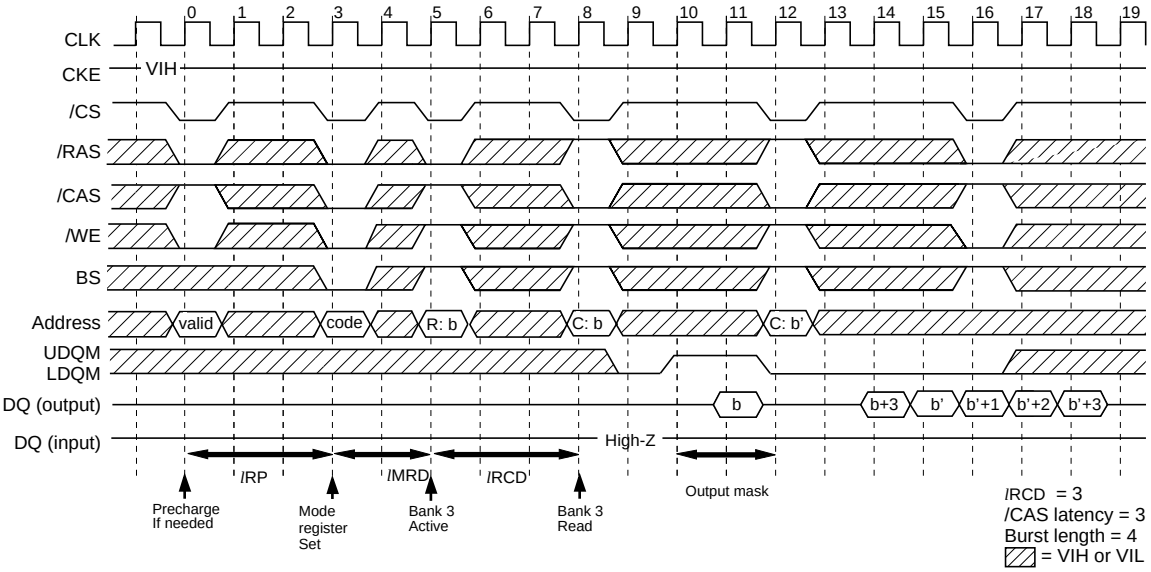

Read Cycle/Write Cycle

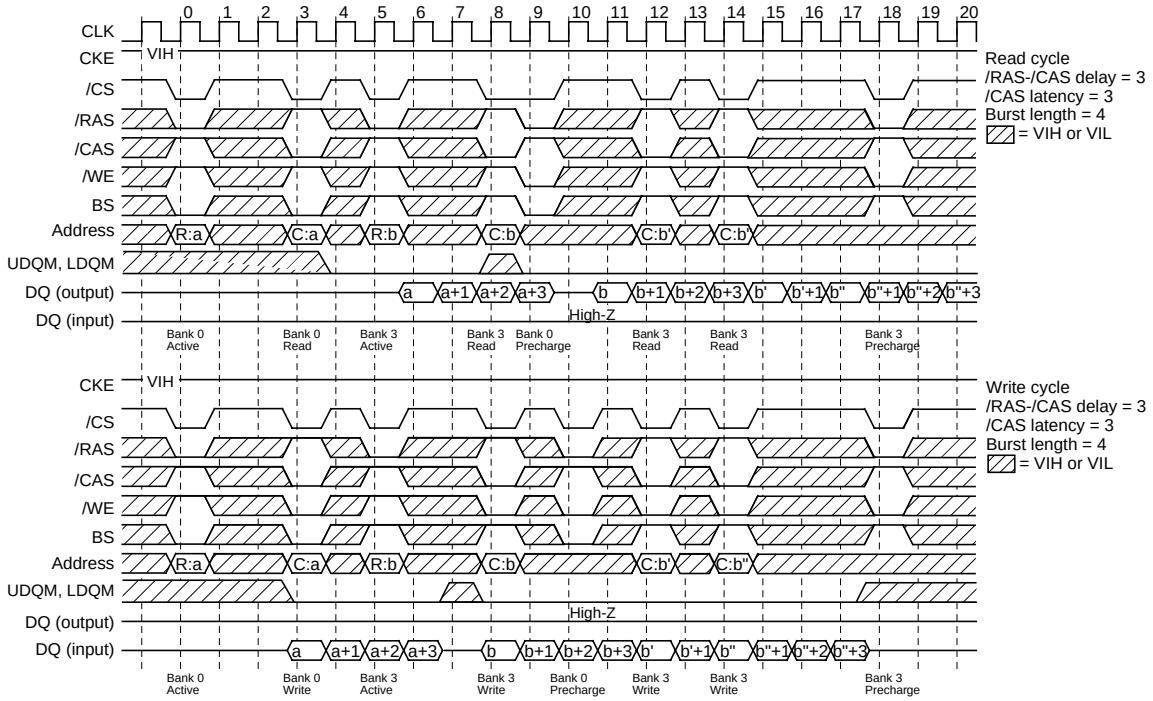

Read/Single Write Cycle

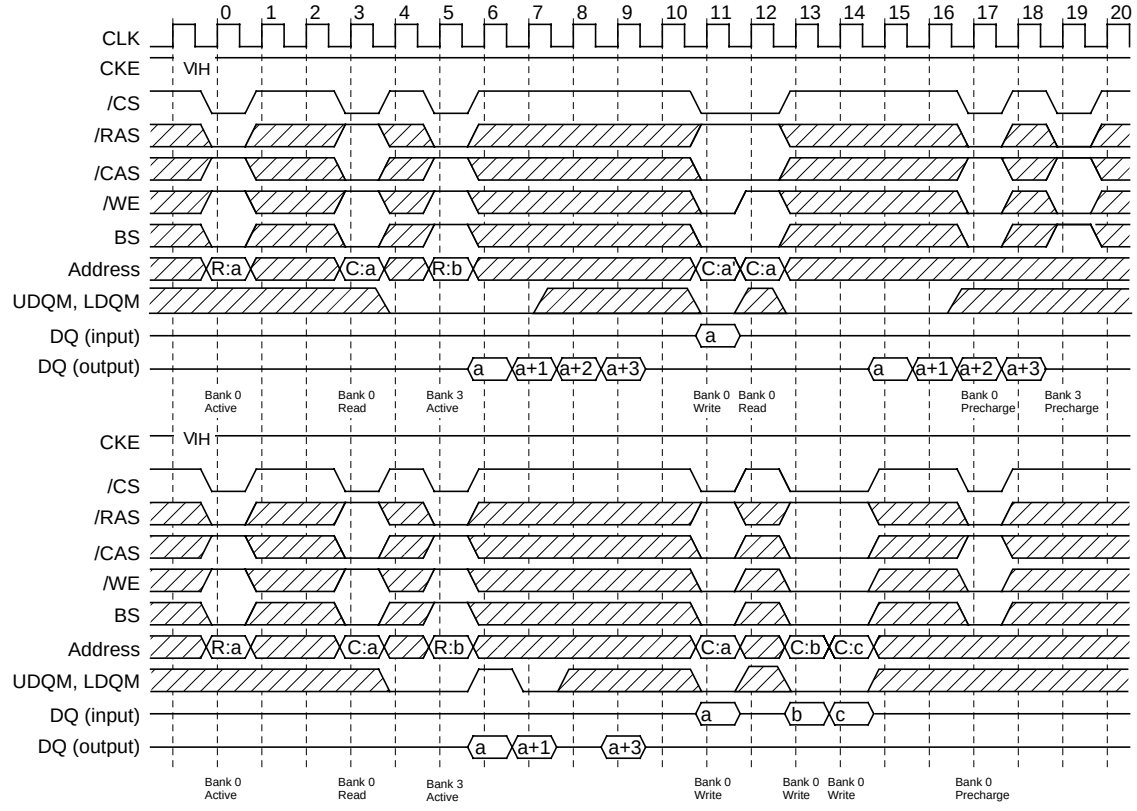

Read/Burst Write Cycle

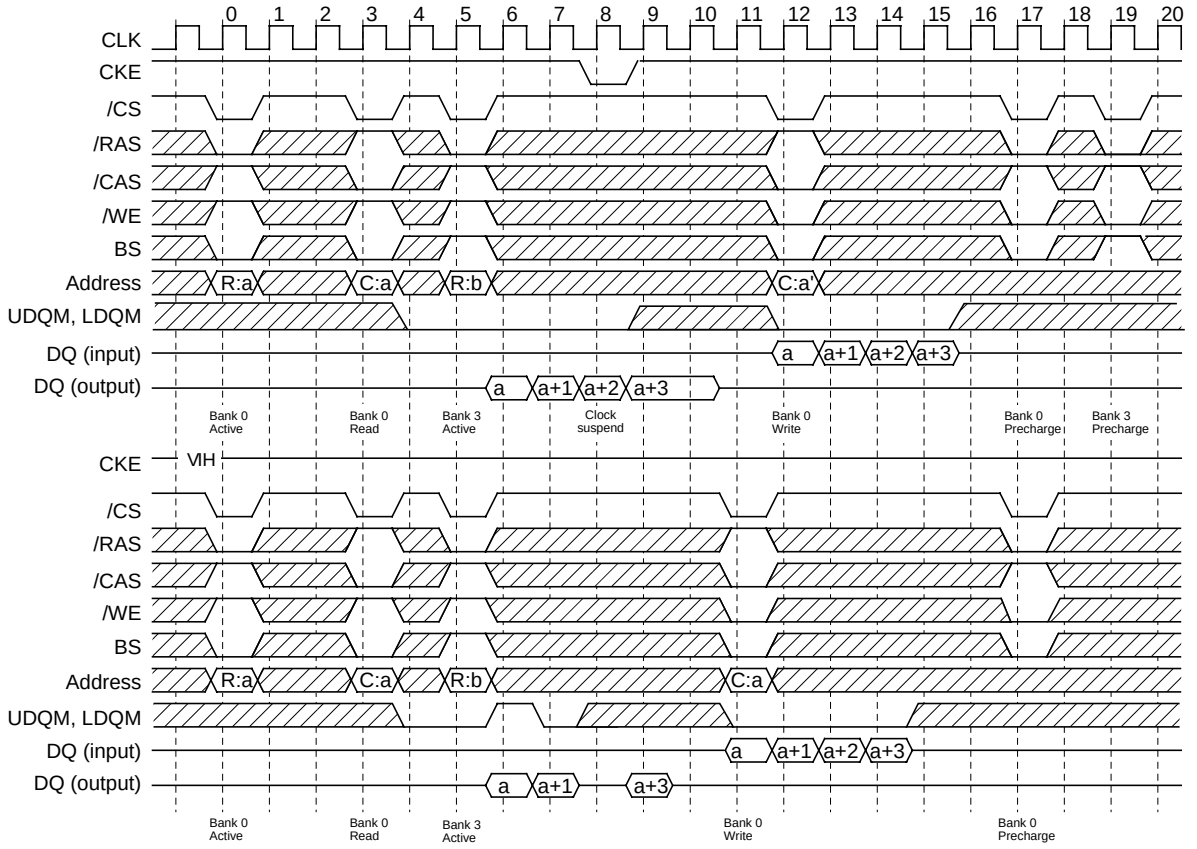

Auto Refresh Cycle

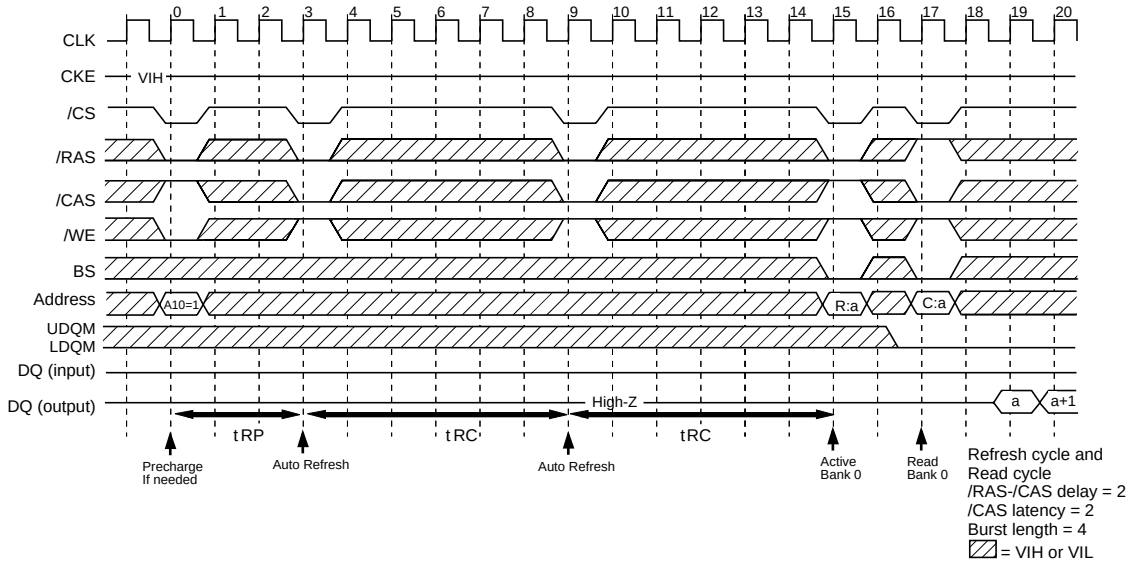

Self Refresh Cycle

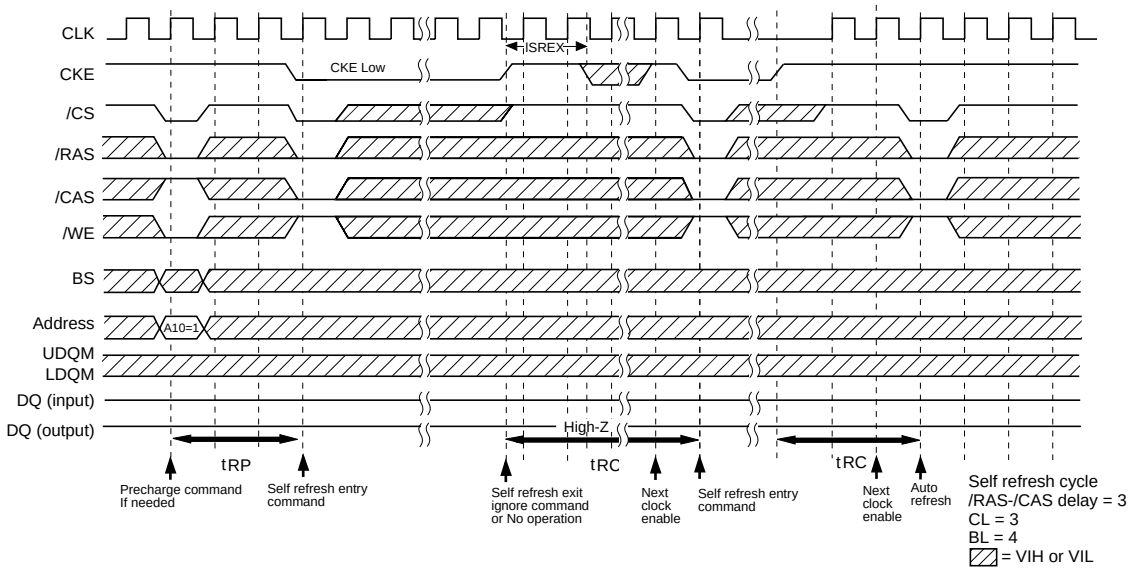

Clock Suspend Mode

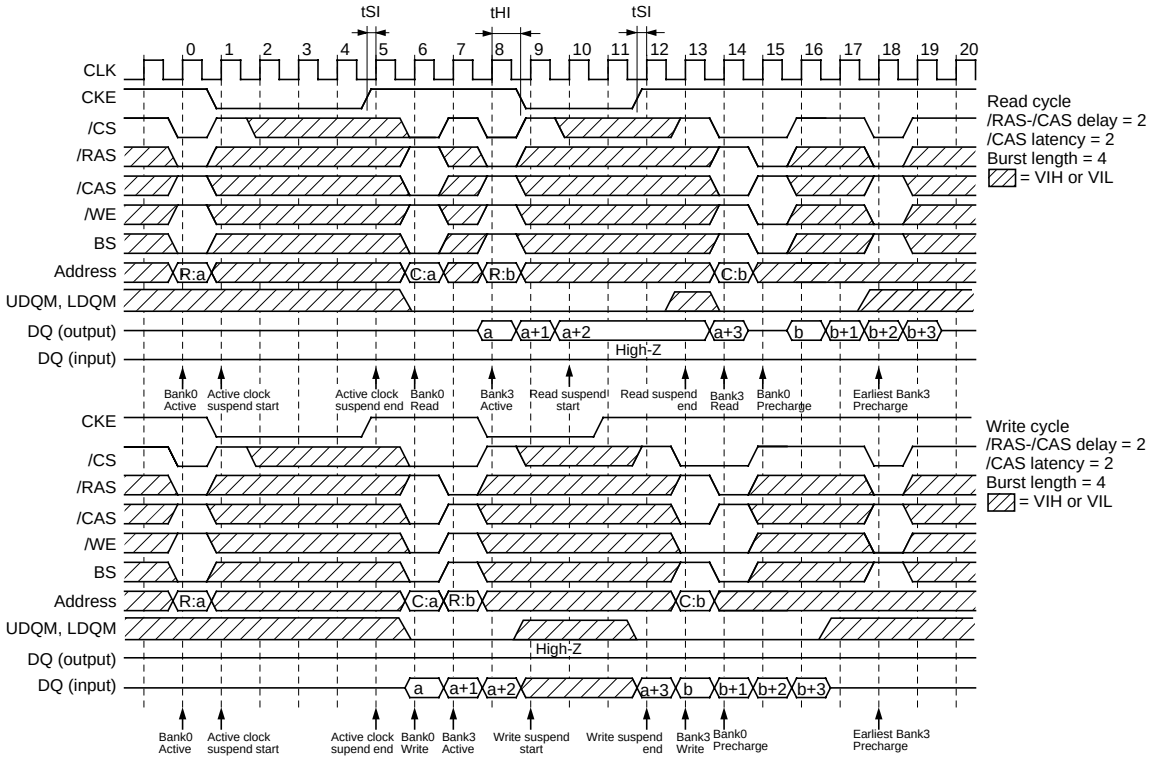

Power Down Mode

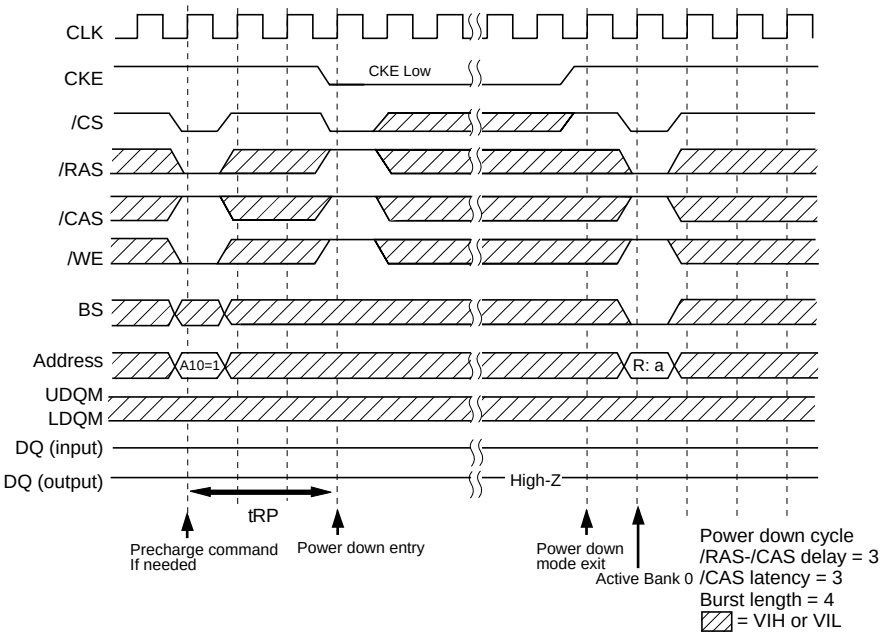

Initialization Sequence

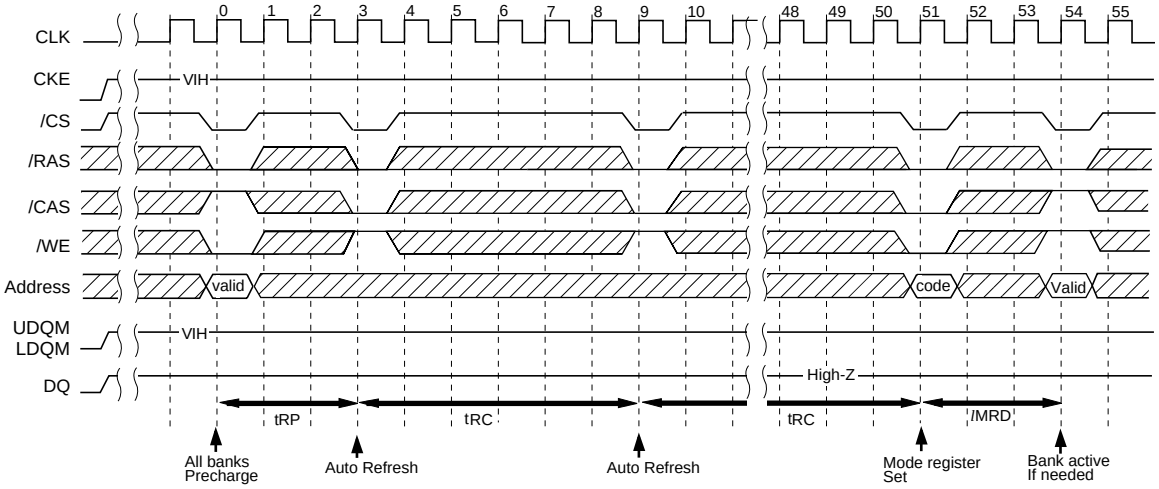

Package Drawing

54-pin Plastic TSOP(II)

Solder plating: Lead free (Sn-Bi)

Unit: mm

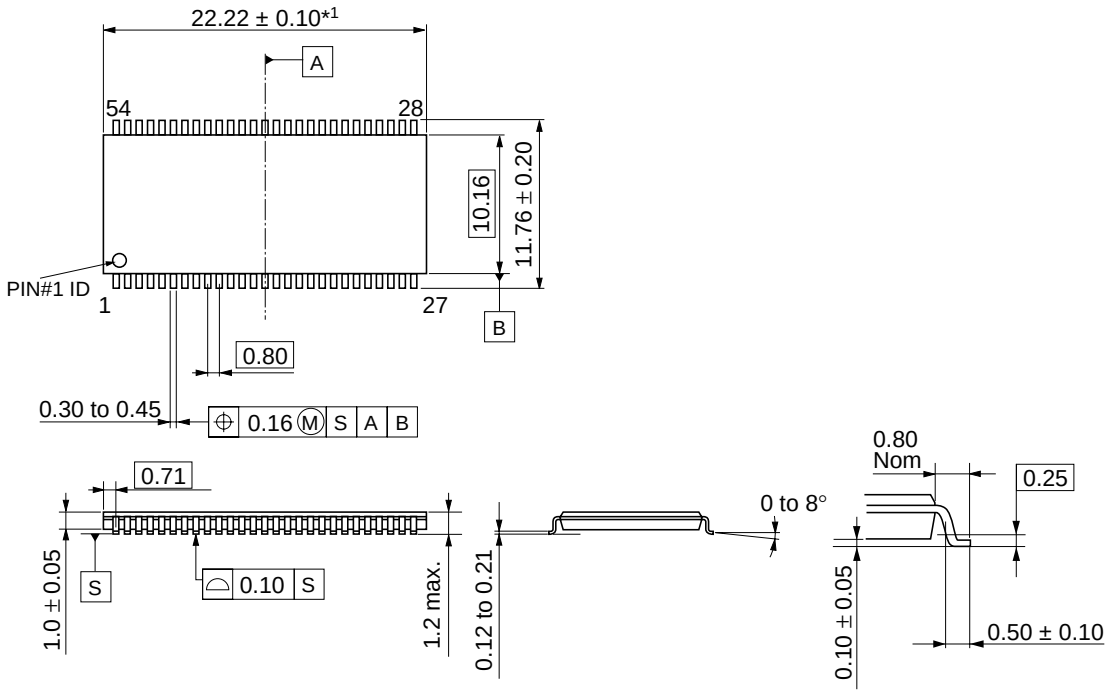

Note: 1. This dimension does not include mold protrusions or gate burrs.
Mold protrusions and gate burrs shall not exceed 0.15mm per side.

ECA-TS2-0102-01

Recommended Soldering Conditions

Please consult with our sales offices for soldering conditions of the EDS1216AATA.

Type of Surface Mount Device

EDS1216AATA: 54-pin Plastic TSOP(II) < Lead free (Sn-Bi) >

NOTES FOR CMOS DEVICES

① PRECAUTION AGAINST ESD FOR MOS DEVICES

Exposing the MOS devices to a strong electric field can cause destruction of the gate oxide and ultimately degrade the MOS devices operation. Steps must be taken to stop generation of static electricity as much as possible, and quickly dissipate it, when once it has occurred. Environmental control must be adequate. When it is dry, humidifier should be used. It is recommended to avoid using insulators that easily build static electricity. MOS devices must be stored and transported in an anti-static container, static shielding bag or conductive material. All test and measurement tools including work bench and floor should be grounded. The operator should be grounded using wrist strap. MOS devices must not be touched with bare hands. Similar precautions need to be taken for PW boards with semiconductor MOS devices on it.

② HANDLING OF UNUSED INPUT PINS FOR CMOS DEVICES

No connection for CMOS devices input pins can be a cause of malfunction. If no connection is provided to the input pins, it is possible that an internal input level may be generated due to noise, etc., hence causing malfunction. CMOS devices behave differently than Bipolar or NMOS devices. Input levels of CMOS devices must be fixed high or low by using a pull-up or pull-down circuitry. Each unused pin should be connected to V_{DD} or GND with a resistor, if it is considered to have a possibility of being an output pin. The unused pins must be handled in accordance with the related specifications.

③ STATUS BEFORE INITIALIZATION OF MOS DEVICES

Power-on does not necessarily define initial status of MOS devices. Production process of MOS does not define the initial operation status of the device. Immediately after the power source is turned ON, the MOS devices with reset function have not yet been initialized. Hence, power-on does not guarantee output pin levels, I/O settings or contents of registers. MOS devices are not initialized until the reset signal is received. Reset operation must be executed immediately after power-on for MOS devices having reset function.

CME0107

The information in this document is subject to change without notice. Before using this document, confirm that this is the latest version.

No part of this document may be copied or reproduced in any form or by any means without the prior written consent of Elpida Memory, Inc.

Elpida Memory, Inc. does not assume any liability for infringement of any intellectual property rights (including but not limited to patents, copyrights, and circuit layout licenses) of Elpida Memory, Inc. or third parties by or arising from the use of the products or information listed in this document. No license, express, implied or otherwise, is granted under any patents, copyrights or other intellectual property rights of Elpida Memory, Inc. or others.

Descriptions of circuits, software and other related information in this document are provided for illustrative purposes in semiconductor product operation and application examples. The incorporation of these circuits, software and information in the design of the customer's equipment shall be done under the full responsibility of the customer. Elpida Memory, Inc. assumes no responsibility for any losses incurred by customers or third parties arising from the use of these circuits, software and information.

[Product applications]
Elpida Memory, Inc. makes every attempt to ensure that its products are of high quality and reliability. However, users are instructed to contact Elpida Memory's sales office before using the product in aerospace, aeronautics, nuclear power, combustion control, transportation, traffic, safety equipment, medical equipment for life support, or other such application in which especially high quality and reliability is demanded or where its failure or malfunction may directly threaten human life or cause risk of bodily injury.

[Product usage]
Design your application so that the product is used within the ranges and conditions guaranteed by Elpida Memory, Inc., including the maximum ratings, operating supply voltage range, heat radiation characteristics, installation conditions and other related characteristics. Elpida Memory, Inc. bears no responsibility for failure or damage when the product is used beyond the guaranteed ranges and conditions. Even within the guaranteed ranges and conditions, consider normally foreseeable failure rates or failure modes in semiconductor devices and employ systemic measures such as fail-safes, so that the equipment incorporating Elpida Memory, Inc. products does not cause bodily injury, fire or other consequential damage due to the operation of the Elpida Memory, Inc. product.

[Usage environment]
This product is not designed to be resistant to electromagnetic waves or radiation. This product must be used in a non-condensing environment.

If you export the products or technology described in this document that are controlled by the Foreign Exchange and Foreign Trade Law of Japan, you must follow the necessary procedures in accordance with the relevant laws and regulations of Japan. Also, if you export products/technology controlled by U.S. export control regulations, or another country's export control laws or regulations, you must follow the necessary procedures in accordance with such laws or regulations.
If these products/technology are sold, leased, or transferred to a third party, or a third party is granted license to use these products, that third party must be made aware that they are responsible for compliance with the relevant laws and regulations.

M01E0107