查询EE-SY110供应商 捷多邦，专业PCB打样工厂，24小时加急出货

OMRON®

EE-SY110/113/171

Compact Reflective Phototransistor Output

- Low-profiled model with an overall height of only 3 mm (EE-SY171)
- Models with a circuit integrated into molded housing provide special cost advantages (EE-SY110/113)
- Model with a filter reduces effects of external visible light (EE-SY113)

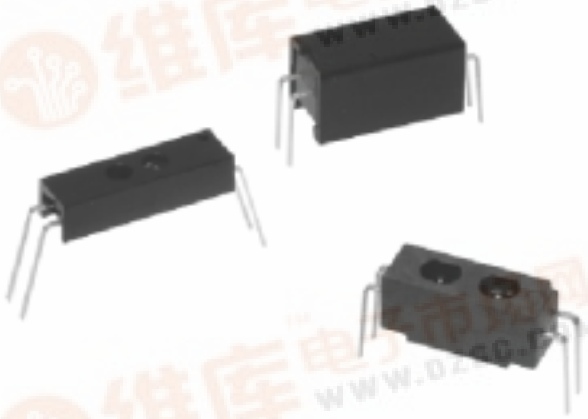

Ordering Information

Appearance	Sensing method	Sensing distance	Sensing object	Output configuration	Weight	**Part number**
	Reflective	3.5 mm	White paper with reflection factor of 90%	Phototransistor	0.3 g	**EE-SY171**
		4.4 mm			Approx. 0.5 g	**EE-SY113**
		5 mm			Approx. 0.4 g	**EE-SY110**

Specifications

■ ABSOLUTE MAXIMUM RATINGS (T_A = 25°C)

Item		Symbol	Rated value
Input	Forward current	I_F	50 mA*
	Pulse forward current	I_{FP}	1 A**
	Reverse voltage	V_R	4 V
Output	Collector-emitter voltage	V_{CEO}	30 V
	Collector current	I_C	20 mA
	Collector dissipation	P_C	100 mW*
Ambient temperature	Operating	Topr	-40°C to 85°C (-40°F to 185°F)
	Storage	Tstg	-40°C to 85°C (-40°F to 185°F)

*Refer to Engineering Data if the ambient temperature is not within the normal room temperature range.
**This value was measured with a pulse width of 10 µs and a repeating frequency of 100 Hz.

找PDF 维库一下 pdf.dzsc.com

■ CHARACTERISTICS (T_A = 25°C)

Item		Symbol	EE-SY110		EE-SY171		EE-SY113	
			Value	Condition	Value	Condition	Value	Condition
Emitter	Forward voltage	V_F	1.5 V max.	I_F = 30 mA	1.5 V max.	I_F = 30 mA	1.5 V max.	I_F = 30 mA
	Reverse current	I_R	10 µA max.	V_R = 4 V	10 µA max.	V_R = 4 V	10 µA max.	V_R = 4 V
	Peak emission wavelength	λp(L)	940 nm typ.	I_F = 20 mA	940 nm typ.	I_F = 20 mA	940 nm typ.	I_F = 20 mA
Receiver	Dark current	I_D	200 nA max.	V_{CE} = 10 V 0*lx*	200 nA max.	V_{CE} = 10 V 0*lx*	200 nA max.	V_{CE} = 10 V 0*lx*
	Peak spectral sensitivity wavelength	λp(P)	850 nm typ.	V_{CE} = 10 V	850 nm typ.	V_{CE} = 10 V	850 nm typ.	V_{CE} = 10 V
Combination	Light current	I_L	200 to 2,000 µA	I_F = 20 mA V_{CE} = 10 V White paper with a reflection factor of 90% at a distance of 5 mm	50 to 500 µA	I_F = 20 mA V_{CE} = 10 V White paper with a reflection factor of 90% at a distance of 3.5 mm	160 to 1,600 µA	I_F = 20 mA V_{CE} = 10 V White paper with a reflection factor of 90% at a distance of 4.4 mm
	Leakage current	I_{LEAK}	2 µA max.	I_F = 20 mA V_{CE} = 10 V*	200 nA max.	I_F = 20 mA V_{CE} = 10 V*	2 µA max.	I_F = 20 mA V_{CE} = 10 V*
	Rising time**	tr	30 µs typ.	V_{CC} = 5 V R_L = 1 kΩ I_L = 1 mA	30 µs typ.	V_{CC} = 5 V R_L = 1 kΩ I_L = 1 mA	30 µs typ.	V_{CC} = 5 V R_L = 1 kΩ I_L = 1 mA
	Falling time**	tf	30 µs typ.		30 µs typ.		30 µs typ.	

*The sensing object reflects no light.
**The following illustrations show the rising time, tr, and the falling time, tf.

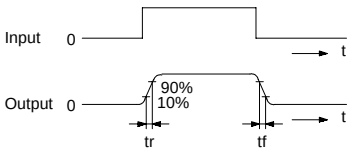

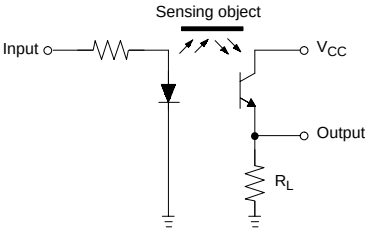

Engineering Data

Note: The operating conditions of the photomicrosensor must be within the absolute maximum rating ranges.

■ TEMPERATURE CHARACTERISTICS

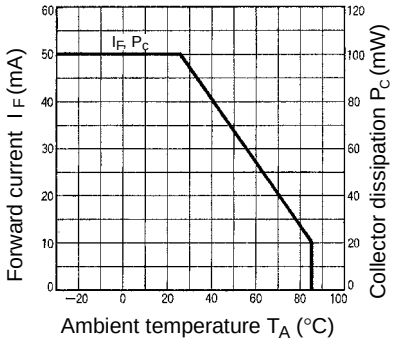

■ INPUT CHARACTERISTICS (TYPICAL)

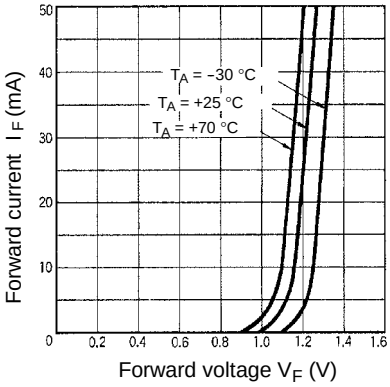

■ INPUT/OUTPUT CHARACTERISTICS (TYPICAL)

EE-SY110

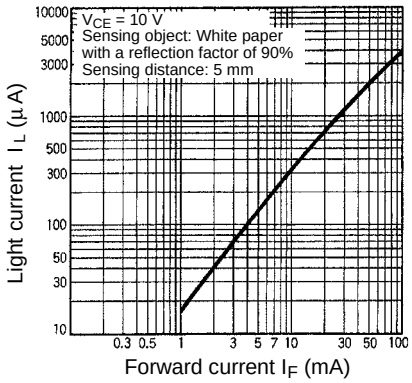

EE-SY171

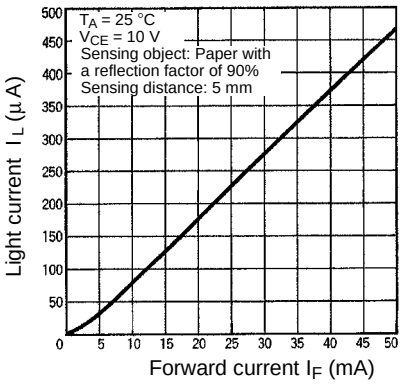

■ OUTPUT CHARACTERISTICS (TYPICAL)

EE-SY110

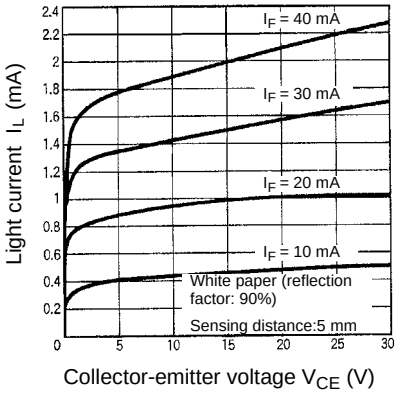

EE-SY171

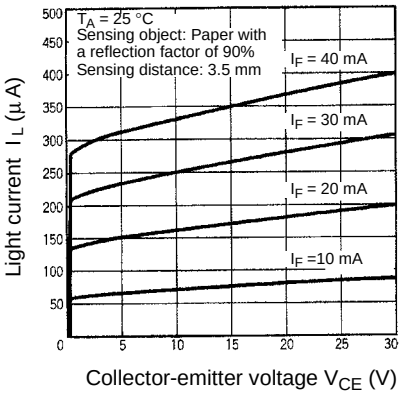

■ LIGHT CURRENT TEMPERATURE DEPENDENCY (TYPICAL)

EE-SY110/113

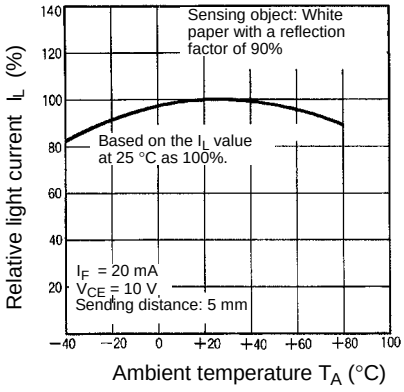

EE-SY171

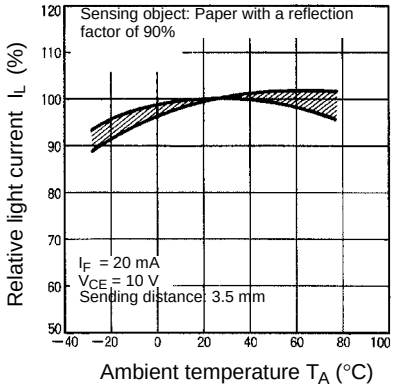

■ LEAKAGE CURRENT CHARACTERISTICS (TYPICAL)

EE-SY171

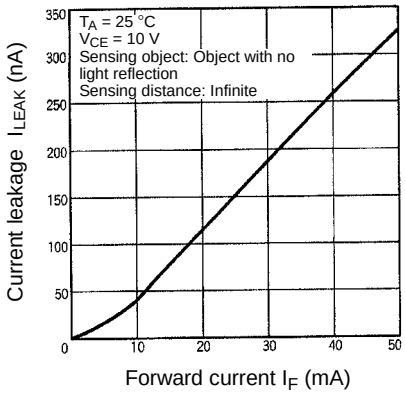

■ SENSING DISTANCE CHARACTERISTICS 1 (TYPICAL)

EE-SY110

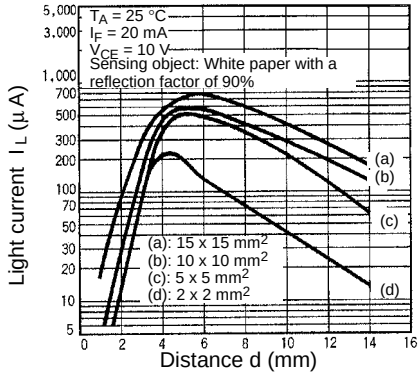

■ SENSING DISTANCE CHARACTERISTICS 2 (TYPICAL)

EE-SY171

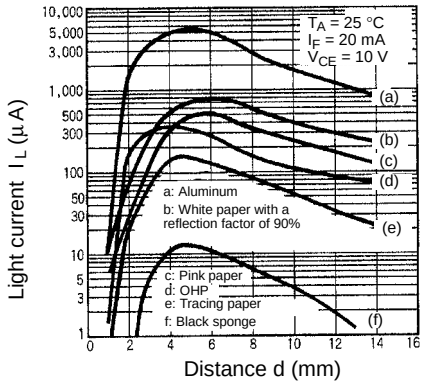

■ SENSING DISTANCE CHARACTERISTICS (TYPICAL)

EE-SY171

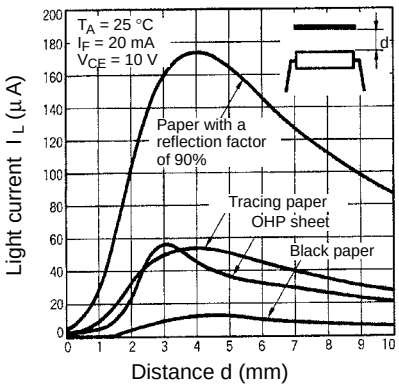

EE-SY110

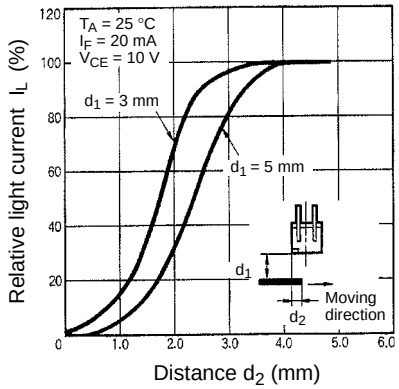

EE-SY171

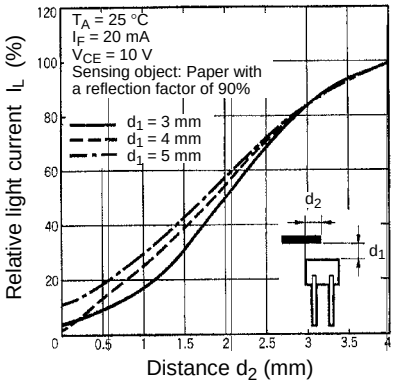

■ SWITCHING CHARACTERISTICS (RISE TIME, TYPICAL)

EE-SY110/113

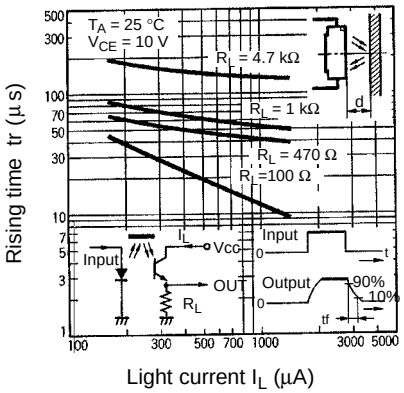

EE-SY171

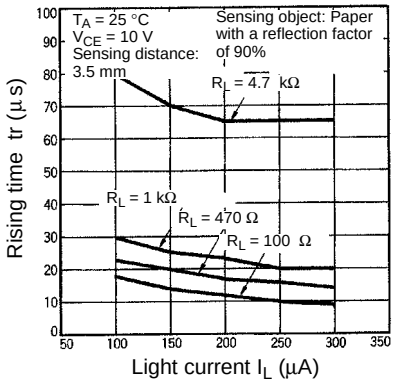

■ SWITCHING CHARACTERISTICS (FALL TIME, TYPICAL)

EE-SY110/113

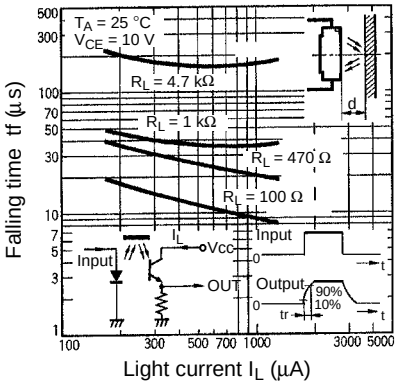

EE-SY171

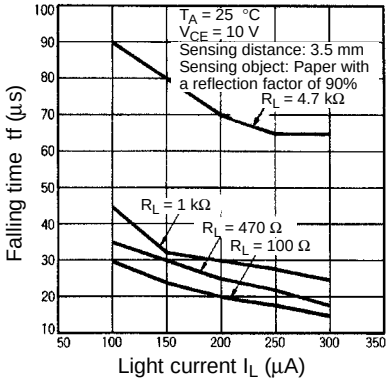

■ SENSING ANGLE CHARACTERISTICS (TYPICAL)

EE-SY110

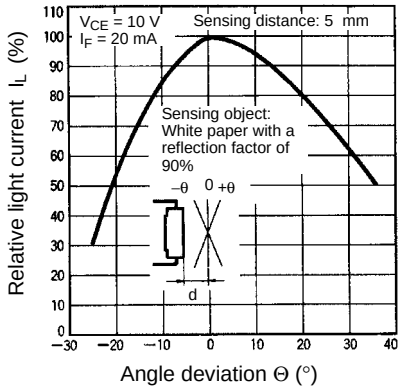

EE-SY171

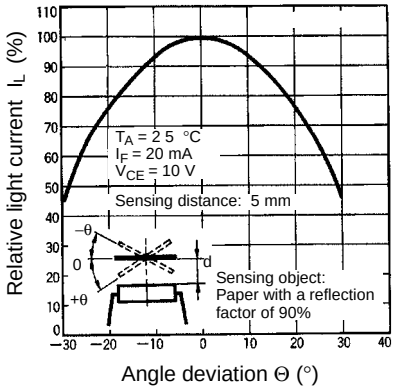

Dimensions

Unit: mm (inch)

■ EE-SY171

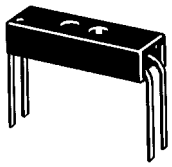

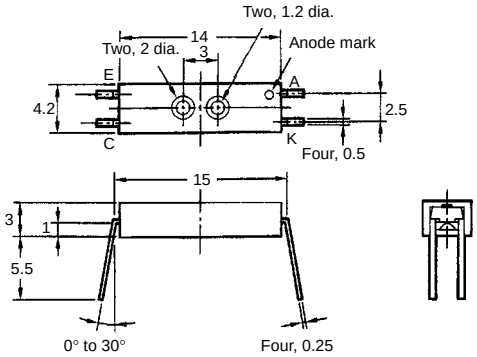

Internal Circuit
(All Models)

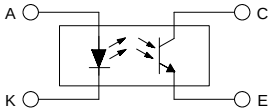

Terminal No.	Name
A	Anode
K	Cathode
C	Collector
E	Emitter

■ EE-SY113

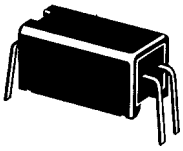

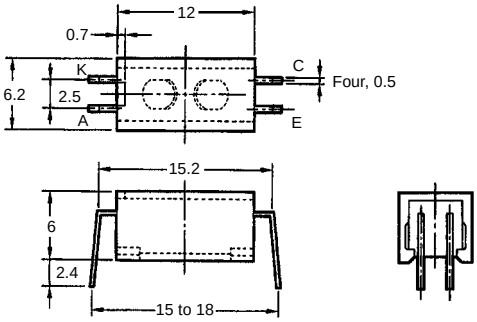

■ EE-SY110

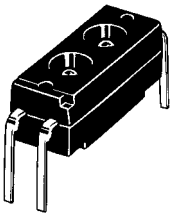

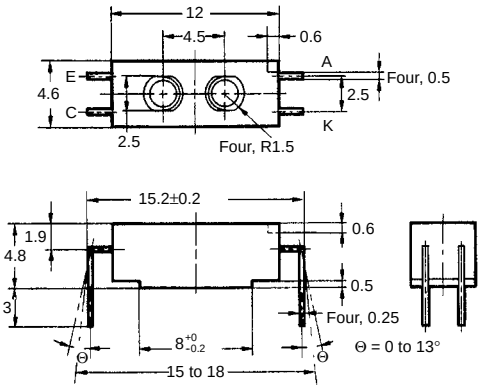

Precautions

Refer to the Technical Information Section for general precautions.

NOTE: DIMENSIONS SHOWN ARE IN MILLIMETERS. To convert millimeters to inches divide by 25.4.

OMRON®

OMRON ELECTRONICS, INC.
One East Commerce Drive
Schaumburg, IL 60173
1-800-55-OMRON

OMRON CANADA, INC.
885 Milner Avenue
Scarborough, Ontario M1B 5V8
416-286-6465

Cat. No. EO5DAX4 1/99 Specifications subject to change without notice. Printed in U.S.A.