查询ISL83387EIV供应商 捷多邦，专业PCB打样工厂，24小时加急出货

+/-15kV ESD Protected, +3V to +5.5V, 1Microamp, 250kbps, RS-232 Transceivers with Enhanced Automatic Powerdown and a Separate Logic Supply

The Intersil ISL83387E is a 3.0V to 5.5V powered RS-232 transceiver which meets EIA/TIA-232 and V.28/V.24 specifications, even at V_{CC} = 3.0V. Additionally, it provides ±15kV ESD protection (IEC61000-4-2 Air Gap and Human Body Model) on transmitter outputs and receiver inputs (RS-232 pins). Targeted applications are PDAs, Palmtops, and notebook and laptop computers where the low operational, and even lower standby power consumption is critical. Efficient on-chip charge pumps, coupled with manual and enhanced automatic powerdown functions, reduce the standby supply current to a 1µA trickle. TSSOP packaging, and the use of small, low value capacitors ensure board space savings as well. Data rates greater than 250kbps are guaranteed at worst case load conditions.

The ISL83387E features a V_L pin that adjusts the logic pin output levels and input thresholds to values compatible with the V_{CC} powering the external logic (e.g., a UART).

This device includes an ***enhanced automatic powerdown*** function which powers down the on-chip power-supply and driver circuits. This occurs when all receiver and transmitter inputs detect no signal transitions for a period of 30 seconds. It power back up, automatically, whenever it senses a transition on any transmitter or receiver input.

Table 1 summarizes the features of the ISL83387E, while Application Note AN9863 summarizes the features of each device comprising the 3V RS-232 family.

Ordering Information

PART NO. (BRAND)	TEMP. RANGE (°C)	PACKAGE	PKG. NO.
ISL83387EIV (83387EIV)	-40 to 85	24 Ld TSSOP	M24.173
ISL83387EIV-T (83387EIV)	-40 to 85	Tape and Reel	M24.173

Features

- V_L Supply Pin for Compatibility with Mixed Voltage Systems
- ESD Protection for RS-232 I/O Pins to ±15kV (IEC61000)
- Low Power, Pin Compatible Upgrade for MAX3387E
- Manual and Enhanced Automatic Powerdown Features
- Meets EIA/TIA-232 and V.28/V.24 Specifications at 3V
- On-Chip Charge Pumps Require Only Four External 0.1µF Capacitors
- Receivers Stay Active in Powerdown
- Very Low Supply Current 300µA
- Guaranteed Minimum Data Rate 250kbps
- Wide Power Supply Range . . . . . Single +3V to +5.5V
- Low Supply Current in Powerdown State. . . . . < 1µA

Applications

- Any System Requiring RS-232 Communication Ports
  - Battery Powered, Hand-Held, and Portable Equipment
  - Laptop Computers, Notebooks, Palmtops
  - Digital Cameras
  - PDA's and PDA Cradles
  - Cellular/Mobile Phones

TABLE 1. SUMMARY OF FEATURES

PART NUMBER	NO. OF Tx.	NO. OF Rx.	DATA RATE (kbps)	Rx. ENABLE FUNCTION?	V_L LOGIC SUPPLY PIN?	MANUAL POWER- DOWN?	ENHANCED AUTOMATIC POWERDOWN FUNCTION?
ISL83387E	3	3	250	NO	YES	YES	YES

找PDF 维库一下 pdf.dzsc.com

CAUTION: These devices are sensitive to electrostatic discharge; follow proper IC Handling Procedures.

Pinout

ISL83387E (TSSOP)
TOP VIEW

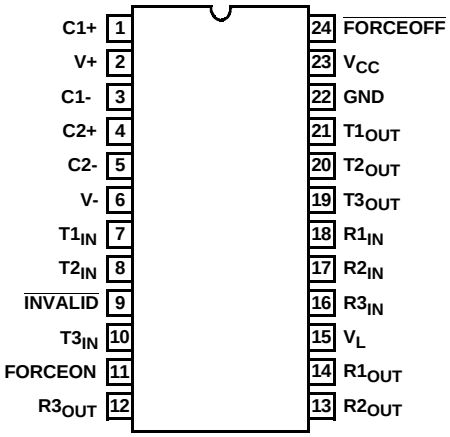

Pin Descriptions

PIN	FUNCTION
V_{CC}	System power supply input (3.0V to 5.5V).
V+	Internally generated positive transmitter supply (+5.5V).
V-	Internally generated negative transmitter supply (-5.5V).
GND	Ground connection.
C1+	External capacitor (voltage doubler) is connected to this lead.
C1-	External capacitor (voltage doubler) is connected to this lead.
C2+	External capacitor (voltage inverter) is connected to this lead.
C2-	External capacitor (voltage inverter) is connected to this lead.
T_{IN}	TTL/CMOS compatible transmitter Inputs. The switching point is a function of the V_L voltage.
T_{OUT}	±15kV ESD Protected, RS-232 level (nominally ±5.5V) transmitter outputs.
R_{IN}	±15kV ESD Protected, RS-232 compatible receiver inputs.
R_{OUT}	TTL/CMOS level receiver outputs. Swings between GND and V_L.
V_L	Logic-Level Supply. All TTL/CMOS inputs and outputs are powered by this supply.
$\overline{\text{INVALID}}$	Active low output that indicates if no valid RS-232 levels are present on any receiver input. Swings between GND and V_L.
$\overline{\text{FORCEOFF}}$	Active low to shut down transmitters and on-chip power supply. This overrides any automatic circuitry and FORCEON (see Table 2). The switching point is a function of the V_L voltage.
FORCEON	Active high input to override automatic powerdown circuitry thereby keeping transmitters active. ($\overline{\text{FORCEOFF}}$ must be high). The switching point is a function of the V_L voltage.

Typical Operating Circuit

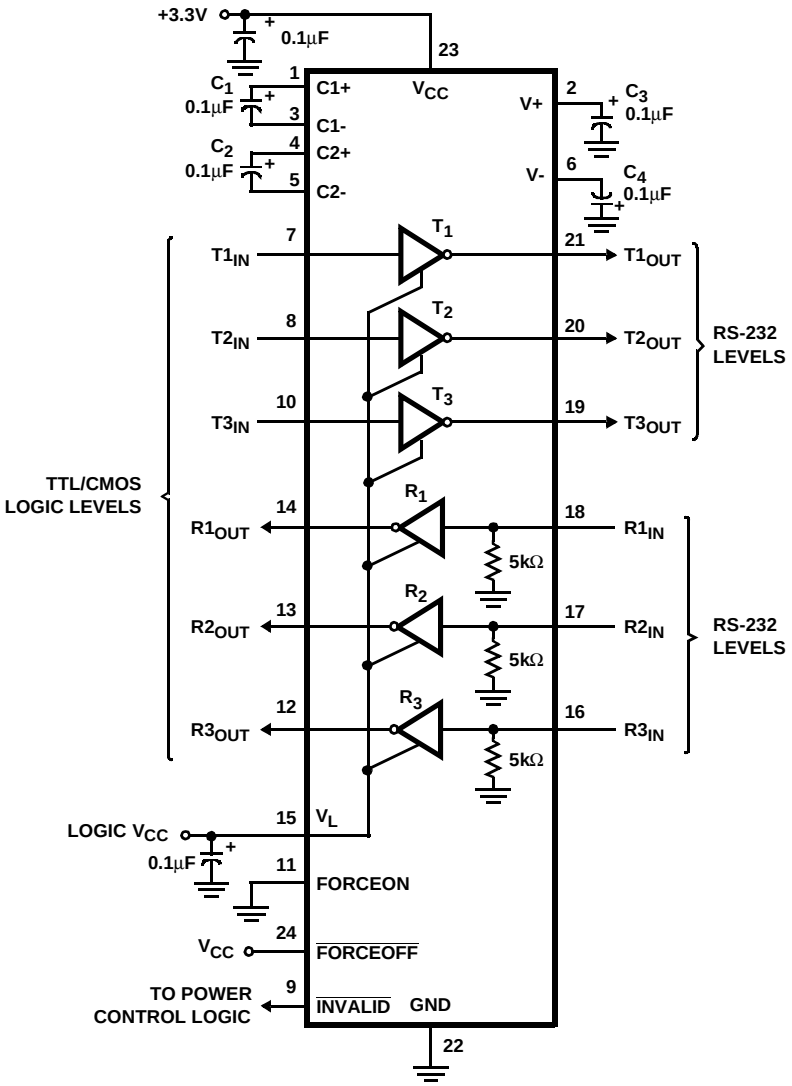

Absolute Maximum Ratings

V_{CC} to Ground . . . . . -0.3V to 6V
V_L to Ground . . . . . -0.3V to 7V
V+ to Ground . . . . . -0.3V to 7V
V- to Ground . . . . . +0.3V to -7V
V+ to V- 14V
Input Voltages
  T_{IN}, FORCEON, $\overline{\text{FORCEOFF}}$ . . . . . -0.3V to 6V
  R_{IN} . . . . . ±25V
Output Voltages
  T_{OUT} . . . . . ±13.2V
  R_{OUT}, $\overline{\text{INVALID}}$ . . . . . -0.3V to (V_L +0.3V)
Short Circuit Duration
  T_{OUT} . . . . . Continuous
ESD Rating . . . . . See Specification Table

Thermal Information

Thermal Resistance (Typical, Note 1) θ_{JA} ($^oC/W$)
  24 Ld TSSOP Package 140
Moisture Sensitivity (see Technical Brief TB363)
  TSSOP Package . . . . . Level 1
Maximum Junction Temperature (Plastic Package) . . . . . 150^oC
Maximum Storage Temperature Range . . . . . -65^oC to 150^oC
Maximum Lead Temperature (Soldering 10s) . . . . . 300^oC
  (Lead Tips Only)

Operating Conditions

Temperature Range
  ISL83387EIV . . . . . -40^oC to 85^oC

CAUTION: Stresses above those listed in "Absolute Maximum Ratings" may cause permanent damage to the device. This is a stress only rating and operation of the device at these or any other conditions above those indicated in the operational sections of this specification is not implied.

NOTE:

1. θ_{JA} is measured with the component mounted on a low effective thermal conductivity test board in free air. See Tech Brief TB379 for details.

Electrical Specifications

Test Conditions: V_{CC} = 3V to 5.5V, C_1 - C_4 = 0.1mF, V_L = V_{CC}; Unless Otherwise Specified. Typicals are at T_A = 25^oC, V_{CC} = V_L = 3.3V

PARAMETER	TEST CONDITIONS		TEMP (^oC)	MIN	TYP	MAX	UNITS
DC CHARACTERISTICS							
Supply Current, Automatic Powerdown	All R_{IN} Open, FORCEON = GND, $\overline{\text{FORCEOFF}}$ = V_{CC}		25	-	1	10	µA
Supply Current, Powerdown	$\overline{\text{FORCEOFF}}$ = GND		25	-	1	10	µA
Supply Current, Automatic Powerdown Disabled	All Outputs Unloaded, FORCEON = $\overline{\text{FORCEOFF}}$ = V_{CC}, V_{CC} = 3.15V		25	-	0.3	1	mA
LOGIC AND TRANSMITTER INPUTS							
Input Logic Threshold Low	T_{IN}, FORCEON, $\overline{\text{FORCEOFF}}$	V_L = 3.3V or 5V	Full	-	-	0.8	V
		V_L = 2.5V	Full	-	-	0.6	V
Input Logic Threshold High	T_{IN}, FORCEON, $\overline{\text{FORCEOFF}}$	V_L = 5V	Full	2.4	-	-	V
		V_L = 3.3V	Full	2.0	-	-	V
		V_L = 2.5V	Full	1.4	-	-	V
		V_L = 1.8V	25	-	0.9	-	V
Transmitter Input Hysteresis			25	-	0.5	-	V
Input Leakage Current	T_{IN}, FORCEON, $\overline{\text{FORCEOFF}}$		Full	-	±0.01	±1.0	µA
RECEIVER OUTPUTS							
Output Voltage Low	I_{OUT} = 1.6mA		Full	-	-	0.4	V
Output Voltage High	I_{OUT} = -1.0mA		Full	V_L - 0.6	V_L - 0.1	-	V
RECEIVER INPUTS							
Input Voltage Range			Full	-25	-	25	V
Input Threshold Low	V_{CC} = V_L = 5.0V		25	0.8	1.5	-	V
	V_{CC} = V_L = 3.3V		25	0.6	1.2	-	V
Input Threshold High	V_{CC} = V_L = 5.0V		25	-	1.8	2.4	V
	V_{CC} = V_L = 3.3V		25	-	1.5	2.4	V
Input Hysteresis			25	-	0.5	-	V
Input Resistance			25	3	5	7	kΩ

Electrical Specifications Test Conditions: V_{CC} = 3V to 5.5V, C_1 - C_4 = 0.1mF, V_L = V_{CC}; Unless Otherwise Specified. Typicals are at T_A = 25°C, V_{CC} = V_L = 3.3V **(Continued)**

PARAMETER	TEST CONDITIONS		TEMP (°C)	MIN	TYP	MAX	UNITS
TRANSMITTER OUTPUTS							
Output Voltage Swing	All Transmitter Outputs Loaded with 3kΩ to Ground		Full	±5.0	±5.4	-	V
Output Resistance	V_{CC} = V+ = V- = 0V, Transmitter Output = ±2V		Full	300	10M	-	Ω
Output Short-Circuit Current	V_{OUT} = 0V		Full	-	±35	±60	mA
Output Leakage Current	V_{OUT} = ±12V, V_{CC} = 0V or 3V to 5.5V Automatic Powerdown or $\overline{\text{FORCEOFF}}$ = GND		Full	-	-	±25	µA
ENHANCED AUTOMATIC POWERDOWN (FORCEON = GND, $\overline{\text{FORCEOFF}}$ = V_{CC})							
Receiver Input Thresholds to $\overline{\text{INVALID}}$ High	See Figure 4		Full	-2.7	-	2.7	V
Receiver Input Thresholds to $\overline{\text{INVALID}}$ Low	See Figure 4		Full	-0.3	-	0.3	V
$\overline{\text{INVALID}}$ Output Voltage Low	I_{OUT} = 1.6mA		Full	-	-	0.4	V
$\overline{\text{INVALID}}$ Output Voltage High	I_{OUT} = -1.0mA		Full	V_L - 0.6	-	-	V
Receiver Positive or Negative Threshold to $\overline{\text{INVALID}}$ High Delay (t_{INVH})	See Figure 7		25	-	1	-	µs
Receiver Positive or Negative Threshold to $\overline{\text{INVALID}}$ Low Delay (t_{INVL})	See Figure 7		25	-	30	-	µs
Receiver or Transmitter Edge to Transmitters Enabled Delay (t_{WU})	Note 2, See Figure 7		25	-	100	-	µs
Receiver or Transmitter Edge to Transmitters Disabled Delay ($t_{AUTOPWDN}$)	Note 2, See Figure 7		Full	15	30	60	sec
TIMING CHARACTERISTICS							
Maximum Data Rate	R_L = 3kΩ, C_L = 1000pF, One Transmitter Switching		Full	250	500	-	kbps
Receiver Propagation Delay	Receiver Input to Receiver Output, C_L = 150pF	t_{PHL}	25	-	0.15	-	µs
		t_{PLH}	25	-	0.15	-	µs
Time to Exit Powerdown	T_X | V_{OUT} | ≥ 3.7V		25	-	100	-	µs
Transmitter Skew	t_{PHL} - t_{PLH}		25	-	100	-	ns
Receiver Skew	t_{PHL} - t_{PLH}		25	-	50	-	ns
Transition Region Slew Rate	V_{CC} = 3.3V, R_L = 3kΩ to 7kΩ, Measured From 3V to -3V or -3V to 3V	C_L = 150pF to 1000pF	25	6	18	30	V/µs
		C_L = 150pF to 2500pF	25	4	13	30	V/µs
ESD PERFORMANCE							
RS-232 Pins (T_{OUT}, R_{IN})	Human Body Model		25	-	±15	-	kV
	IEC61000-4-2 Air Gap Discharge		25	-	±15	-	kV
	IEC61000-4-2 Contact Discharge		25	-	±8	-	kV

NOTE:

2. An “edge” is defined as a transition through the transmitter or receiver input thresholds.

Detailed Description

The ISL83387E operates from a single +3V to +5.5V supply, guarantees a 250kbps minimum data rate, requires only four small external 0.1µF capacitors, features low power consumption, and meets all EIA RS-232C and V.28 specifications. The circuit is divided into three sections: The charge pump, the transmitters, and the receivers.

Charge-Pump

Intersil's new ISL83387E utilizes regulated on-chip dual charge pumps as voltage doublers, and voltage inverters to generate ±5.5V transmitter supplies from a V_{CC} supply as low as 3.0V. This allows these devices to maintain RS-232 compliant output levels over the ±10% tolerance range of 3.3V powered systems. The efficient on-chip power supplies require only four small, external 0.1µF capacitors for the voltage doubler and inverter functions over the full V_{CC} range; other capacitor combinations can be used as shown in Table 3. The charge pumps operate discontinuously (i.e., they turn off as soon as the V+ and V- supplies are pumped up to the nominal values), resulting in significant power savings.

Transmitters

The transmitters are proprietary, low dropout, inverting drivers that translate TTL/CMOS inputs to EIA/TIA-232 output levels. Coupled with the on-chip ±5.5V supplies, these transmitters deliver true RS-232 levels over a wide range of single supply system voltages.

All transmitter outputs disable and assume a high impedance state when the device enters the powerdown mode (see Table 2). These outputs may be driven to ±12V when disabled.

All devices guarantee a 250kbps data rate for full load conditions (3kΩ and 1000pF), $V_{CC} \geq 3.0V$, with one transmitter operating at full speed. Under more typical conditions of $V_{CC} \geq 3.3V$, $R_L = 3k\Omega$, and $C_L = 250pF$, one transmitter easily operates at 1.25Mbps.

The transmitter input threshold is set by the voltage applied to the V_L supply pin. Transmitter inputs float if left unconnected (there are no pull-up resistors), and may cause I_{CC} increases. Connect unused inputs to GND for the best performance.

Receivers

The ISL83387E contains standard inverting receivers that convert RS-232 signals to CMOS output levels and accept inputs up to ±25V while presenting the required 3kΩ to 7kΩ input impedance (see Figure 1) even if the power is off (V_{CC} = 0V). The receivers' Schmitt trigger input stage uses hysteresis to increase noise immunity and decrease errors due to slow input signal transitions. Receiver outputs swing from GND to V_L, and do not tristate in powerdown (see Table 2).

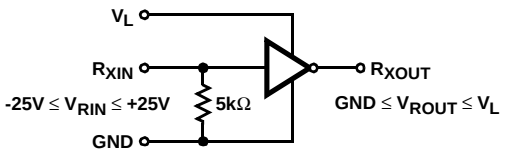

FIGURE 1. RECEIVER CONNECTIONS

Low Power Operation

This 3V device requires a nominal supply current of 0.3mA, even at V_{CC} = 5.5V, during normal operation (not in powerdown mode). This is considerably less than the 11mA current required by comparable 5V RS-232 devices, allowing users to reduce system power simply by replacing the old style device with the ISL83387E in new designs.

Powerdown Functionality

The already low current requirement drops significantly when the device enters powerdown mode. In powerdown, supply current drops to 1µA, because the on-chip charge pump turns off (V+ collapses to V_{CC}, V- collapses to GND), and the transmitter outputs tristate. This micro-power mode makes these devices ideal for battery powered and portable applications.

Software Controlled (Manual) Powerdown

This device allows the user to force the IC into the low power, standby state, and utilizes a two pin approach where the FORCEON and $\overline{\text{FORCEOFF}}$ inputs determine the IC's mode. For always enabled operation, FORCEON and $\overline{\text{FORCEOFF}}$ are both strapped high. To switch between active and powerdown modes, under logic or software control, only the $\overline{\text{FORCEOFF}}$ input need be driven. The FORCEON state isn't critical, as $\overline{\text{FORCEOFF}}$ dominates over FORCEON. Nevertheless, if strictly manual control over powerdown is desired, the user must strap FORCEON high to disable the enhanced automatic powerdown circuitry.

Connecting $\overline{\text{FORCEOFF}}$ and FORCEON together disables the enhanced automatic powerdown feature, enabling them to function as a manual $\overline{\text{SHUTDOWN}}$ input (see Figure 2).

With any of the above control schemes, the time required to exit powerdown, and resume transmission is only 100µs.

When using both manual and enhanced automatic powerdown (FORCEON = 0), the ISL83387E won't power up from manual powerdown until both $\overline{\text{FORCEOFF}}$ and FORCEON are driven high, or until a transition occurs on a receiver or transmitter input. Figure 3 illustrates a circuit for ensuring that the ISL83387E powers up as soon as $\overline{\text{FORCEOFF}}$ switches high. The rising edge of the Master Powerdown signal forces the device to power up, and the ISL83387E returns to enhanced automatic powerdown

TABLE 2. POWERDOWN LOGIC TRUTH TABLE

RCVR OR XMTR EDGE WITHIN 30 SEC?	$\overline{\text{FORCEOFF}}$ INPUT	FORCEON INPUT	TRANSMITTER OUTPUTS	RECEIVER OUTPUTS	RS-232 LEVEL PRESENT AT RECEIVER INPUT?	$\overline{\text{INVALID}}$ OUTPUT	MODE OF OPERATION
NO	H	H	Active	Active	NO	L	Normal Operation (Enhanced Auto Powerdown Disabled)
NO	H	H	Active	Active	YES	H	
YES	H	L	Active	Active	NO	L	Normal Operation (Enhanced Auto Powerdown Enabled)
YES	H	L	Active	Active	YES	H	
NO	H	L	High-Z	Active	NO	L	Powerdown Due to Enhanced Auto Powerdown Logic
NO	H	L	High-Z	Active	YES	H	
X	L	X	High-Z	Active	NO	L	Manual Powerdown
X	L	X	High-Z	Active	YES	H	
$\overline{\text{INVALID}}$ DRIVING FORCEON AND $\overline{\text{FORCEOFF}}$ (EMULATES AUTOMATIC POWERDOWN)							
X	NOTE 3	NOTE 3	Active	Active	YES	H	Normal Operation
X	NOTE 3	NOTE 3	High-Z	Active	NO	L	Forced Auto Powerdown

NOTES:

3. Input is connected to $\overline{\text{INVALID}}$ Output.

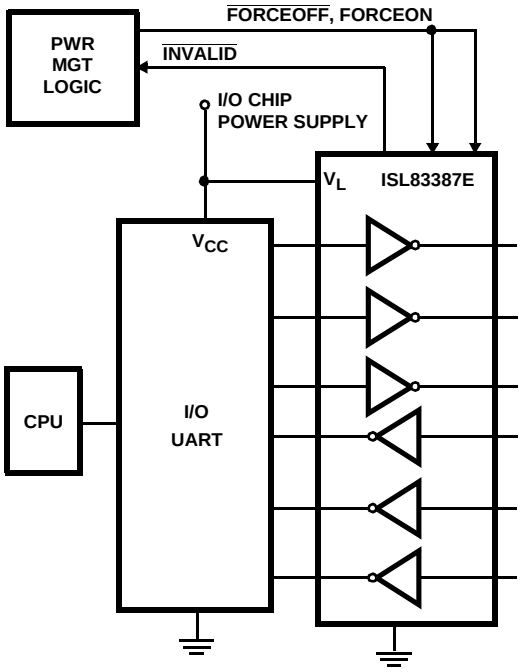

FIGURE 2. CONNECTIONS FOR MANUAL POWERDOWN

mode an RC time constant after this rising edge. The time constant isn't critical, because the ISL83387E remains powered up for 30 seconds after the FORCEON falling edge, even if there are no signal transitions. This gives slow-to-wake systems (e.g., a mouse) plenty of time to start transmitting, and as long as it starts transmitting within 30 seconds both systems remain enabled.

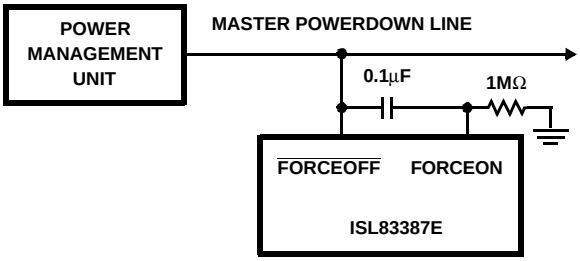

FIGURE 3. CIRCUIT TO ENSURE IMMEDIATE POWER UP WHEN EXITING FORCED POWERDOWN

V_L Logic Supply Input

Unlike other RS-232 interface devices where the CMOS outputs swing between 0 and V_{CC}, the ISL83387E features a separate logic supply input (V_L; 1.8V to 5V, regardless of V_{CC}) that sets V_{OH} for the receiver and $\overline{\text{INVALID}}$ outputs. Connecting V_L to a host logic supply lower than V_{CC}, prevents the ISL83387E outputs from forward biasing the input diodes of a logic device powered by that lower supply. Connecting V_L to a logic supply greater than V_{CC} ensures that the receiver and $\overline{\text{INVALID}}$ output levels are compatible even with the CMOS input V_{IH} of AC, HC, and CD4000 devices. Note that the V_L supply current increases to 100µA with V_L = 5V and V_{CC} = 3.3V (see Figure 16). V_L also powers the transmitter and logic inputs, thereby setting their switching thresholds to levels compatible with the logic supply. This separate logic supply pin allows a great deal of flexibility in interfacing to systems with different logic supplies. If logic translation isn't required, connect V_L to the ISL83387E V_{CC}.

$\overline{\text{INVALID}}$ Output

The $\overline{\text{INVALID}}$ output always indicates (see Table 2) whether or not 30µs have elapsed with invalid RS-232 signals (see

Figures 4 and 7) persisting on all of the receiver inputs, giving the user an easy way to determine when the interface block should power down. Invalid receiver levels occur whenever the driving peripheral's outputs are shut off (powered down) or when the RS-232 interface cable is disconnected. In the case of a disconnected interface cable where all the receiver inputs are floating (but pulled to GND by the internal receiver pull down resistors), the $\overline{\text{INVALID}}$ logic detects the invalid levels and drives the output low. The power management logic then uses this indicator to power down the interface block. Reconnecting the cable restores valid levels at the receiver inputs, $\overline{\text{INVALID}}$ switches high, and the power management logic wakes up the interface block. $\overline{\text{INVALID}}$ can also be used to indicate the DTR or RING INDICATOR signal, as long as the other receiver inputs are floating, or driven to GND (as in the case of a powered down driver).

$\overline{\text{INVALID}}$ switches high 1µs after detecting a valid RS-232 level on a receiver input. $\overline{\text{INVALID}}$ operates in all modes (forced or automatic powerdown, or forced on), so it is also useful for systems employing manual powerdown circuitry.

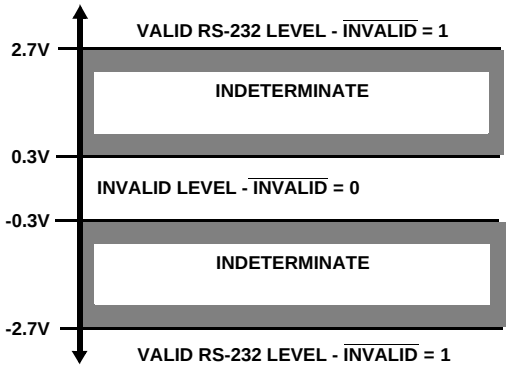

FIGURE 4. DEFINITION OF VALID RS-232 RECEIVER LEVELS

Enhanced Automatic Powerdown

Even greater power savings is available by using the *enhanced automatic* powerdown function. When the enhanced powerdown logic determines that no transitions have occurred on any of the transmitter nor receiver inputs for 30 seconds, the charge pump and transmitters powerdown, thereby reducing supply current to 1µA. The ISL83387E automatically powers back up whenever it detects a transition on one of these inputs. This automatic powerdown feature provides additional system power savings without changes to the existing operating system.

Enhanced automatic powerdown operates when the FORCEON input is low, and the $\overline{\text{FORCEOFF}}$ input is high. Tying FORCEON high disables automatic powerdown, but manual powerdown is always available via the overriding $\overline{\text{FORCEOFF}}$ input. Table 2 summarizes the enhanced automatic powerdown functionality.

Figure 5 illustrates the enhanced powerdown control logic. Note that once the ISL83387E enters powerdown (manually or automatically), the 30 second timer remains timed out (set), keeping the ISL83387E powered down until FORCEON transitions high, or until a transition occurs on a receiver or transmitter input.

As stated previously, the $\overline{\text{INVALID}}$ output switches low whenever invalid levels have persisted on all of the receiver inputs for more than 30µs (see Figure 7), but this has no direct effect on the state of the ISL83387E (see the next sections for methods of utilizing $\overline{\text{INVALID}}$ to power down the device).

The time to recover from automatic powerdown mode is typically 100µs.

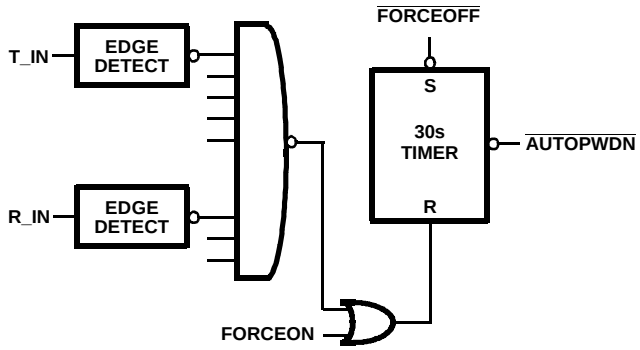

FIGURE 5. ENHANCED AUTOMATIC POWERDOWN LOGIC

Emulating Standard Automatic Powerdown

If enhanced automatic powerdown isn't desired, the user can implement the standard automatic powerdown feature (mimics the function on the ICL3221E/23E/43E) by connecting the $\overline{\text{INVALID}}$ output to the FORCEON and $\overline{\text{FORCEOFF}}$ inputs, as shown in Figure 6. After 30µs of

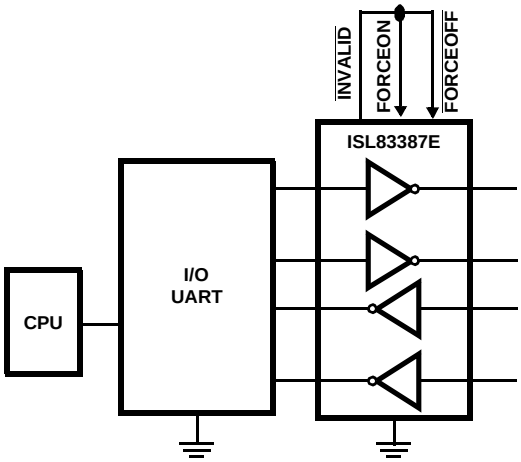

FIGURE 6. CONNECTIONS FOR AUTOMATIC POWERDOWN WHEN NO VALID RECEIVER SIGNALS ARE PRESENT

invalid receiver levels, $\overline{\text{INVALID}}$ switches low and drives the ISL83387E into a forced powerdown condition. $\overline{\text{INVALID}}$ switches high as soon as a receiver input senses a valid

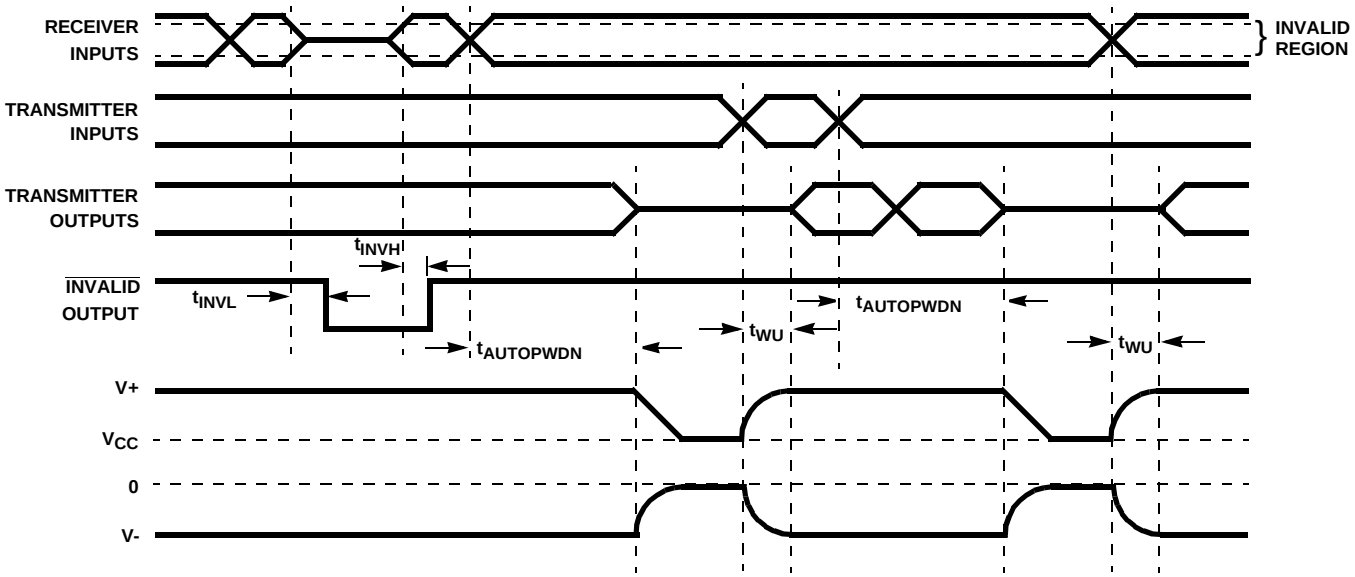

FIGURE 7. ENHANCED AUTOMATIC POWERDOWN AND $\overline{INVALID}$ TIMING DIAGRAMS

RS-232 level, forcing the ISL83387E to power on. See the "$\overline{INVALID}$ DRIVING FORCEON AND $\overline{FORCEOFF}$" section of Table 2 for an operational summary. This operational mode is perfect for handheld devices that communicate with another computer via a detachable cable. Detaching the cable allows the internal receiver pull-down resistors to pull the inputs to GND (an invalid RS-232 level), causing the 30µs timer to time-out and drive the IC into powerdown. Reconnecting the cable restores valid levels, causing the IC to power back up.

Hybrid Automatic Powerdown Options

For devices which communicate only through a detachable cable, connecting $\overline{INVALID}$ to $\overline{FORCEOFF}$ (with FORCEON = 0) may be a desirable configuration. While the cable is attached $\overline{INVALID}$ and $\overline{FORCEOFF}$ remain high, so the enhanced automatic powerdown logic powers down the RS-232 device whenever there is 30 seconds of inactivity on the receiver and transmitter inputs. Detaching the cable allows the receiver inputs to drop to an invalid level (GND), so $\overline{INVALID}$ switches low and forces the RS-232 device to power down. The ISL83387E remains powered down until the cable is reconnected ($\overline{INVALID}$ = $\overline{FORCEOFF}$ = 1) and a transition occurs on a receiver or transmitter input (see Figure 5). For immediate power up when the cable is reattached, connect FORCEON to $\overline{FORCEOFF}$ through a network similar to that shown in Figure 3.

Capacitor Selection

The ISL83387E charge pumps require only 0.1µF capacitors for the full operational voltage range. Table 3 lists other acceptable capacitor values for various supply voltage ranges. Do not use values smaller than those listed in Table 3. Increasing the capacitor values (by a factor of 2) reduces ripple on the transmitter outputs and slightly reduces power consumption.

TABLE 3. REQUIRED CAPACITOR VALUES

V_{CC} (V)	C_1 (µF)	C_2, C_3, C_4 (µF)
3.0 to 3.6	0.1	0.1
4.5 to 5.5	0.047	0.33
3.0 to 5.5	0.22	1

When using minimum required capacitor values, make sure that capacitor values do not degrade excessively with temperature. If in doubt, use capacitors with a larger nominal value. The capacitor's equivalent series resistance (ESR) usually rises at low temperatures and it influences the amount of ripple on V+ and V-.

Power Supply Decoupling

In most circumstances a 0.1µF bypass capacitor is adequate. In applications that are particularly sensitive to power supply noise, decouple V_{CC} to ground with a capacitor of the same value as the charge-pump capacitor C_1. Connect the bypass capacitor as close as possible to the IC.

Transmitter Outputs when Exiting Powerdown

Figure 8 shows the response of two transmitter outputs when exiting powerdown mode. As they activate, the two transmitter outputs properly go to opposite RS-232 levels, with no glitching, ringing, nor undesirable transients. Each transmitter is loaded with 3kΩ in parallel with 2500pF. Note that the transmitters enable only when the magnitude of the supplies exceed approximately 3V.

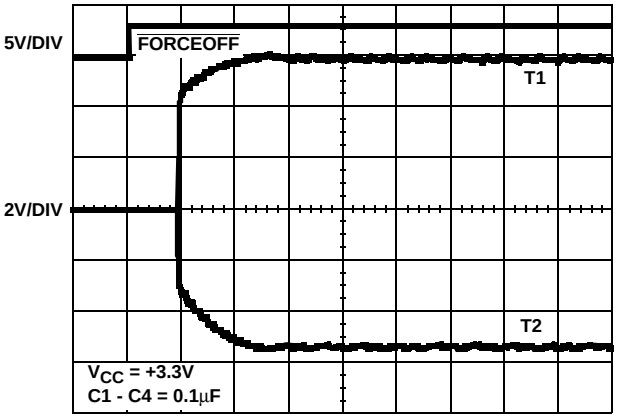

FIGURE 8. TRANSMITTER OUTPUTS WHEN EXITING POWERDOWN

High Data Rates

The ISL83387E maintains the RS-232 ±5V minimum transmitter output voltages even at high data rates. Figure 9 details a transmitter loopback test circuit, and Figure 10 illustrates the loopback test result at 120kbps. For this test, all transmitters were simultaneously driving RS-232 loads in parallel with 1000pF, at 120kbps. Figure 11 shows the loopback results for a single transmitter driving 1000pF and an RS-232 load at 250kbps. The static transmitters were also loaded with an RS-232 receiver.

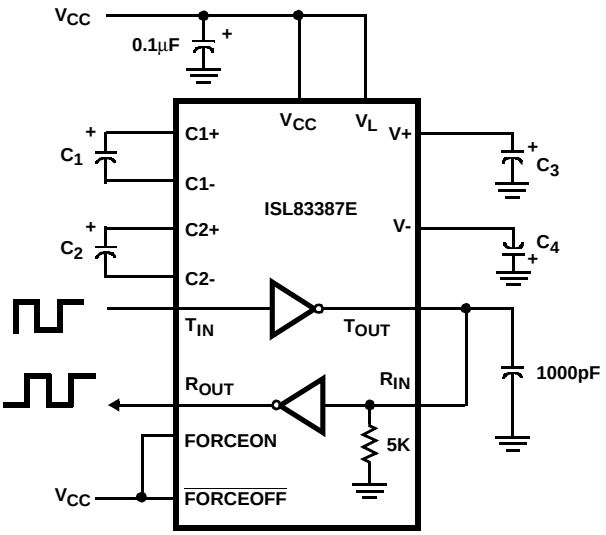

FIGURE 9. TRANSMITTER LOOPBACK TEST CIRCUIT

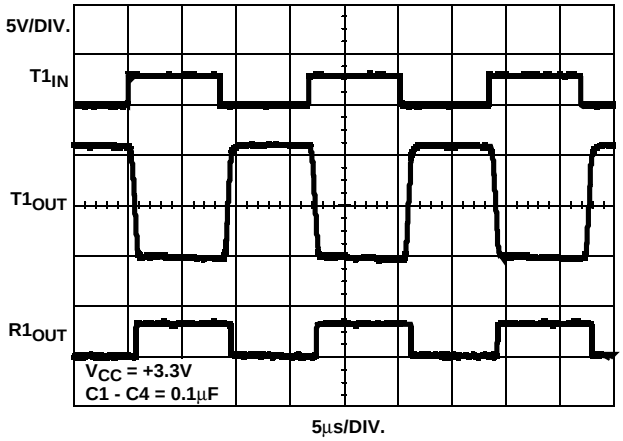

FIGURE 10. LOOPBACK TEST AT 120kbps

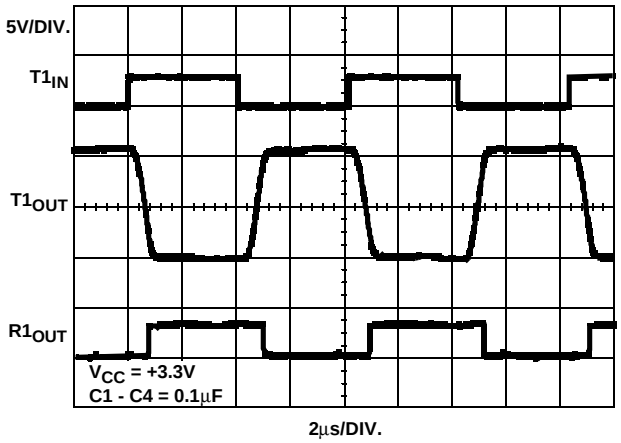

FIGURE 11. LOOPBACK TEST AT 250kbps

Interconnection with 3V and 5V Logic

Standard 3.3V powered RS-232 devices interface well with 3V and 5V powered TTL compatible logic families (e.g., ACT and HCT), but the logic outputs (e.g., R_{OUTS}) fail to reach the V_{IH} level of 5V powered CMOS families like HC, AC, and CD4000. The ISL83387E V_L supply pin solves this problem. By connecting V_L to the same supply (1.8V to 5V) powering the logic device, the ISL83387E logic outputs will swing from GND to the logic V_{CC}.

±15kV ESD Protection

All pins on the 3V interface devices include ESD protection structures, but the ISL83387E incorporates advanced structures which allow the RS-232 pins (transmitter outputs and receiver inputs) to survive ESD events up to ±15kV. The RS-232 pins are particularly vulnerable to ESD damage because they typically connect to an exposed port on the exterior of the finished product. Simply touching the port pins, or connecting a cable, can cause an ESD event that might destroy unprotected ICs. These new ESD structures protect the device whether or not it is powered up, protect

without allowing any latchup mechanism to activate, and don't interfere with RS-232 signals as large as ±25V.

Human Body Model (HBM) Testing

As the name implies, this test method emulates the ESD event delivered to an IC during human handling. The tester delivers the charge through a 1.5kΩ current limiting resistor, making the test less severe than the IEC61000 test which utilizes a 330Ω limiting resistor. The HBM method determines an ICs ability to withstand the ESD transients typically present during handling and manufacturing. Due to the random nature of these events, each pin is tested with respect to all other pins. The RS-232 pins on "E" family devices can withstand HBM ESD events to ±15kV.

IEC61000-4-2 Testing

The IEC61000 test method applies to finished equipment, rather than to an individual IC. Therefore, the pins most likely to suffer an ESD event are those that are exposed to the outside world (the RS-232 pins in this case), and the IC is tested in its typical application configuration (power applied) rather than testing each pin-to-pin combination. The lower current limiting resistor coupled with the larger charge storage capacitor yields a test that is much more severe than the HBM test. The extra ESD protection built into this device's RS-232 pins allows the design of equipment meeting level 4 criteria without the need for additional board level protection on the RS-232 port.

AIR-GAP DISCHARGE TEST METHOD

For this test method, a charged probe tip moves toward the IC pin until the voltage arcs to it. The current waveform delivered to the IC pin depends on approach speed, humidity, temperature, etc., so it is difficult to obtain repeatable results. The "E" device RS-232 pins withstand ±15kV air-gap discharges.

CONTACT DISCHARGE TEST METHOD

During the contact discharge test, the probe contacts the tested pin before the probe tip is energized, thereby eliminating the variables associated with the air-gap discharge. The result is a more repeatable and predictable test, but equipment limits prevent testing devices at voltages higher than ±8kV. All "E" family devices survive ±8kV contact discharges on the RS-232 pins.

Typical Performance Curves $V_{CC} = V_L = 3.3V$, $T_A = 25^oC$

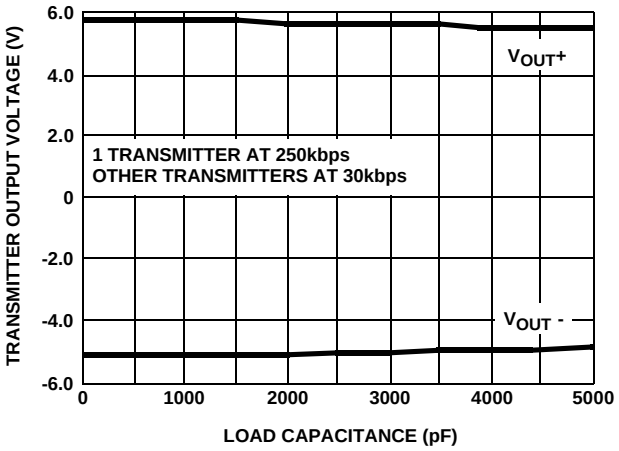

FIGURE 12. TRANSMITTER OUTPUT VOLTAGE vs LOAD CAPACITANCE

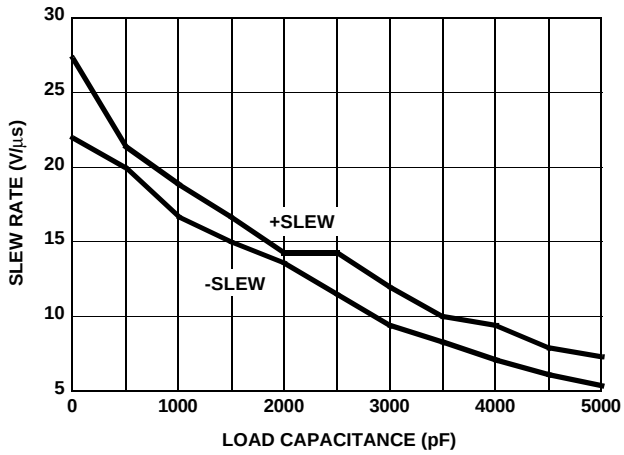

FIGURE 13. SLEW RATE vs LOAD CAPACITANCE

Typical Performance Curves $V_{CC} = V_L = 3.3V$, $T_A = 25^oC$ (Continued)

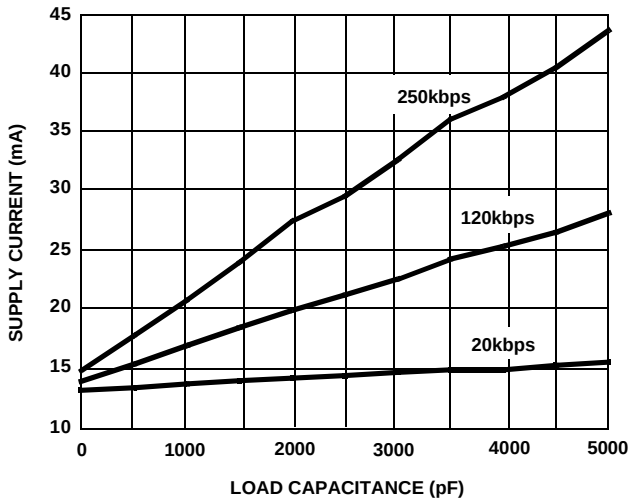

FIGURE 14. SUPPLY CURRENT vs LOAD CAPACITANCE WHEN TRANSMITTING DATA

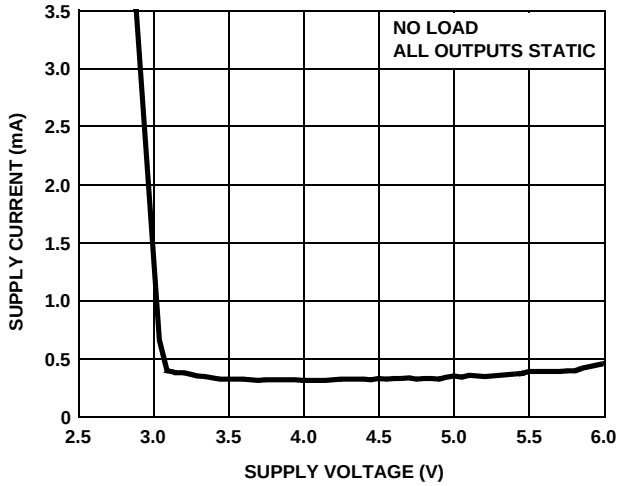

FIGURE 15. SUPPLY CURRENT vs SUPPLY VOLTAGE

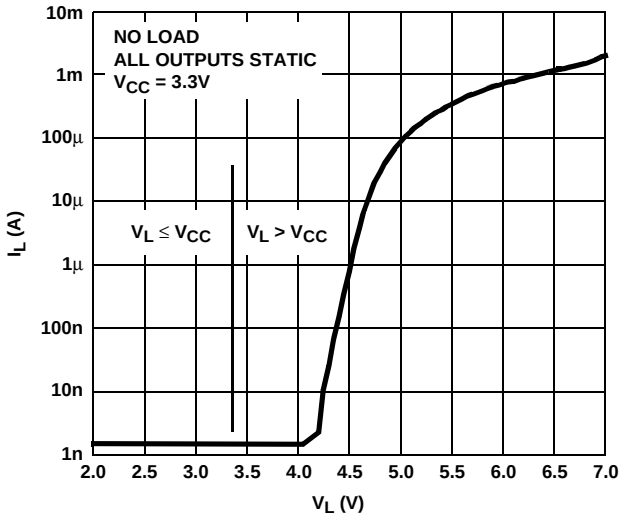

FIGURE 16. V_L SUPPLY CURRENT vs V_L VOLTAGE

Die Characteristics

SUBSTRATE POTENTIAL (POWERED UP)

GND

TRANSISTOR COUNT

ISL83387E: 1063

PROCESS

Si Gate CMOS

Thin Shrink Small Outline Plastic Packages (TSSOP)

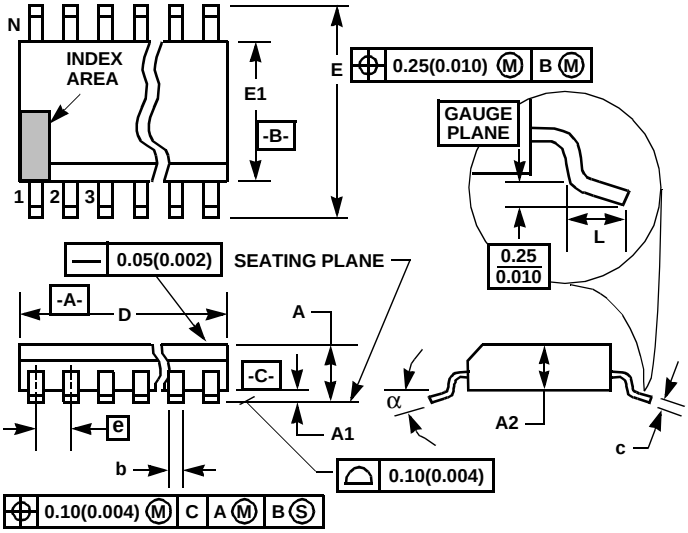

NOTES:

1. These package dimensions are within allowable dimensions of JEDEC MO-153-AD, Issue E.
2. Dimensioning and tolerancing per ANSI Y14.5M-1982.
3. Dimension “D” does not include mold flash, protrusions or gate burrs. Mold flash, protrusion and gate burrs shall not exceed 0.15mm (0.006 inch) per side.
4. Dimension “E1” does not include interlead flash or protrusions. Interlead flash and protrusions shall not exceed 0.15mm (0.006 inch) per side.
5. The chamfer on the body is optional. If it is not present, a visual index feature must be located within the crosshatched area.
6. “L” is the length of terminal for soldering to a substrate.
7. “N” is the number of terminal positions.
8. Terminal numbers are shown for reference only.
9. Dimension “b” does not include dambar protrusion. Allowable dambar protrusion shall be 0.08mm (0.003 inch) total in excess of “b” dimension at maximum material condition. Minimum space between protrusion and adjacent lead is 0.07mm (0.0027 inch).
10. Controlling dimension: MILLIMETER. Converted inch dimensions are not necessarily exact. (Angles in degrees)

M24.173

24 LEAD THIN SHRINK SMALL OUTLINE PLASTIC PACKAGE

SYMBOL	INCHES		MILLIMETERS		NOTES
	MIN	MAX	MIN	MAX	
A	-	0.047	-	1.20	-
A1	0.002	0.006	0.05	0.15	-
A2	0.031	0.051	0.80	1.05	-
b	0.0075	0.0118	0.19	0.30	9
c	0.0035	0.0079	0.09	0.20	-
D	0.303	0.311	7.70	7.90	3
E1	0.169	0.177	4.30	4.50	4
e	0.026 BSC		0.65 BSC		-
E	0.246	0.256	6.25	6.50	-
L	0.0177	0.0295	0.45	0.75	6
N	24		24		7
α	0°	8°	0°	8°	-

Rev. 0 6/98

All Intersil U.S. products are manufactured, assembled and tested utilizing ISO9000 quality systems.
Intersil Corporation’s quality certifications can be viewed at www.intersil.com/design/quality

Intersil products are sold by description only. Intersil Corporation reserves the right to make changes in circuit design, software and/or specifications at any time without notice. Accordingly, the reader is cautioned to verify that data sheets are current before placing orders. Information furnished by Intersil is believed to be accurate and reliable. However, no responsibility is assumed by Intersil or its subsidiaries for its use; nor for any infringements of patents or other rights of third parties which may result from its use. No license is granted by implication or otherwise under any patent or patent rights of Intersil or its subsidiaries.

For information regarding Intersil Corporation and its products, see www.intersil.com