查询MAX631供应商 捷多邦，专业PCB打样工厂，24小时加急出货

19-0916; Rev 0; 3/90

MAXIM

CMOS Fixed/Adjustable Output Step-Up Switching Regulators

MAX631/632/633

General Description

The MAX631, MAX632, and MAX633 are +5V, +12V, and +15V fixed output, step-up DC-DC converters for use in low-power, high-efficiency switching regulator applications. The only external components required are an output filter capacitor and a low-cost inductor. Included on-chip are low battery detection circuitry and a charge pump output for generating a negative voltage in dual-supply applications.

Though most simply used as fixed output regulators, the MAX631/632/633 can also be set for other output voltages by adding an external voltage divider.

Maxim manufactures a broad line of step-up, step-down, and inverting DC-DC converters, with features such as logic-level shutdown, adjustable oscillator frequency, and external MOSFET drive.

Applications

Minimum Component, High-Efficiency DC-DC Converters

Portable Instruments

Rechargeable and Primary Battery Power Conversion

Uninterruptable On-Board Power Supplies

Card Level Multiple Power Conversion

Features

- ♦ Fixed +5V, +12V, +15V Output Voltages
- ♦ Adjustable Output with 2 Resistors
- ♦ 80% Typ Efficiency
- ♦ Only 2 External Components
- ♦ Charge Pump for Negative Output
- ♦ 135µA Typ Operating Current

Ordering Information

PART*	TEMP. RANGE	PIN-PACKAGE
MAX631XCPA	0°C to +70°C	8 Plastic DIP
MAX631XCSA	0°C to +70°C	8 Narrow SO
MAX631XC/D	0°C to +70°C	Dice
MAX631XEPA	-40°C to +85°C	8 Plastic DIP
MAX631XESA	-40°C to +85°C	8 Narrow SO
MAX631XEJA	-40°C to +85°C	8 CERDIP
MAX631XMJA	-55°C to +125°C	8 CERDIP
MAX632XCPA	0°C to +70°C	8 Plastic DIP
MAX632XCSA	0°C to +70°C	8 Narrow SO
MAX632XC/D	0°C to +70°C	Dice
MAX632XEPA	-40°C to +85°C	8 Plastic DIP
MAX632XESA	-40°C to +85°C	8 Narrow SO
MAX632XEJA	-40°C to +85°C	8 CERDIP
MAX632XMJA	-55°C to +125°C	8 CERDIP

* X = A for 5% Output Accuracy. X = B for 10% Accuracy.
Ordering Information continued on last page.

Pin Configuration

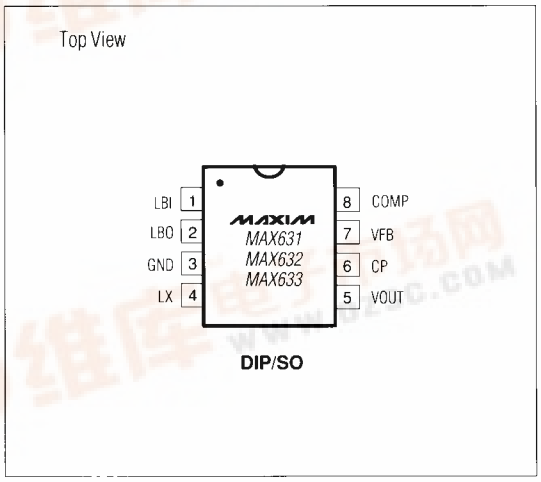

Typical Operating Circuit

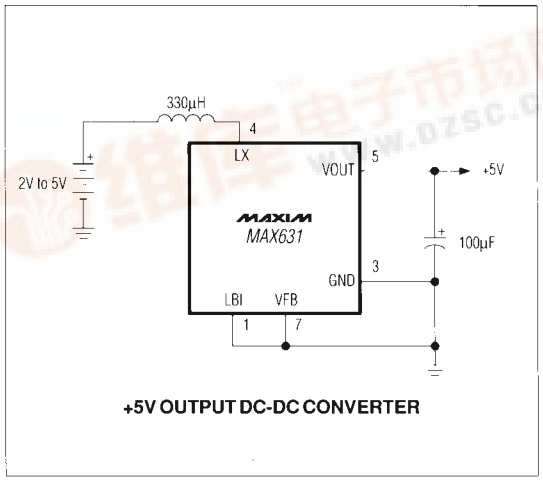

+5V OUTPUT DC-DC CONVERTER

Call toll free 1-800-998-8800 for free samples or literature.

找PDF 维库一下 pdf.dzsc.com

CMOS Fixed/Adjustable Output Step-Up Switching Regulators

ABSOLUTE MAXIMUM RATINGS

Supply Voltage, VOUT ..... +18V
Output Voltage, LX and LBO ..... +18V
Input Voltage, LBI and VFB ..... -0.3V to (VOUT + 0.3V)
LX Output Current ..... 450mA Peak
LBO Output Current 50mA
Power Dissipation
  Plastic DIP (derate 8.33mW/°C above +50°C) 625mW
  SO (derate 6mW/°C above +50°C) 450mW
  CERDIP (derate 8mW/°C above +50°C) 800mW

Operating Temperature Range
  MAX63_XC ..... 0°C to +70°C
  MAX63_XE ..... -40°C to +85°C
  MAX63_XM ..... -55°C to +125°C
Storage Temperature ..... -65°C to +160°C
Lead Temperature (Soldering, 10 sec.) ..... +300°C

Stresses beyond those listed under "Absolute Maximum Ratings" may cause permanent damage to the device. These are stress ratings only, and functional operation of the device at these or any other conditions beyond those indicated in the operational sections of the specifications is not implied. Exposure to absolute maximum rating conditions for extended periods may affect device reliability.

ELECTRICAL CHARACTERISTICS

(T_A = +25°C, unless otherwise noted.)

PARAMETER	SYMBOL	CONDITIONS	MIN	TYP	MAX	UNITS
Operating Voltage Range		Voltage at VOUT Over Temperature (C, E) Over Temperature (M)	 2.0 2.4		 16.5 16.5	V
Start-up Voltage		Voltage at VOUT T_A = +25°C Over Temperature (C, E) Over Temperature (M)	 1.5 1.8 2.0	 1.3		V
Supply Current	I_S	LX off, Over Temperature VOUT= +5V, MAX631 VOUT = +12V, MAX632 VOUT = +15V, MAX633		 0.135 0.5 0.75	 0.4 2.0 2.5	mA
Reference Voltage (Internal)		T_A = +25°C Over Temperature	1.24 1.20	1.31	1.38 1.42	V
VOUT Voltage		No Load, VFB = GND Over Temperature MAX631A } 5% Output Accuracy MAX632A MAX633A MAX631B } 10% Output Accuracy MAX632B MAX633B	 4.75 11.4 14.25 4.5 10.8 13.5	 5.0 12.0 15.0 5.0 12.0 15.0	 5.25 12.6 15.75 5.5 13.2 16.5	V
Efficiency				80		%
Line Regulation (Note 1)		+0.5VOUT<+V_S<VOUT		0.08		%VOUT
Load Regulation (Note 1)		V_S = +0.5VOUT, P_{OUT} = 0mW to 150mW		0.2		%VOUT
Oscillator Frequency	f_O	VOUT = +5V MAX631A MAX631B VOUT = +12V MAX632A MAX632B VOUT = +15V MAX633A MAX633B	 40 35 45.5 40 45.5 40	 45 45 50 50 50 50	 50 60 56 65 56 65	kHz
Oscillator Frequency Tempco				-60		Hz/°C
Oscillator Duty Cycle		MAX631, VOUT = +5V MAX632, VOUT = +12V MAX633, VOUT = +15V	40 40 40	50 50 50	60 60 60	%
LX On Resistance	R_{ON}	I_X = 100mA, VOUT = +5V VOUT = +15V		6 3.5	12 7	Ω

ELECTRICAL CHARACTERISTICS (continued)

(T_A = +25°C, unless otherwise noted.)

PARAMETER	SYMBOL	CONDITIONS	MIN	TYP	MAX	UNITS
LX Leakage Current	I_{XL}	V4 = +16.5V T_A = +25°C Over Temperature (C, E) Over Temperature (M)		0.01	1.0 30 100	µA
Diode Forward Voltage	V_F	I_F = 100mA			1.0	V
CP On Resistance		VOUT = +5V, IOUT = ±10mA VOUT = +15V, IOUT = ±30mA		70 30	140	Ω
VFB Input Bias Current	I_{FB}			0.01	10	nA
Low Battery Input Threshold	V_{LBI}			1.31		V
Low Battery Input Bias Current	I_{LBI}			0.01	10	nA
Low Battery Output Current	I_{LBO}	V2 = +0.4V, V1 = +1.1V T_A = +25°C Over Temperature	 0.5	1.0		mA
Low Battery Output Leakage Current	I_{LBOL}	V2 = +16.5V, V1 = +1.4V		0.01	3.0	µA

Note 1: Guaranteed by correlation with DC pulse measurements.

Pin Description

PIN	NAME	FUNCTION
1	LBI	Low Battery Detector Input. When the voltage at LBI is lower than the Low Battery Detector threshold (1.31V), LBO sinks current.
2	LBO	The Low Battery Detector Output is an open drain N-channel MOSFET which sinks current when LBI is below 1.31V.
3	GND	Ground
4	LX	This pin drives the external inductor with an internal N-channel power MOSFET. LX has an output resistance of typically 6Ω and a peak current rating of 425mA.
5	VOUT	The regulated DC-DC converter output.
6	CP	The Charge Pump output is a low impedance buffer which swings from GND to VOUT at the oscillator frequency. 2 external capacitors and diodes can be connected to generate a negative output voltage (Figure 3).
7	VFB	When VFB is grounded, the DC-DC converter output will be the factory preset value. When an external voltage divider is connected from VOUT to VFB and GND, this pin becomes the feedback input for adjustable output operation.
8	COMP	The Compensation input is connected to the internal voltage divider which sets the fixed voltage output. In some circuit board layouts, a lead compensation capacitor (100pF to 10nF) connected between VOUT and COMP reduces low-frequency ripple and improves transient response.

Typical Applications

Basic Step-Up Circuits

Figure 1 shows the basic boost or step-up circuit for the MAX631/632/633. The circuit corresponds to Table 1 which shows values for typical input voltages and output currents.

Table 1. Inductor Selection for Common Designs

V_{IN} (V)	VOUT (V)	IOUT (mA)	EFF. (%)	INDUCTOR P.N. (Note 2)	µH	Ω
2	5	5	78	CB 6860-21	470	0.4
2	5	10	74	G 1B253	250	0.44
2	5	15	61	G 1B103	100	0.25
3	5	25	82	CB 6860-21	470	0.4
3	5	40	75	CB 7070-29	220	0.55
3	12	5	79	CB 6860-19	330	0.35
3	12	10	79	CB 7070-28	180	0.48
5	12	12	88	CB 6860-21	470	0.4
5	12	25	87	CB 6860-19	330	0.35
3	15	5	73	CB 7070-29	220	0.55
3	15	8	71	CB 7070-27	150	0.43
5	15	10	85	CB 6860-21	470	0.4
5	15	15	85	CB 6860-19	330	0.35
8	15	35	90	G 1B503	500	0.56

Note 2: CB = Cadell-Burns, NY, (516) 746-2310
G = Gowanda Electronics Corp., NY, (716) 532-2234
Other Manufacturers listed in Table 2.

CMOS Fixed/Adjustable Output Step-Up Switching Regulators

Typical Operating Characteristics

SUPPLY CURRENT vs. OUTPUT VOLTAGE

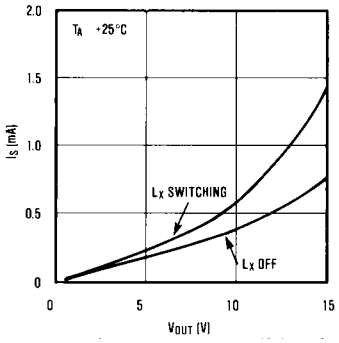

LX OUTPUT CURRENT vs. VOUT

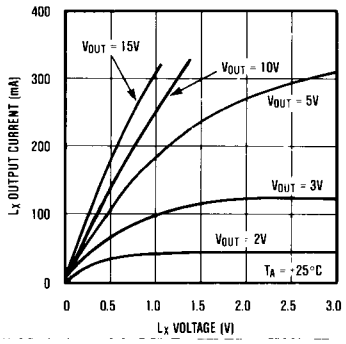

OSCILLATOR FREQUENCY vs. OUTPUT VOLTAGE

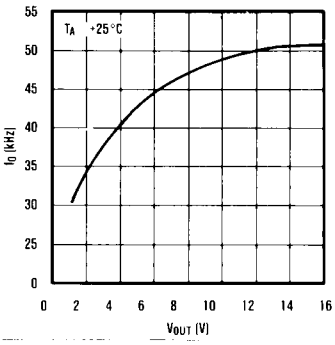

Detailed Description

The operation of the MAX631/632/633 can best be understood by examining the regulating loop of Figure 1. When the output voltage drops below the preset (or externally set) value, the Error Comparator switches high and connects the internal 45kHz Oscillator to the gate of the LX output driver, N1. N1 is an N-channel MOSFET with a typical on resistance of 6Ω and a current rating of 150mA. The following equation provides a good rule of thumb to see if the MAX631/632/633 can provide the desired output current without exceeding the current rating of N1:

$$\frac{8\,(VOUT - V_{IN})\,IOUT}{V_{IN}} \leq 450mA$$

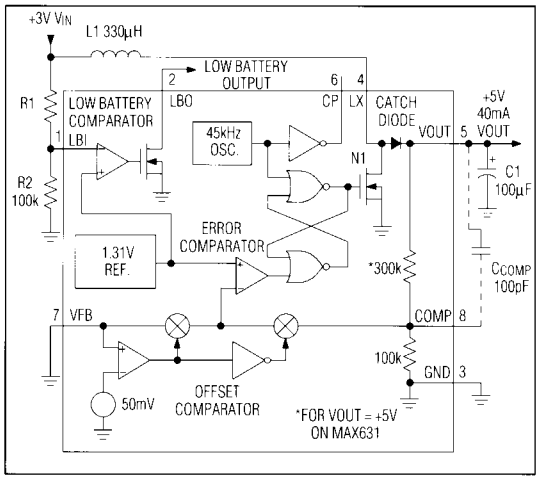

Figure 1. +3V to +5V Converter and Block Diagram

A low output voltage turns N1 on and off at the internal clock frequency. During each on half-cycle, the current through the inductor rises linearly, storing energy in the coil. During each off half-cycle, the coil's magnetic field collapses and voltage across the inductor reverses sign. The voltage at LX then rises until the internal diode is forward based, delivering power to the output. When the output voltage reaches the desired level, the Error Comparator inhibits N1 until the load discharges the output filter capacitor (C1) to less than the desired output level.

V_{IN}, Bootstrapped Operation

The MAX631/632/633 does not have a V_{IN} pin. Input power to start the DC-DC converter is supplied via the external inductor to the VOUT pin. Once the converter has started, it is then powered from its own output. This "bootstrap" design ensures that the output MOSFET, N1, will have maximum gate drive and, hence, a minimum R_{ON}. It also allows the converter to start at lower input voltages.

V_{IN}, Greater Than VOUT

If the regulator's input voltage is more than one forward diode drop greater than the desired output voltage, N1 will not turn on. Current will still be supplied to the load directly through the inductor and the internal diode, but without regulation. As long as the input is more than 0.6V above the desired output, the actual output voltage will be equal to the input voltage minus 0.6V.

Fixed or Adjustable Output

For operation at one of the preset output voltages (+5V for the MAX631, +12V for the MAX632, and +15V for the MAX633), VFB is connected to GND, and no external resistors are required. For an output voltage other than the preset value, an external voltage divider (R3 and R4, Figure 2) is required. VOUT is set as follows:

Let R4 be any resistance in the 10kΩ to 10MΩ range, typically 100kΩ, then:

$$R3 = R4\left(\frac{VOUT}{1.31V} - 1\right)$$

Table 1 shows nominal inductor parameters for a variety of input and output voltages. Values are given for both maximum output and maximum efficiency designs. When noise is not critical, a low-cost bobbin inductor will suffice. For higher power circuits or when low EMI and noise are required, pot cores and toroids should be used. (See Tables 1 and 2 for typical part numbers and manufacturers.)

Table 2. Coil and Core Manufacturers (Note 3)

MANUFACTURER	TYPICAL PART #	DESCRIPTION
BOBBIN INDUCTORS		
Dale	IHA-104	500µH, 0.5Ω
Caddell-Burns	7070-29	220µH, 0.55Ω
Gowanda	1B253	250µH, 0.44Ω
TRW	LL-500	500µH, 0.75Ω
POTTED TOROIDAL INDUCTORS		
Dale	TE-3Q4TA	1mH, 0.82Ω
TRW	MH-1	600µH, 1.9Ω
Gowanda	050AT1003	100µH, 0.05Ω
FERRITE CORES AND TOROIDS (Note 4)		
Siemens	B64290-K38-X38	Tor. Core, 4µH/T^2
Magnetics	555.130	Tor. Core, 53nH/T^2
Stackpole	57-3215	Pot Core, 14mm x 8mm
Magnetics	G-41408-25	Pot Core, 14 x 8, 250nH/T^2

Note 3: This list does not constitute an endorsement by Maxim Integrated Products and is not intended to be a comprehensive list of all manufacturers of these components.

Note 4: Permag Corp. is a distributor for many of the listed core and toroid manufacturers. (516) 822-3311.

Output Filter Capacitor

The MAX631/632/633's output ripple has 2 components which are 90° out of phase. One component results from the change in the stored charge on the filter capacitor with each LX pulse. The other is the product of the capacitor's charge-discharge current and its Equivalent Series Resistance (ESR). With low-cost aluminum electrolytic capacitors, the ESR produced ripple is often larger than that caused by the change in charge. Consequently, high-quality aluminum or tantalum filter capacitors will minimize output ripple, even if smaller capacitance values are used. Best results at a reasonable cost are typically achieved with a high-quality aluminum electrolytic, in the 100µF to 500µF range, in parallel with a 0.1µF ceramic capacitor.

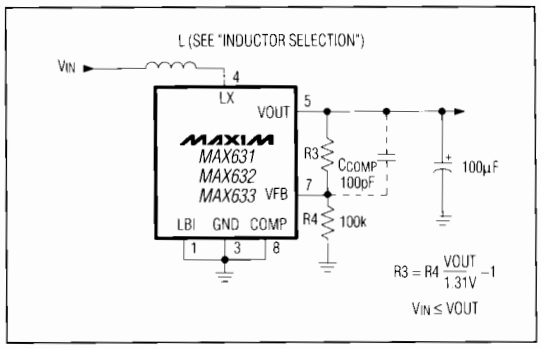

Figure 2. Connections for Adjustable Output

Catch Diode

The MAX631 series regulators contain an internal "catch" diode and, therefore, require no external diode for most applications. However, an external diode can be connected in parallel with the internal diode at the LX and VOUT pins. For example, a Schottky diode with a low forward voltage drop will provide some improvement in efficiency.

Bypassing and Compensation

Since the inductor charging current can be relatively large, high currents flow through the ground connection to the MAX631/632/633. To prevent unwanted feedback, the impedance of the ground path must be as low as possible, and power-supply bypassing should be used.

When the value of the voltage setting resistors (R3 and R4, Figure 2) exceed 50kΩ, stray capacitance at the VFB input can add a "lag" to the feedback response, destablizing the regulator, increasing low frequency ripple, and lowering efficiency. This problem can often be avoided by minimizing lead lengths and circuit board trace size at the VFB node. It can also be remedied by adding a "lead" compensation capacitor (100pF to 10nF) in parallel with R3.

The COMP input allows access to the internal voltage divider so that compensation can also be added when fixed output operation is used. A capacitor connected between VOUT and COMP again adds a "lead" to the regulator's response.

CMOS Fixed/Adjustable Output Step-Up Switching Regulators

Low Battery Detector

The Low Battery Detector compares the voltage on the Low Battery Input, LBI, with the internal 1.31V bandgap reference. The Low Battery Detector Output, LBO, goes low whenever the input voltage at LBI is less than 1.31V. The Low Battery detection voltage is set by resistors, R1 and R2 (Figure 1).

Let R2 be any resistance in the 10kΩ to 10MΩ range, typically 100kΩ, then:

$$R1 = R2\left(\frac{VLB}{1.31V} - 1\right)$$

(VLB is the desired Low Battery detection voltage)

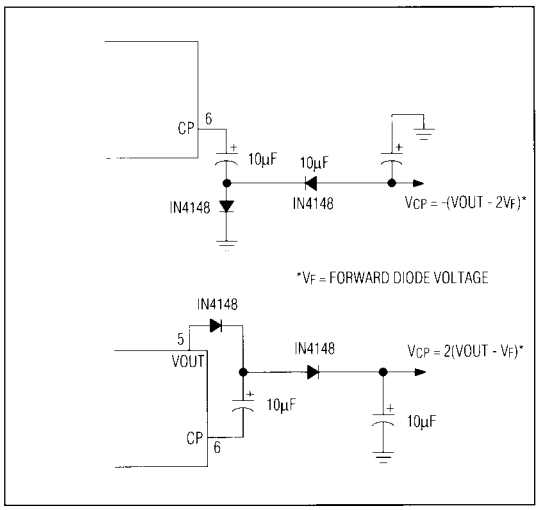

Figure 3. Using the Charge Pump (CP) output as a voltage inverter and/or doubler. Both circuits can be used together.

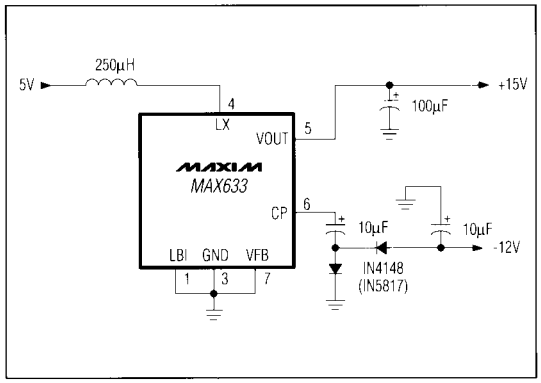

Figure 4. +5V to +15V/-12V Converter

Negative Output Voltage

The Charge Pump (CP) output is a low impedance buffer which swings from ground to VOUT at the oscillator frequency. Two external capacitors and diodes can be connected, as shown in Figure 3, to generate a negative output voltage of –(VOUT – 1.2V) or a positive output of 2(VOUT – 1.2V). 1.2V is the forward drop of 2 silicon diodes. Both circuits can be used at once if desired. With 10µF capacitors, the output impedance of V_{CP} is about 30Ω. If space is critical, the capacitors can be reduced, but with a slight increase in output impedance and V_{CP} output ripple.

The circuit shown in Figure 4 provides approximately ±10mA with VOUT = +15V, and ±15mA if VOUT = +12V. The magnitude of the negative output is about 3V less than VOUT due to the forward voltage drop of the 1N4148 diodes and the output impedance of CP. Using Schottky diodes (IN5817) will increase the absolute value of the negative output by about 1V. The performance of the CP output is shown in Figure 5.

What Value of Inductor?

A General Discussion

The converters in this data sheet operate by charging an inductor from a DC input and then discharging the inductor to generate a DC output that is greater than the input.

The proper inductor for any DC-DC converter depends on three things: the desired output power, the input voltage (or range of input voltage), and the converter's oscillator frequency and duty cycle. The oscillator timing is important because it determines how long the coil will be charged during each cycle. This, along with the input

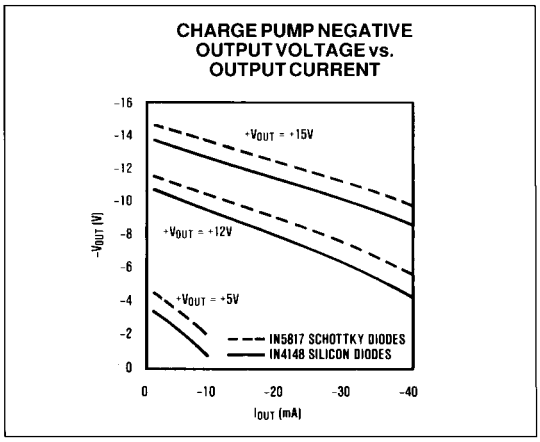

Figure 5. Charge Pump Negative Output Voltage vs. Current

voltage, determines how much energy will be stored in the coil.

The inductor must meet four electrical criteria:

[ ] **Value-** Low enough inductance so it stores adequate energy at the worst-case, low input voltage.

High enough so excessive and potentially destructive currents are avoided under worst-case conditions for high power-switch transistor on time and high input voltage.

[ ] **Saturation-** The coil must deliver the correct inductance value at the worst-case, high peak operating current.

[ ] **EMI-** Electromagnetic interference must not upset nearby circuitry or the regulator IC. Ferrite bobbin types work well for digital circuits; toroid or pot core types work well for EMI-sensitive analog circuits.

[ ] **DC resistance-** Winding resistance must be adequately low so efficiency is not affected and self-heating does not occur. Values less than 0.5Ω are usually more than adequate.

Other inductor parameters, such as core loss or self-resonant frequency, are not a factor at the relatively low MAX631/632/633 operating frequency.

Inductor Value- Low Enough?

The problem that bites designs most often, especially in the production or pre-production phase, happens when the inductor value is too high. These units fail to deliver enough load current and exhibit poor load regulation. The worst-case is:

[ ] Maximum load current
[ ] Minimum supply voltage
[ ] Maximum inductor value, including tolerance
[ ] Maximum on resistance of the switch because it reduces the excitation voltage across the inductor
[ ] Worst-case low on time

Inductor Value- High Enough?

The inductor value must also be high enough so peak currents do not stress the transistor or cause the inductor core to saturate. All kinds of odd symptoms can be traced to excessive inductor currents: low efficiency, rattling heat sinks, whining coils, and increased output ripple. Very low inductor values may result in damaged power transistors.

The slope of the inductor current, and therefore the peak value that it reaches in a given on time, is determined by the supply voltage and the inductor value. The worst case occurs at:

[ ] Maximum supply voltage
[ ] Minimum inductor value, including tolerance
[ ] Minimum on resistance of the switch
[ ] Low switching frequency (or maximum switch on-time)

Inductor Selection

The inductor equations below must be calculated for both worst-case sets of conditions. The final value chosen should be between the minimum value and maximum value calculated. Within these bounds, the value can be adjusted slightly lower for extra load capability or higher for lowest ripple.

$$[1] \quad I_{pk} = \frac{VOUT + V_{DIODE} - V_{IN}}{(0.25)\,(V_{IN} - V_{SW})}\,(IOUT)$$

$$[2] \quad L = \frac{V_{IN} - V_{SW}}{I_{pk}}\,(t_{ON})$$

Where V_{SW} is the voltage drop across the switch in the on state. Conservatively, the worst case is about 0.75V max, 0.25V min with V_{IN} = +15V and 1.5V max, 0.5V min with V_{IN} = +5V.

Example: A +5V 10% input must be converted to +15V at 15mA. A Schottky diode (1N5817) and a MAX633B are used.

Calculate maximum inductor value allowed:

$$I_{pk} = \frac{15V + 0.4V - 4.5V}{(0.25)\,(4.5V - 0.75V)}\,(15mA) = 174mA$$

$$L = \frac{4.5 - 0.75}{174mA}\,(8\mu s) = 172\mu H$$

Calculate the minimum inductor value allowed:

I_{pk} = 450mA (from table of max ratings)

$$L = \frac{5.5V - 0.25V}{450mA}\,(12\mu s) = 140\mu H$$

If this minimum value is greater than the maximum value calculated above, an external power MOSFET must be used. See the MAX641/642/643 data sheet.

A value of 160μH would be a good choice for this application. The "A" grade devices, with tighter oscillator tolerance, allow more output current in a given application.

Inductor Saturation

When using off-the-shelf inductors, make sure the peak current rating is observed. When designing your own inductors, observe the core manufacturer's Ampere-turns or NI ratings. Failure to observe the peak current or NI ratings may lead to saturation of the inductor. Inductor saturation leads to very high current levels causing excessive power dissipation, poor efficiency, and possible damage to the chip and the catch diode.

CMOS Fixed/Adjustable Output Step-Up Switching Regulators

Test for saturation by applying the maximum load and the maximum input voltage while monitoring the inductor current with a current probe. The normal inductor current waveform is a sawtooth with a linear current ramp. Saturation creates a nonlinear current waveform with a very rapid increase in current once the inductor saturates. It is this rapid current increase and the resultant high peak currents that can damage the inductor and the catch diode.

Chip Topography

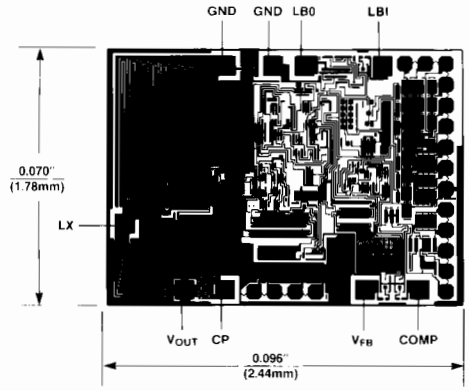

Ordering Information (continued)

PART*	TEMP. RANGE	PIN-PACKAGE
MAX633XCPA	0°C to +70°C	8 Plastic DIP
MAX633XCSA	0°C to +70°C	8 Narrow SO
MAX633XC/D	0°C to +70°C	Dice
MAX633XEPA	-40°C to +85°C	8 Plastic DIP
MAX633XESA	-40°C to +85°C	8 Narrow SO
MAX633XEJA	-40°C to +85°C	8 CERDIP
MAX633XMJA	-55°C to +125°C	8 CERDIP

** X = A for 5% Output Accuracy. X = B for 10% Accuracy.*

Maxim cannot assume responsibility for use of any circuitry other than circuitry entirely embodied in a Maxim product. No circuit patent licenses are implied. Maxim reserves the right to change the circuitry and specifications without notice at any time.

©1990 Maxim Integrated Products Printed USA 3/90

MAXIM is a registered trademark of Maxim Integrated Products.
Dual Mode is a trademark of Maxim Integrated Products.