FA3635P

CMOS IC
For Switching Power Supply Control

■ Description

FA3635P is a CMOS IC which includes low on-resistance power MOSFET for PWM-type switching power supply control. This IC achieves high efficiency DC-DC converter and it is suitable for buck converter or inverting converter with high input voltage of 10V to 50V.

■ Features

- Built-in low on-resistance Pch power MOSFET 50V/1.1Ω(typ.)/1A(peak)
- Wide range of 10V to 50V for input voltage
- 1.2mA low operating current as a Power IC
- Latch-mode short-circuit protection function
- Built-in over-temperature protection Tj =125°C (min.)

■ Applications

- Power supply for general equipment

■ Dimensions, mm

● DIP-8

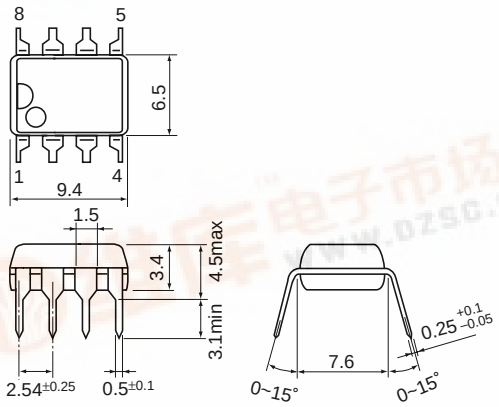

■ Block diagram

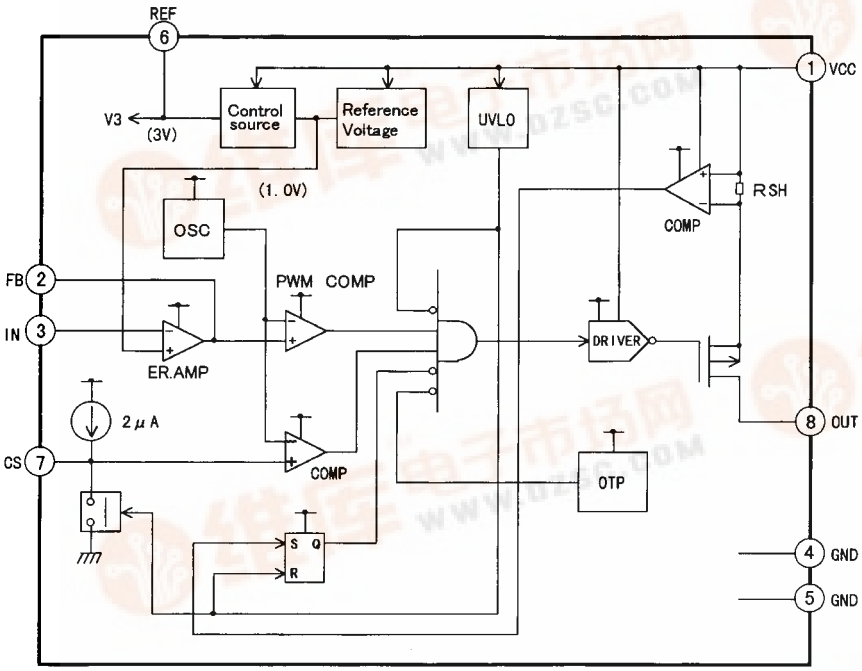

Pin No.	Pin symbol	Description
1	VCC	Power supply
2	FB	Error amplifier output
3	IN	Inverting input to error amplifier
4	GND	Ground
5	GND	Ground
6	REF	Reference voltage
7	CS	Capacitor for soft-start
8	OUT	Output

■ Absolute maximum ratings

Item	Symbol	Rating	Unit
Supply voltage	V_{CC}	50.0	V
Error amplifier input voltage	V_{IN}	5.5	V
Total Power dissipation (Ta = 25°C)	P_d	1.1	W
Junction temperature	T_j	125	°C
Operating temperature	T_{op}	–20 to +85°C	°C
Storage temperature	T_{stg}	–40 to +150	°C

■ Recommended operating conditions

Item	Symbol	Min.	Max.	Unit
Supply voltage	V_{CC}	10.0	45.0	V
REF terminal by-pass capacitor	C_{REF}	0.047	0.22	µF
VCC terminal by-pass capacitor	C_O	470		µF

■ Electrical characteristics (Ta=25°C, V_{CC}=44V, C_{REF}=0.1µF)

Reference voltage section

Item	Symbol	Test condition	Min.	Typ.	Max.	Unit
terminal Voltage	V_{REG}	C_{REF}=0.1µF	3.00	3.12	3.24	V

Oscillator section

Item	Symbol	Test condition	Min.	Typ.	Max.	Unit
Oscillation frequency	f_{OSC}		70	81	100	kHz
Frequency change with supply voltage	f_{dV}	V_{CC}=10 to 45V		±1	±3	%
Frequency change with temperature	f_{dT}	Ta=–20 to +85°C		±3	±5	%

Error amplifier section

Item	Symbol	Test condition	Min.	Typ.	Max.	Unit
Input common mode voltage range	V_{ICOM}		0.2		2.5	V
Open-loop gain	A_{VOL}			55		dB
Unity-gain bandwidth	f_T			1.0		MHz
Output sink current	I_{FBL}	Voltage follower V_{FB}=V_{ref}+0.05V	3.0	3.8		mA
Output source current	I_{FBH}	Voltage follower V_{FB}=V_{ref}–0.05V		–140	–100	µA
Reference Voltage	V_{ref}	Voltage follower V_{CC}=10 to 45V Ta=–20 to +85°C	0.97	1.00	1.03	V
Input threshold voltage (Pin 2)	$V_{FB\ 0}$	Duty cycle=0%	0.5	0.6	0.7	V
	$V_{FB\ 100}$	Duty cycle=100%	2.3	2.5	2.7	V

Soft-start circuit section

Item	Symbol	Test condition	Min.	Typ.	Max.	Unit
Input threshold voltage (Pin 7)	$V_{CS\ 0}$	Duty cycle=0%	0.5	0.6	0.7	V
	$V_{CS\ 100}$	Duty cycle=100%	2.3	2.5	2.7	V
Charge current	I_{CS}		–2.8	–2.2	–1.6	µA

Undervoltage lockout circuit section

Item	Symbol	Test condition	Min.	Typ.	Max.	Unit
Operating voltage	V_{UVLO}		5.0	6.1	8.5	V

Overheat protection section

Item	Symbol	Test condition	Min.	Typ.	Max.	Unit
Operating temperature	T_{OH}		125	135	145	°C
Hysteresis width	ΔT_{OH}		45	50	55	°C

Output section

Item	Symbol	Test condition	Min.	Typ.	Max.	Unit
Voltage drop	V_{DROP}	I_{OUT}=1.0A		1.1	1.4	V
		I_{OUT}=0.7A		0.7	0.9	
		I_{OUT}=0.1A		0.1	0.2	
Overcurrent limit	I_{OLMT}	Peak current	1.0	1.75	2.0	A

Overall device

Item	Symbol	Test condition	Min.	Typ.	Max.	Unit
Operating current	I_{CC}	Out pin open, V_{CC}=44V Duty cycle=100%		0.9	4.0	mA

■ Characteristic curve

● Thermal characteristic

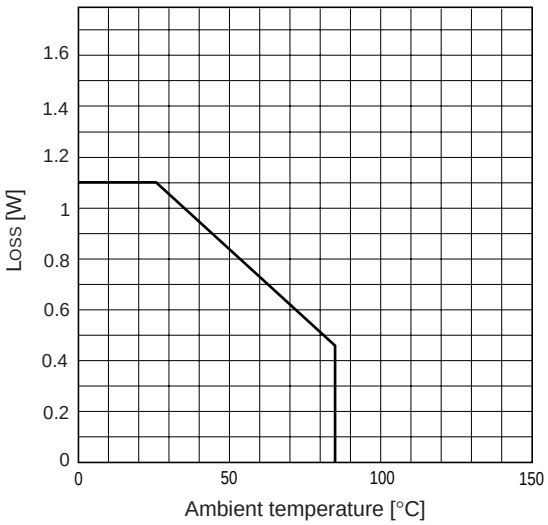

Thermal resistance : θj-c(Junction to case) = 30°C/W
θj-a(Junction to air) = 90°C/W

■ Characteristic curves (Ta=25°C)

Output duty cycle vs. FB terminal voltage (V_{FB})

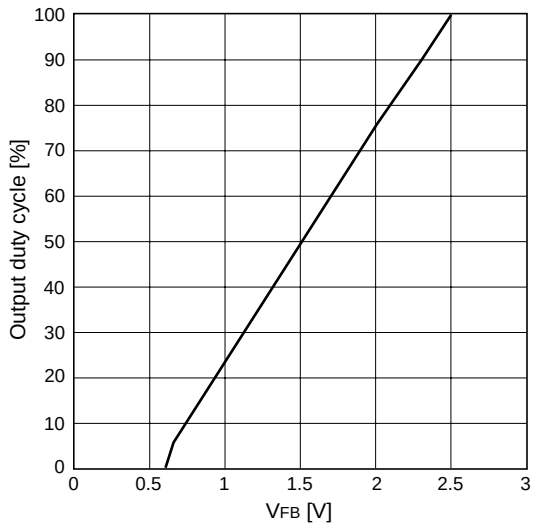

Output duty cycle vs. CS terminal voltage (V_{CS})

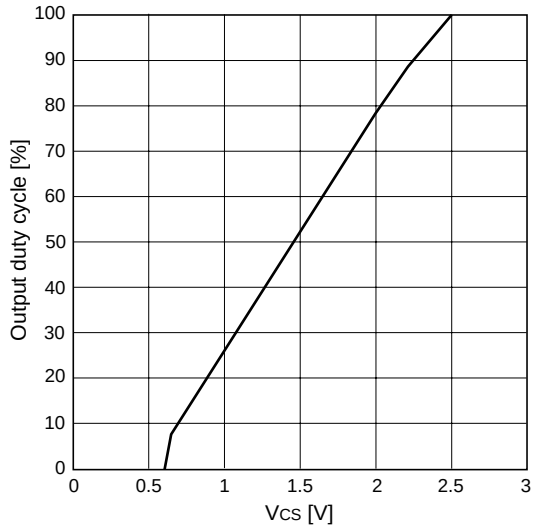

Oscillation frequency (f_{OSC}) vs. ambient temperature (T_a)

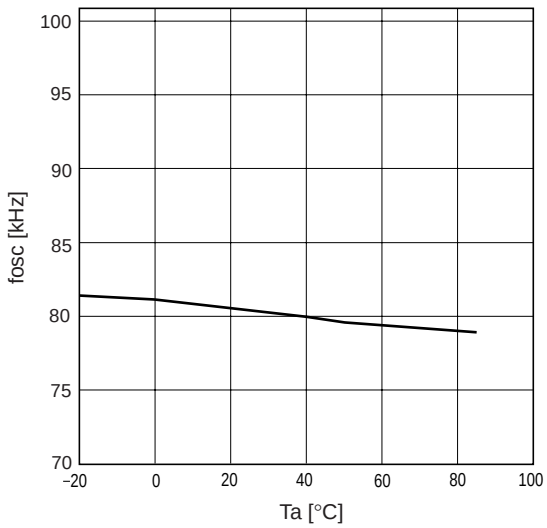

Reference voltage (V_{REF}) vs. ambient temperature (T_a)

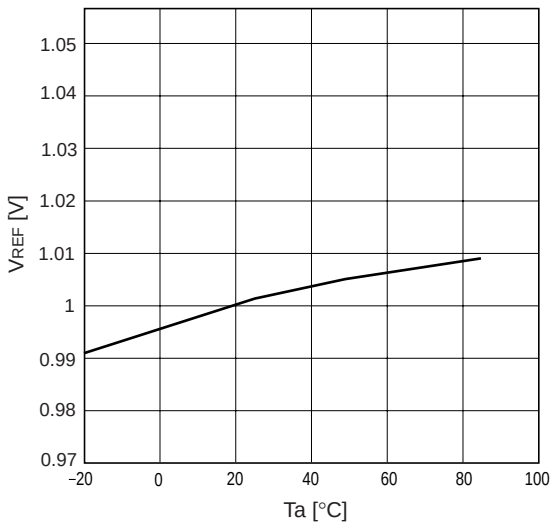

Output voltage (V_{OUT}) vs. output current (I_{OUT})

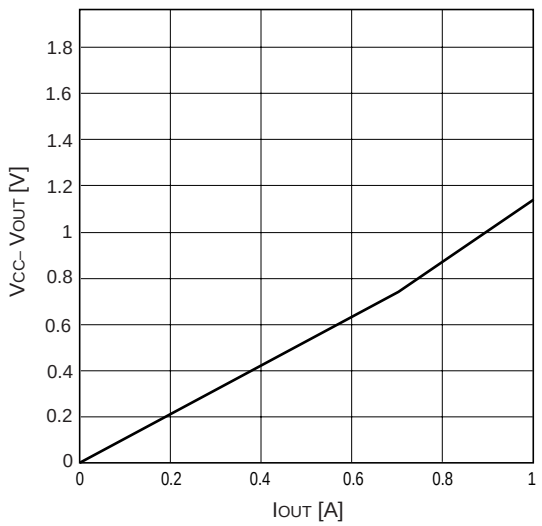

Supply current (I_{CC}) vs. supply voltage (V_{CC})

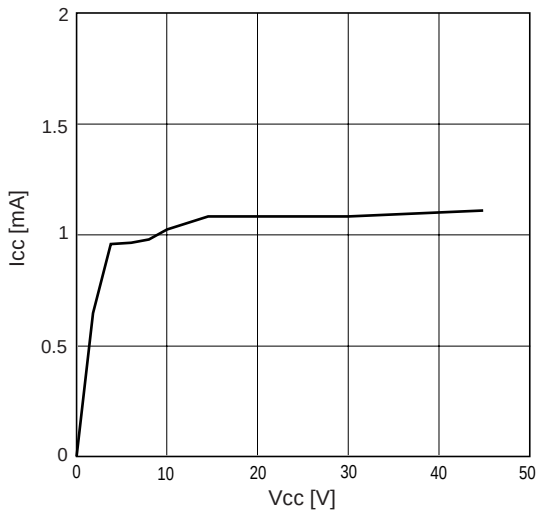

Error amplifier voltage gain (Av)/ phase (θ) vs. frequency (f)

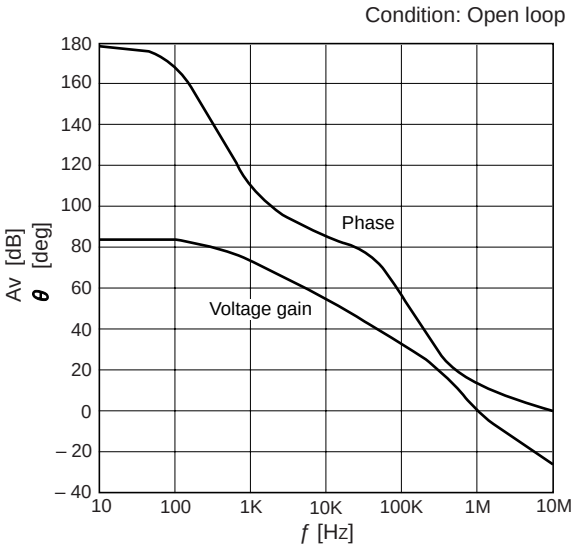

■ Application circuit

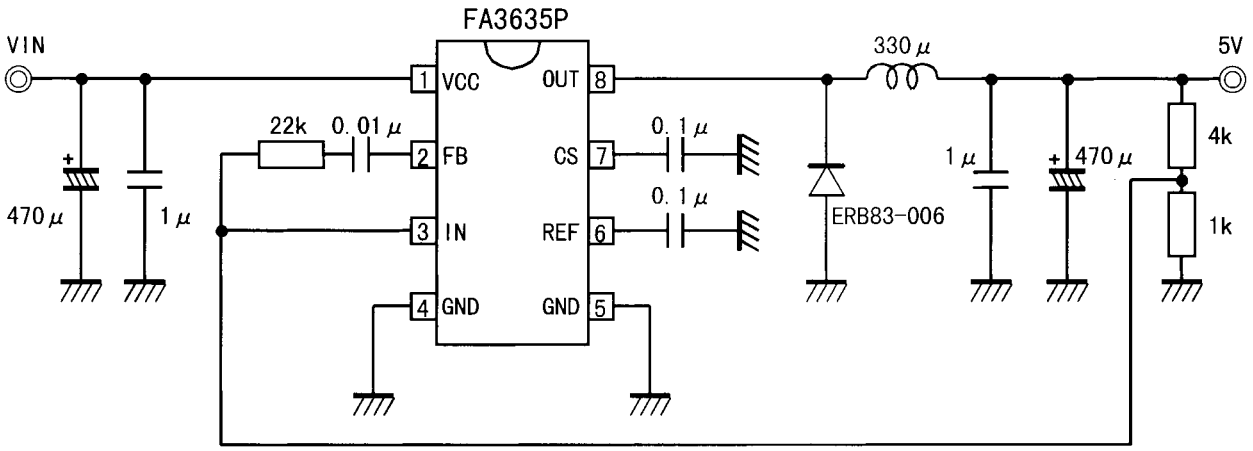

Parts tolerances characteristics are not defined in the circuit design sample shown above. When designing an actual circuit for a product, you must determine parts tolerances and characteristics for safe and economical operation.