查询FA7611供应商

捷多邦，专业PCB打样工厂，24小时加急出货

FA7611CP(E)

Bipolar IC
For Switching Power Supply Control

■ Description

The FA7611CP(E) is a bipolar IC containing basic circuit necessary for PWM-type switching power supply control.

■ Features

- Low-voltage operation (Vcc = 3.6 to 22V)
- Predrivers: Totem-pole output or open-collector for CH1 and open-collector output for CH2
- Latch-mode short-circuit protection function (no malfunction due to electrical noise)
- soft-start function
- Undervoltage lock-out function
- One capacitor shared for short circuit protection and for soft start to minimize the number of external discrete components

■ Applications

- Battery power supply for portable equipment

■ Dimensions, mm

● SSOP-16

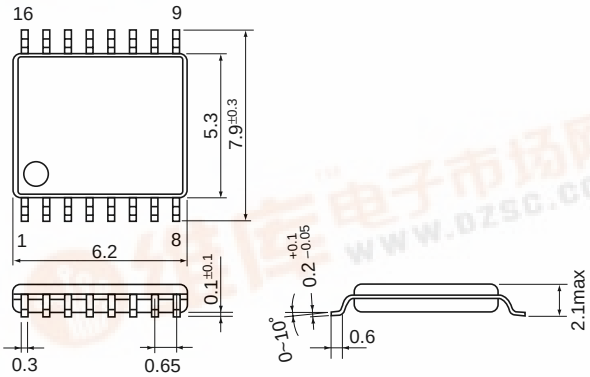

● DIP-16

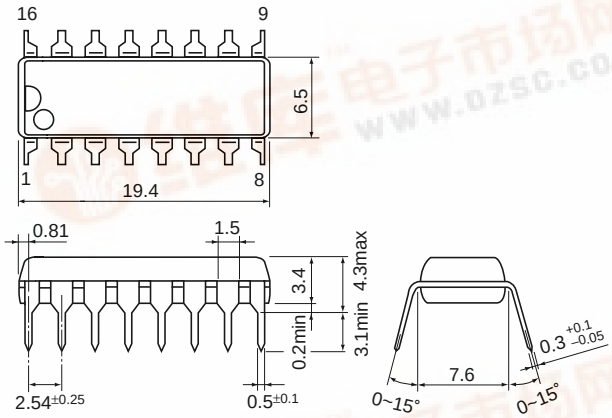

■ Block diagram

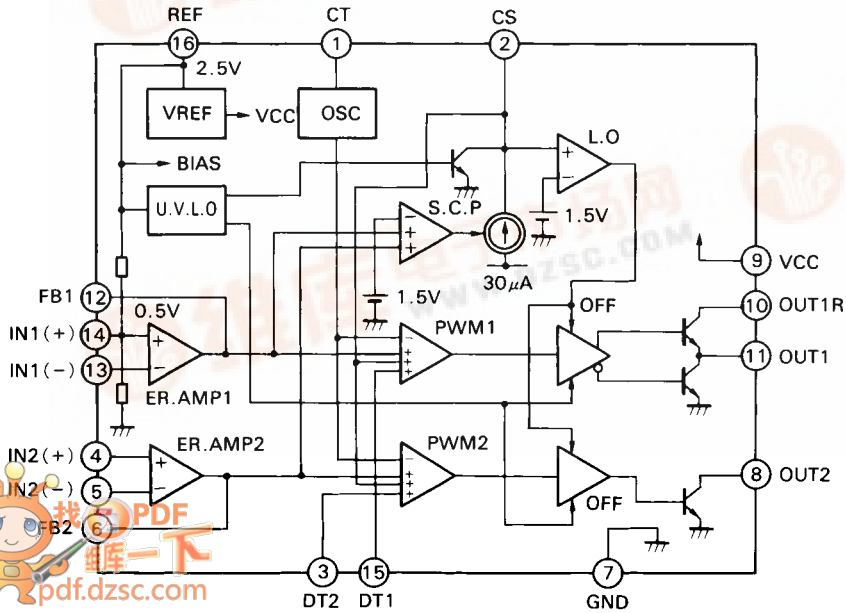

Pin No.	Pin symbol	Description
1	CT	Oscillator timing capacitor
2	CS	Capacitor for soft-start, short-circuit protection and delay
3	DT2	Dead time adjustment
4	IN2 (+)	Non-inverting input to error amplifier
5	IN2 (–)	Inverting input to error amplifier
6	FB2	Error amplifier output
7	GND	Ground
8	OUT2	CH. 2 Output
9	VCC	Power supply
10	OUT1R	CH. 1 Current limiting resistor
11	OUT1	CH. 1 Output
12	FB1	Error amplifier output
13	IN1 (–)	Inverting input to error amplifier
14	IN1 (+)	Non-inverting input to error amplifier Reference voltage (0.5V)
15	DT1	Dead time adjustment
16	REF	Reference voltage output (2.5V)

找PDF 维库一下 pdf.dzsc.com

■ Absolute maximum ratings

Item	Symbol	Rating	Unit
Supply voltage	V_{CC}	22	V
Reference voltage output current	I_{OR}	5	mA
Output current	I_O	±50	mA
Total power dissipation	P_d	400	mW
Operating temperature	T_{opr}	–20 to +85	°C
Storage temperature	T_{stg}	–40 to +150	°C

■ Recommended operating conditions

Item	Symbol	Min.	Max.	Unit
Supply voltage	V_{CC}	3.6	20	V
Feedback resistance	R_{NF}	100		kΩ
Oscillator timing capacitor	C_T	220	22,000	pF
Oscillator timing resistance	R_T	10	100	kΩ
Oscillation frequency	f_{OSC}	5	200	kHz

■ Electrical characteristics (Ta = 25°C, V_{CC} = 6V, R_T = 33kΩ, C_T = 1000pF)

Reference voltage section

Item	Symbol	Test condition	Min.	Typ.	Max.	Unit
Output voltage	V_{REF}	I_{OR} = 1mA	2.425	2.475	2.525	V
Line regulation	L_{INE}	V_{CC} = 3.6 to 20V, I_{OR} =1mA		4	12	mV
Load regulation	L_{OAD}	I_{OR} = 0.1 to 1mA		1	6	mV
Output voltage variation due to temperature change	V_{TC1}	Ta = –20 to +25°C	–1		1	%
	V_{TC2}	Ta = +25 to +85°C	–1		1	%

Oscillator section

Item	Symbol	Test condition	Min.	Typ.	Max.	Unit
Oscillation frequency	f_{OSC}	C_T = 1000pF, R_T = 33kΩ	95	115	135	kHz
Frequency variation 1 (due to supply voltage change)	f_{dV}	V_{CC} = 3.6 to 20V		1		%
Frequency variation 2 (due to temperature change)	f_{dT}	Ta = –20 to +85°C		5		%

Error amplifier section

Item	Symbol	Test condition	Min.	Typ.	Max.	Unit
Reference voltage	V_B		0.484	0.494	0.504	V
Input bias current	I_B			5	100	nA
Open-loop voltage gain	A_V		70			dB
Unity-gain bandwidth	G_B			0.6		MHz
Maximum output voltage (Pin 6 and Pin 12)	V_{OM+}	R_{NF} = 100kΩ	V_{REF}–0.2			V
	V_{OM-}	R_{NF} = 100kΩ			200	mV
Output source current (Pin 6 and Pin 12)	I_{OM+}	V_{OM} = 1V	40	85	200	μA

PWM comparator section

Item	Symbol	Test condition	Min.	Typ.	Max.	Unit
Input threshold voltage (Pin 6 and Pin 12)	V_{TH0}	Duty cycle = 0%		0.85	0.95	V
Input threshold voltage (Pin 6 and Pin 12)	V_{TH50}	Duty cycle = 50%		1.1		V

Dead time adjustment circuit section

Item	Symbol	Test condition	Min.	Typ.	Max.	Unit
Input bias current (Pin 3 and Pin 15)	I_{BDT}			80	300	nA
Input threshold voltage (Pin 3 and Pin 15)	$V_{TH\ DT0}$	Duty cycle = 0%		0.22	0.32	V
Input threshold voltage (Pin 3 and Pin 15)	$V_{TH\ DT50}$	Duty cycle = 50%		0.46		V

Short-circuit protection circuit section

Item	Symbol	Test condition	Min.	Typ.	Max.	Unit
Input threshold voltage (Pin 6 and Pin 12)	$V_{TH\ PC}$		1.20	1.50	1.80	V
Charge current (Pin 2)	I_{CHG}	Pin 2 = 0V, Pin 6, Pin 12 = 2V	10	30	50	μA
Latch-mode threshold voltage (Pin 2)	$V_{TH\ LA}$		1.20	1.50	1.80	V

Undervoltage lockout circuit section

Item	Symbol	Test condition	Min.	Typ.	Max.	Unit
OFF-to-ON threshold voltage	$V_{TH\ ON}$			2.65		V
ON-to-OFF threshold voltage	$V_{TH\ OFF}$			2.60		V
Voltage hysteresis	V_{HYS}			50		mV

Output section

Item	Symbol	Test condition	Min.	Typ.	Max.	Unit
CH. 1 H-level output voltage (Pin 11)	V_{01H}	R_L = 10kΩ	3.5	4.0		V
CH. 1 L-level output voltage (Pin 11)	V_{01L}	Output sink current = 20mA		0.25	0.65	V
CH. 1 Output source current (Pin11)	$I_{SOURCE1}$	R_{OUT1} = 470Ω (Pin 11) = 0V	8	11		mA
CH. 2 L-level output voltage (Pin 8)	V_{02L}	Output sink current = 20mA		1.0	1.5	V

Overall device

Item	Symbol	Test condition	Min.	Typ.	Max.	Unit
Supply current	$I_{CC\ LA}$	Latch mode		2.0	3.0	mA
Operating-state supply current	$I_{CC\ AV}$	$R_L = \infty$ Duty cycle = 50%		3.5	6.0	mA

■ Characteristic curves (Ta = 25°C)

Oscillation frequency (fosc) vs. timing capacitor capacitance (CT)

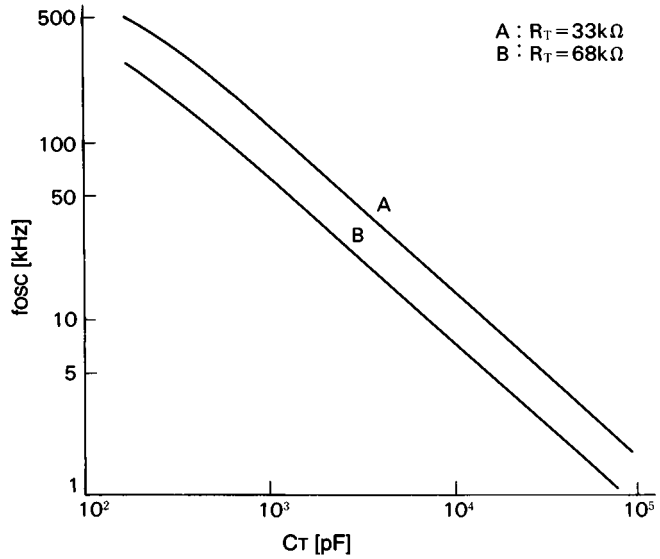

Output duty cycle vs. CS terminal voltage (VCS)

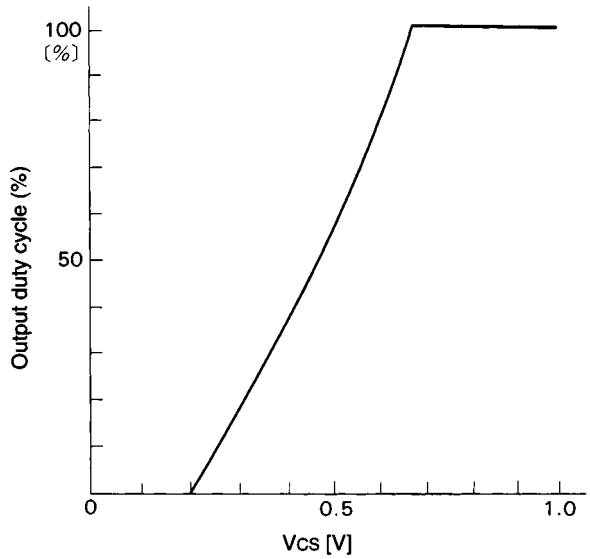

Output duty cycle vs. DT terminal voltage (VDT)

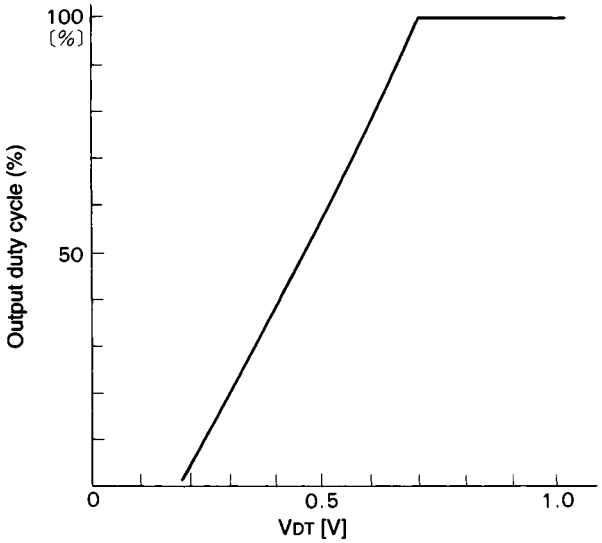

Output duty cycle vs. FB terminal voltage (VFB)

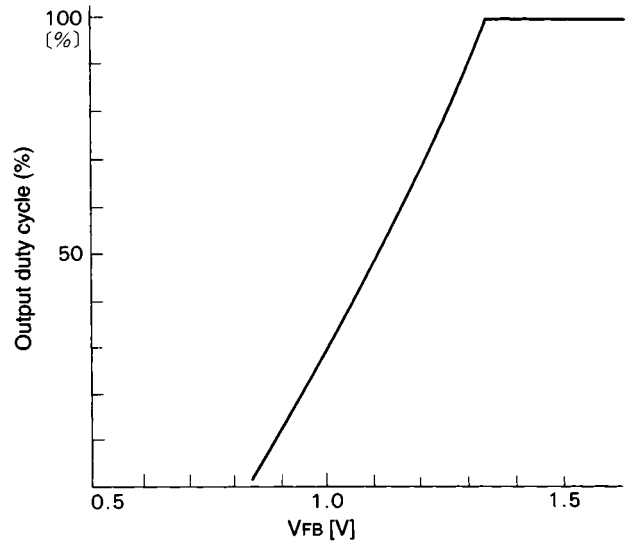

CH-1 output source current (ISOURCE1) vs. supply voltage (VCC)

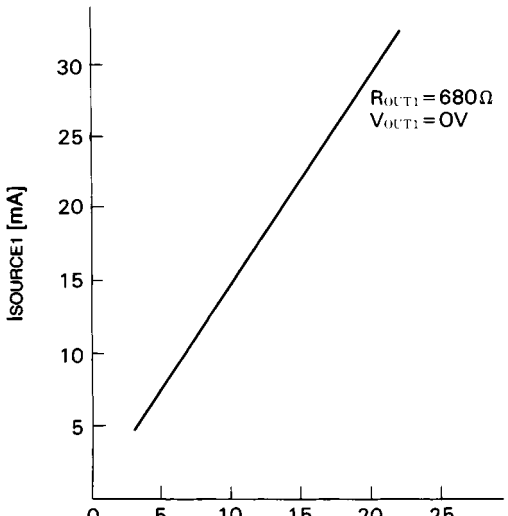

L-level output voltage (VO1L) vs. CH. 1 output sink current (ISINK1)

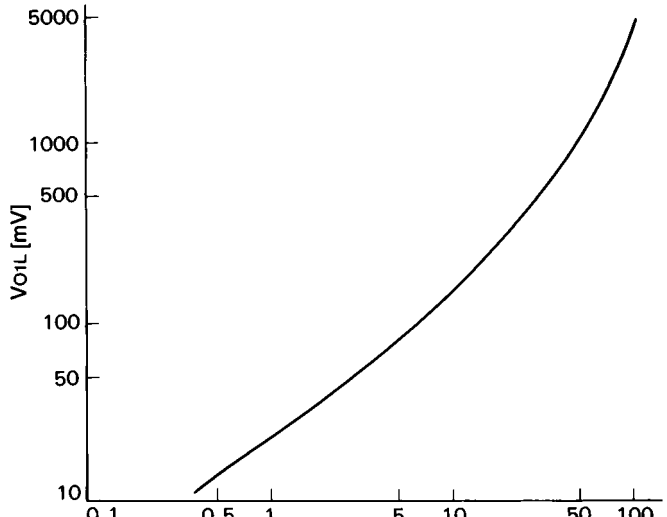

L-level output voltage (V_{O2L}) vs. CH. 2 output sink current (I_{SINK2})

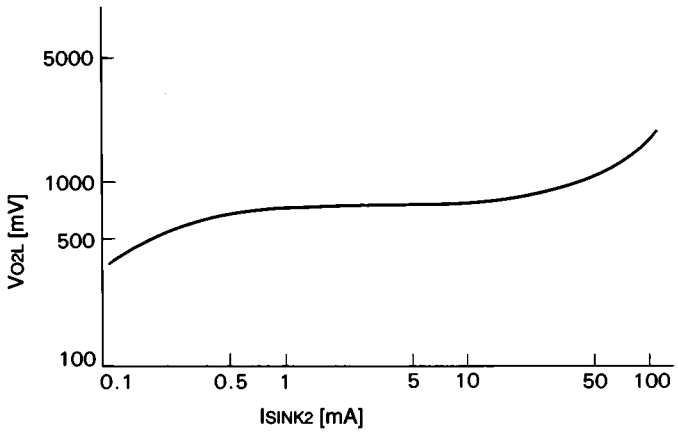

Supply current (I_{CC}) vs. supply voltage(V_{CC})

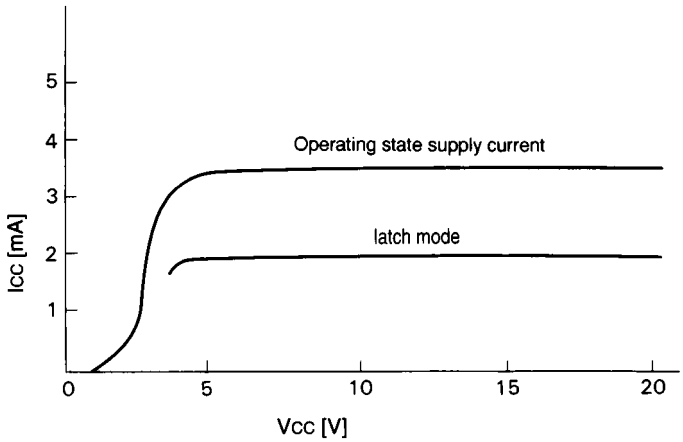

Operating-state supply current (I_{CCAV}) vs. oscillation frequency (f_{OSC})

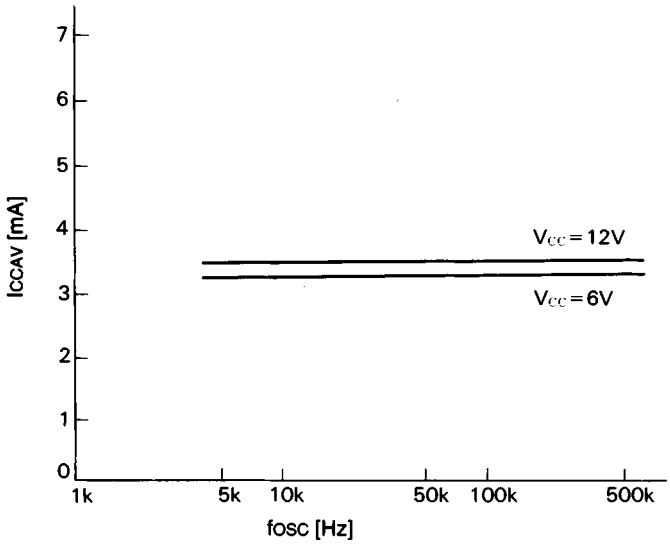

Error amplifie frequency (f) vs. valtage gain (A_V) / phase (θ)

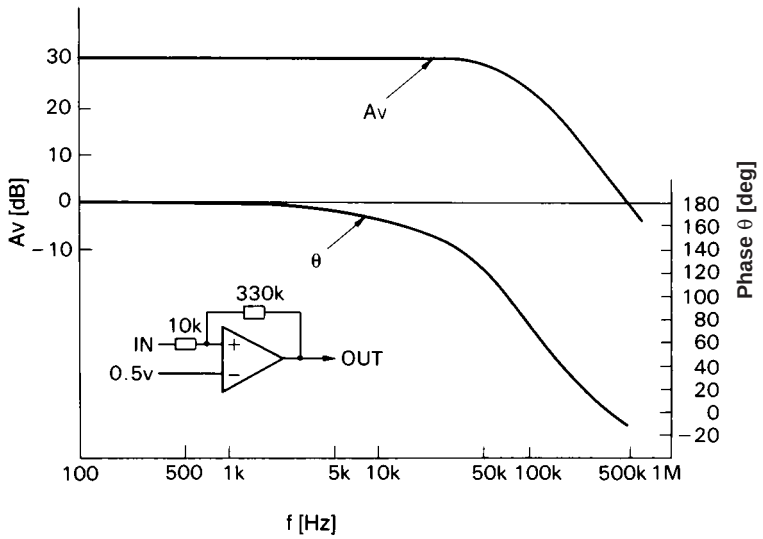

■ Application circuit

● Flyback-transformer type and chopper type buck converter circuit

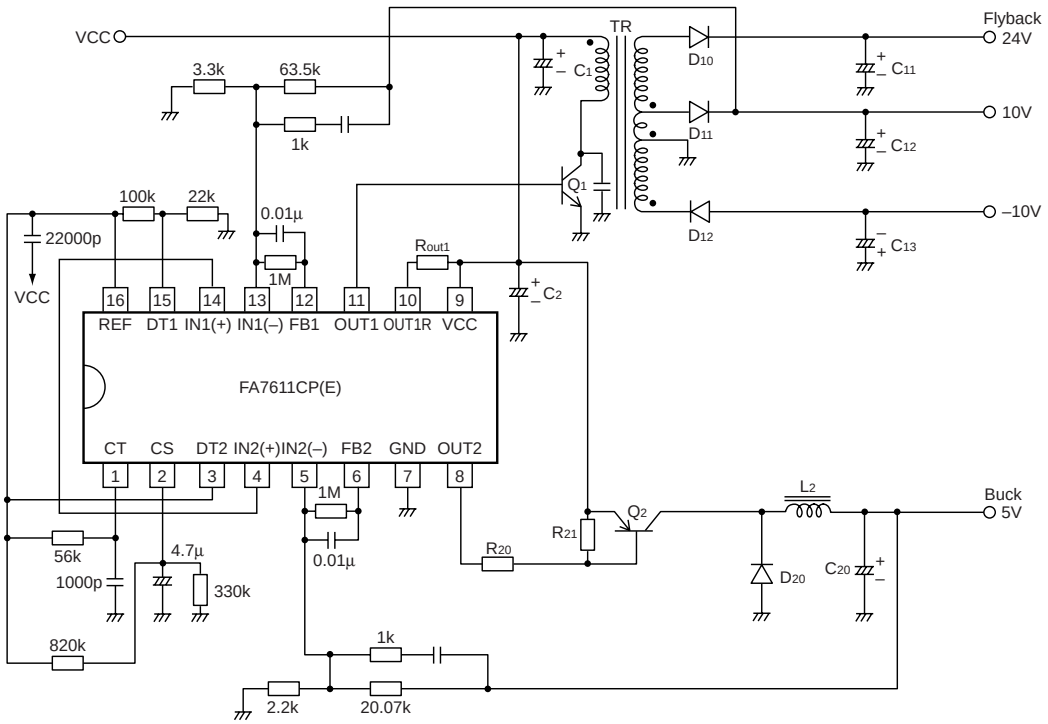

● Chopper type buck converter and inverting converter circuit

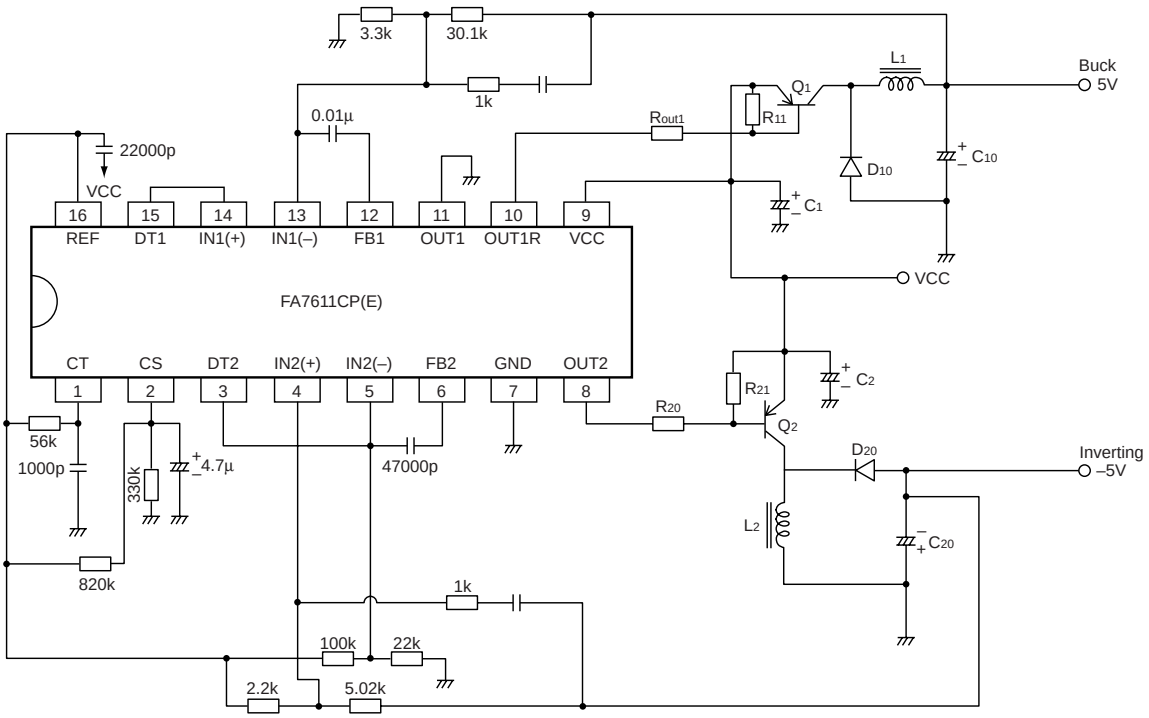

Parts tolerances characteristics are not defined in the circuit design sample shown above.
When designing an actual circuit for a product, you must determine parts tolerances and characteristics for safe and economical operation.

Please connect a capacitor, which the value is about 0.01µF to 0.1µF, between VCC and REF terminals in order to prevent from irregular output pulse at start-up.