查询FDB045AN08供应商 捷多邦，专业PCB打样工厂，24小时加急出货

FAIRCHILD SEMICONDUCTOR®

April 2002

FDB045AN08A0

N-Channel UltraFET® Trench MOSFET 75V, 80A, 4.5mΩ

Features

- $r_{DS(ON)}$ = 3.9mΩ (Typ.), V_{GS} = 10V, I_D = 80A
- Q_g(tot) = 92nC (Typ.), V_{GS} = 10V
- Low Miller Charge
- Low Qrr Body Diode
- UIS Capability (Single Pulse and Repetitive Pulse)
- Qualified to AEC Q101

Formerly developmental type 82684

Applications

- 42V Automotive Load Control
- Starter / Alternator Systems
- Electronic Power Steering Systems
- Electronic Valve Train Systems
- DC-DC converters and Off-line UPS
- Distributed Power Architectures and VRMs
- Primary Switch for 24V and 48V systems

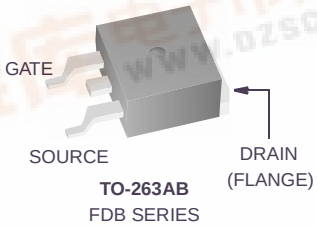

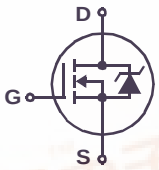

MOSFET Maximum Ratings T_C = 25°C unless otherwise noted

Symbol	Parameter	Ratings	Units
V_{DSS}	Drain to Source Voltage	75	V
V_{GS}	Gate to Source Voltage	±20	V
I_D	Drain Current Continuous (T_C < 145°C, V_{GS} = 10V)	80	A
	Continuous (T_{amb} = 25°C, V_{GS} = 10V, with $R_{\theta JA}$ = 43°C/W)	19	A
	Pulsed	Figure 4	A
E_{AS}	Single Pulse Avalanche Energy (Note 1)	600	mJ
P_D	Power dissipation	310	W
	Derate above 25°C	2.0	W/°C
T_J, T_{STG}	Operating and Storage Temperature	-55 to 175	°C

Thermal Characteristics

$R_{\theta JC}$	Thermal Resistance Junction to Case TO-263	0.48	°C/W
$R_{\theta JA}$	Thermal Resistance Junction to Ambient TO-263 (Note 2)	62	°C/W
$R_{\theta JA}$	Thermal Resistance Junction to Ambient TO-263, 1in^2 copper pad area	43	°C/W

This product has been designed to meet the extreme test conditions and environment demanded by the automotive industry. For a copy of the requirements, see AEC Q101 at: http://www.aecouncil.com/
Reliability data can be found at: http://www.fairchildsemi.com/products/discrete/reliability/index.html.
All Fairchild Semiconductor products are manufactured, assembled and tested under ISO9000 and QS9000 quality systems certification.

找PDF 维库一下 pdf.dzsc.com

Package Marking and Ordering Information

Device Marking	Device	Package	Reel Size	Tape Width	Quantity
FDB045AN08A0	FDB045AN08A0	TO-263AB	330mm	24mm	800 units

Electrical Characteristics T_C = 25°C unless otherwise noted

Symbol	Parameter	Test Conditions		Min	Typ	Max	Units
Off Characteristics							
B_{VDSS}	Drain to Source Breakdown Voltage	I_D = 250µA, V_{GS} = 0V		75	-	-	V
I_{DSS}	Zero Gate Voltage Drain Current	V_{DS} = 60V, V_{GS} = 0V		-	-	1	µA
			T_C = 150°C	-	-	250	
I_{GSS}	Gate to Source Leakage Current	V_{GS} = ±20V		-	-	±100	nA
On Characteristics							
$V_{GS(TH)}$	Gate to Source Threshold Voltage	V_{GS} = V_{DS}, I_D = 250µA		2	-	4	V
$r_{DS(ON)}$	Drain to Source On Resistance	I_D = 80A, V_{GS} = 10V		-	0.0039	0.0045	Ω
		I_D = 37A, V_{GS} = 6V		-	0.0056	0.0084	
		I_D = 80A, V_{GS} = 10V, T_J = 175°C		-	0.008	0.011	
Dynamic Characteristics							
C_{ISS}	Input Capacitance	V_{DS} = 25V, V_{GS} = 0V, f = 1MHz		-	6600	-	pF
C_{OSS}	Output Capacitance			-	1000	-	pF
C_{RSS}	Reverse Transfer Capacitance			-	240	-	pF
$Q_{g(TOT)}$	Total Gate Charge at 10V	V_{GS} = 0V to 10V	V_{DD} = 40V, I_D = 80A, I_g = 1.0mA		92	138	nC
$Q_{g(TH)}$	Threshold Gate Charge	V_{GS} = 0V to 2V		-	11	17	nC
Q_{gs}	Gate to Source Gate Charge			-	27	-	nC
Q_{gs2}	Gate Charge Threshold to Plateau			-	16	-	nC
Q_{gd}	Gate to Drain “Miller” Charge			-	21	-	nC
Switching Characteristics (V_{GS} = 10V)							
t_{ON}	Turn-On Time	V_{DD} = 40V, I_D = 80A, V_{GS} = 10V, R_{GS} = 3.3Ω		-	-	160	ns
$t_{d(ON)}$	Turn-On Delay Time			-	18	-	ns
t_r	Rise Time			-	88	-	ns
$t_{d(OFF)}$	Turn-Off Delay Time			-	40	-	ns
t_f	Fall Time			-	45	-	ns
t_{OFF}	Turn-Off Time			-	-	128	ns
Drain-Source Diode Characteristics							
V_{SD}	Source to Drain Diode Voltage	I_{SD} = 80A		-	-	1.25	V
		I_{SD} = 40A		-	-	1.0	V
t_{rr}	Reverse Recovery Time	I_{SD} = 75A, dI_{SD}/dt = 100A/µs		-	-	53	ns
Q_{RR}	Reverse Recovered Charge	I_{SD} = 75A, dI_{SD}/dt = 100A/µs		-	-	54	nC

Notes:
1: Starting T_J = 25°C, L = 0.48mH, I_{AS} = 50A.
2: Pulse Width = 100s

©2002 Fairchild Semiconductor Corporation

Typical Characteristics T_C = 25°C unless otherwise noted

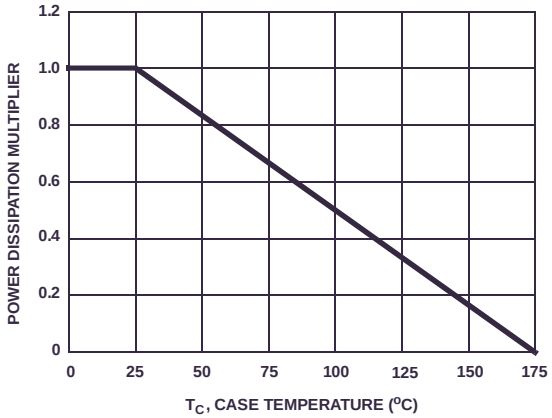

Figure 1. Normalized Power Dissipation vs Ambient Temperature

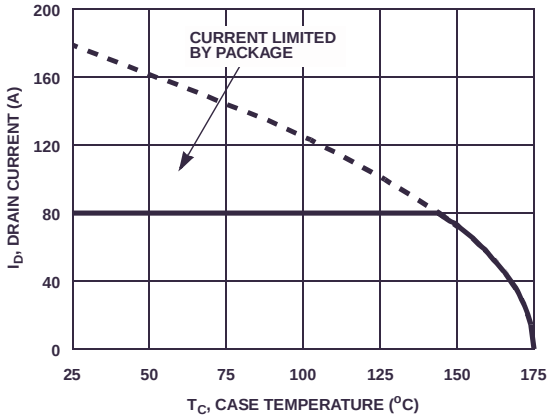

Figure 2. Maximum Continuous Drain Current vs Case Temperature

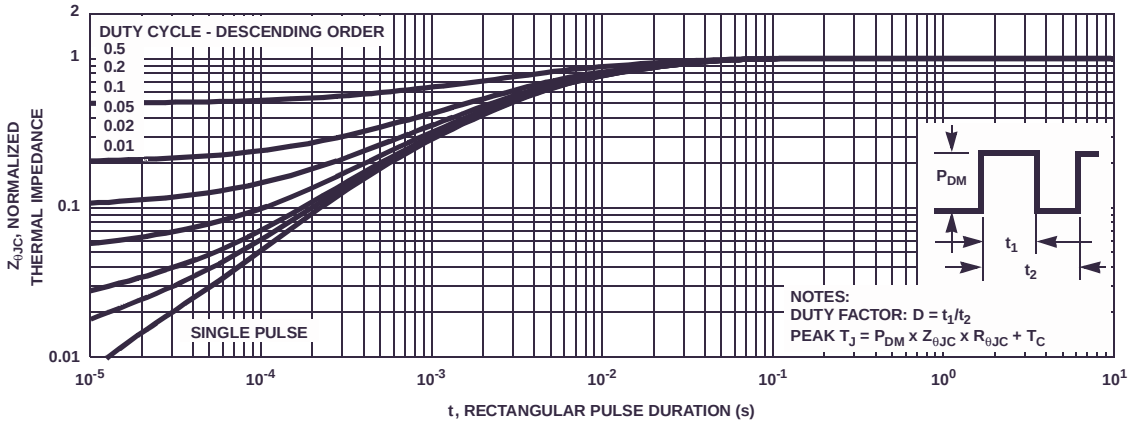

Figure 3. Normalized Maximum Transient Thermal Impedance

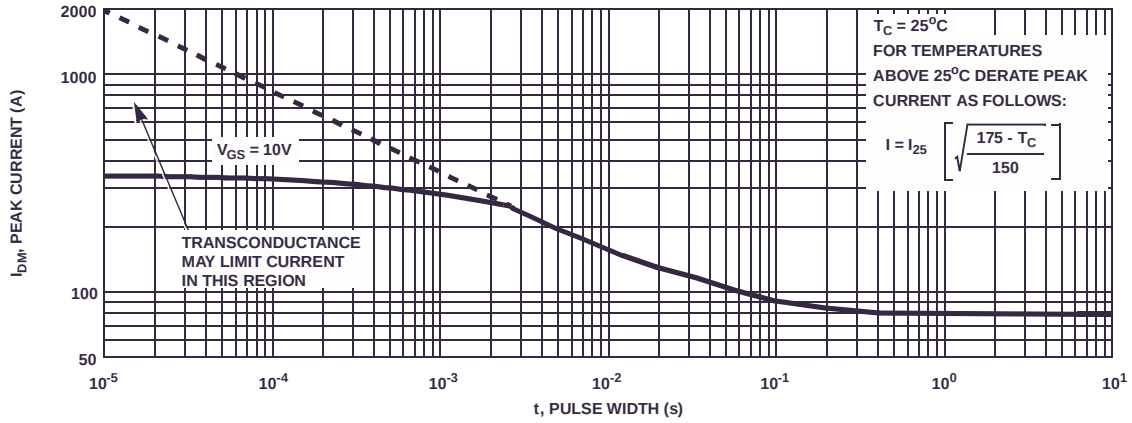

Figure 4. Peak Current Capability

©2002 Fairchild Semiconductor Corporation

Typical Characteristics T_C = 25°C unless otherwise noted

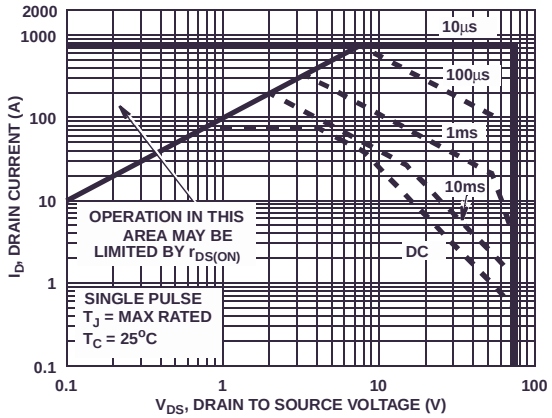

Figure 5. Forward Bias Safe Operating Area

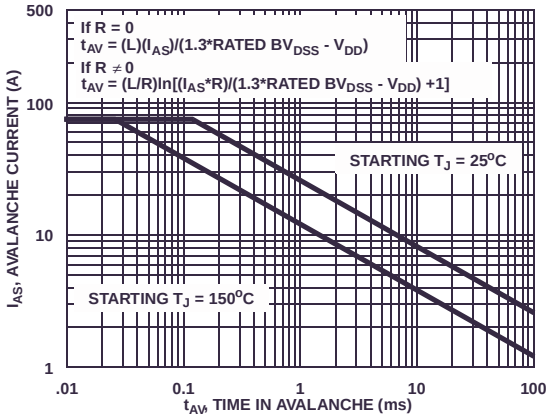

NOTE: Refer to Fairchild Application Notes AN7514 and AN7515

Figure 6. Unclamped Inductive Switching Capability

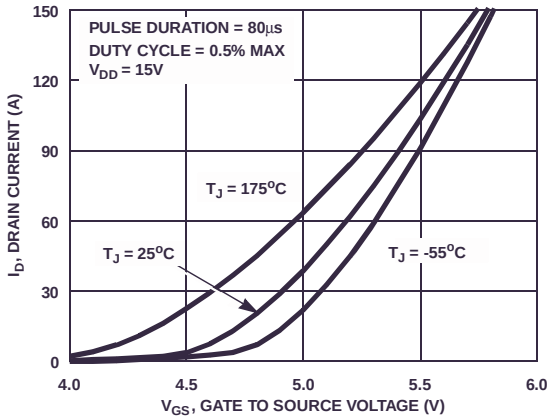

Figure 7. Transfer Characteristics

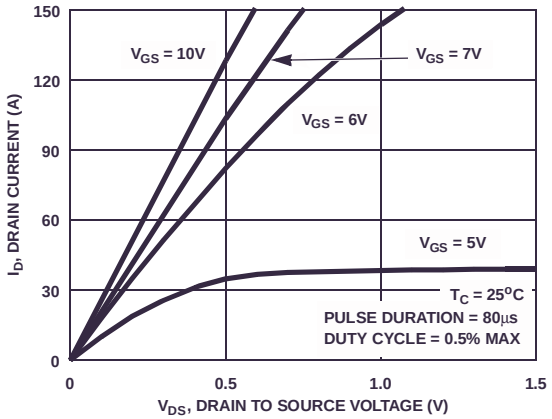

Figure 8. Saturation Characteristics

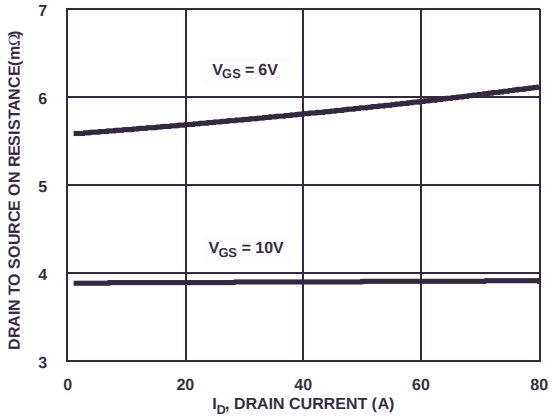

Figure 9. Drain to Source On Resistance vs Drain Current

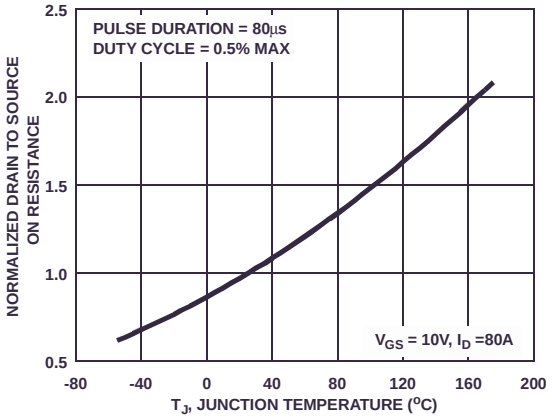

Figure 10. Normalized Drain to Source On Resistance vs Junction Temperature

©2002 Fairchild Semiconductor Corporation

Typical Characteristics T_C = 25°C unless otherwise noted

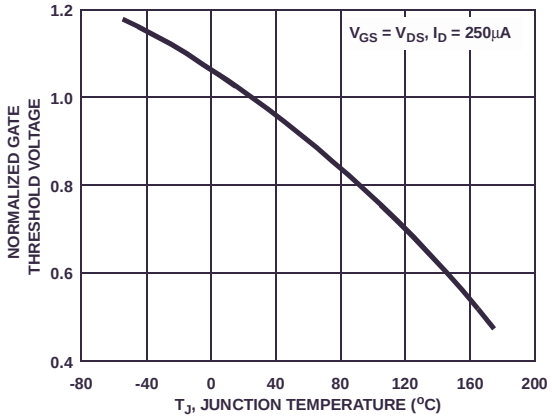

Figure 11. Normalized Gate Threshold Voltage vs Junction Temperature

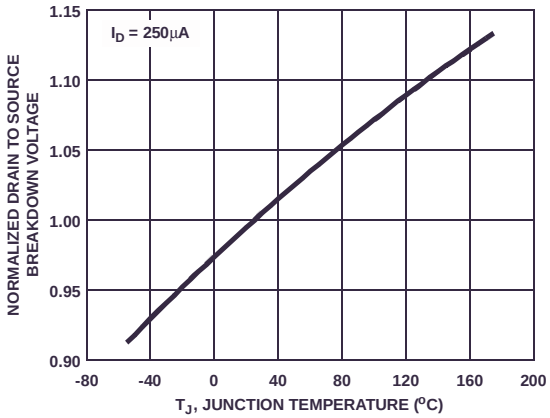

Figure 12. Normalized Drain to Source Breakdown Voltage vs Junction Temperature

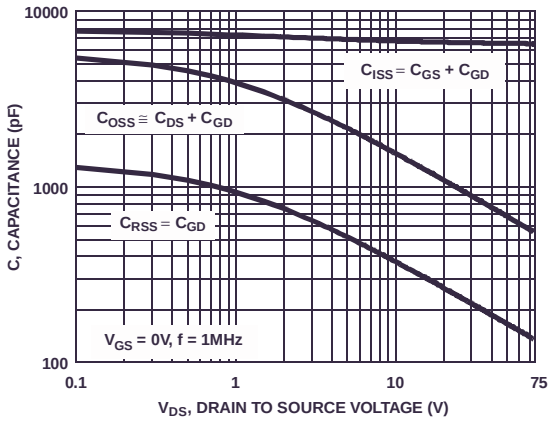

Figure 13. Capacitance vs Drain to Source Voltage

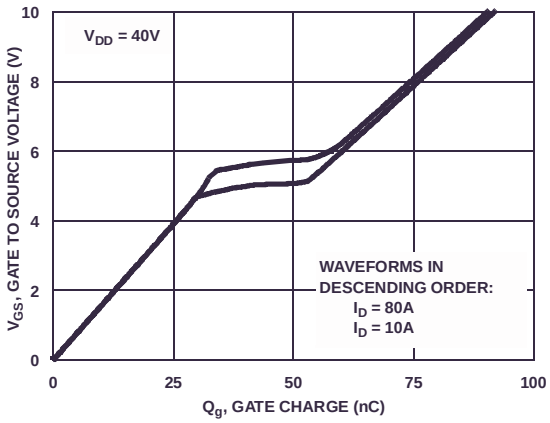

Figure 14. Gate Charge Waveforms for Constant Gate Currents

Test Circuits and Waveforms

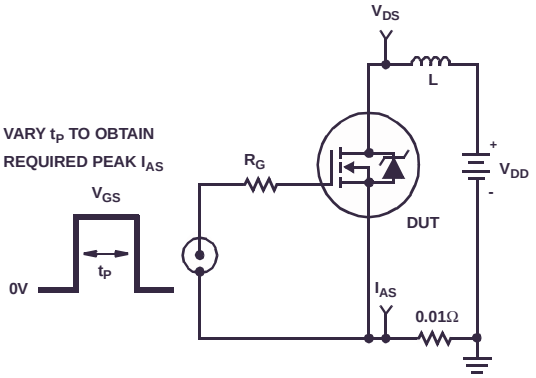

Figure 15. Unclamped Energy Test Circuit

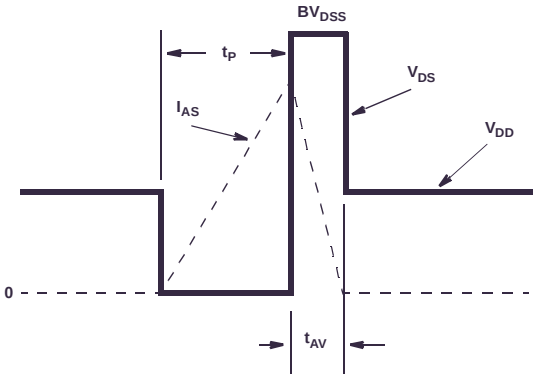

Figure 16. Unclamped Energy Waveforms

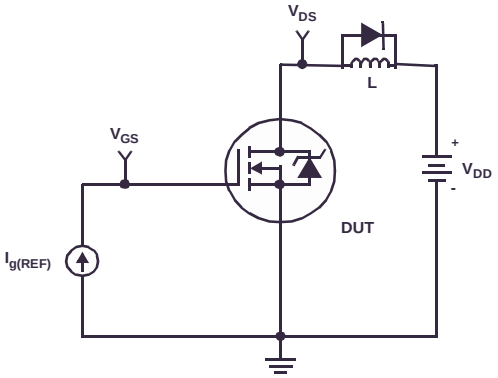

Figure 17. Gate Charge Test Circuit

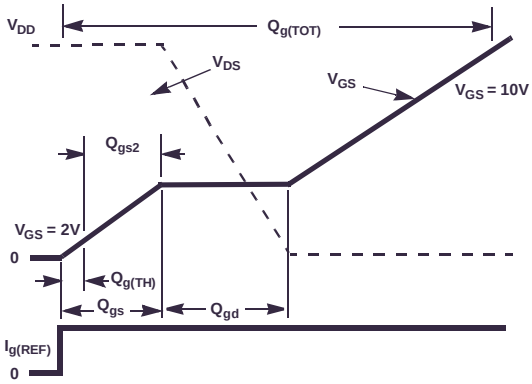

Figure 18. Gate Charge Waveforms

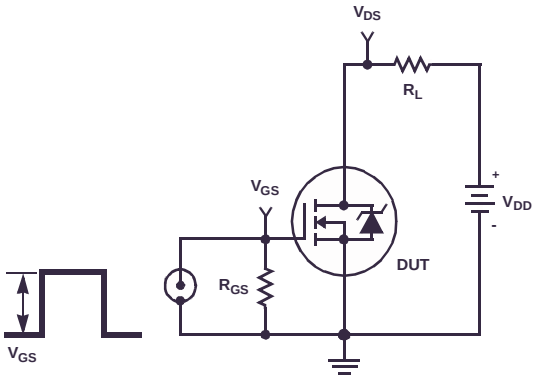

Figure 19. Switching Time Test Circuit

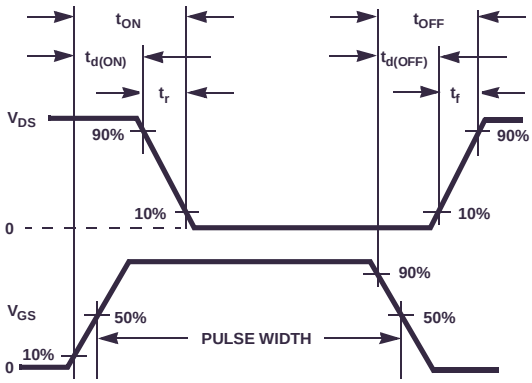

Figure 20. Switching Time Waveforms

©2002 Fairchild Semiconductor Corporation

Thermal Resistance vs. Mounting Pad Area

The maximum rated junction temperature, T_{JM}, and the thermal resistance of the heat dissipating path determines the maximum allowable device power dissipation, P_{DM}, in an application. Therefore the application's ambient temperature, T_A (^{0}C), and thermal resistance $R_{\theta JA}$ (^{0}C/W) must be reviewed to ensure that T_{JM} is never exceeded. Equation 1 mathematically represents the relationship and serves as the basis for establishing the rating of the part.

$$P_{DM} = \frac{(T_{JM} - T_A)}{R_{\theta JA}} \qquad \text{(EQ. 1)}$$

In using surface mount devices such as the TO-263 package, the environment in which it is applied will have a significant influence on the part's current and maximum power dissipation ratings. Precise determination of P_{DM} is complex and influenced by many factors:

1. Mounting pad area onto which the device is attached and whether there is copper on one side or both sides of the board.
2. The number of copper layers and the thickness of the board.
3. The use of external heat sinks.
4. The use of thermal vias.
5. Air flow and board orientation.
6. For non steady state applications, the pulse width, the duty cycle and the transient thermal response of the part, the board and the environment they are in.

Fairchild provides thermal information to assist the designer's preliminary application evaluation. Figure 21 defines the $R_{\theta JA}$ for the device as a function of the top copper (component side) area. This is for a horizontally positioned FR-4 board with 1oz copper after 1000 seconds of steady state power with no air flow. This graph provides the necessary information for calculation of the steady state junction temperature or power dissipation. Pulse applications can be evaluated using the Fairchild device Spice thermal model or manually utilizing the normalized maximum transient thermal impedance curve.

Thermal resistances corresponding to other copper areas can be obtained from Figure 21 or by calculation using Equation 2. The area, in square inches is the top copper area including the gate and source pads.

$$R_{\theta JA} = 26.51 + \frac{19.84}{(0.262 + Area)} \qquad \text{(EQ. 2)}$$

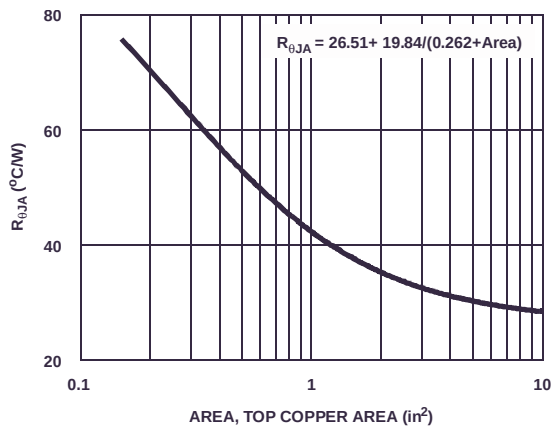

Figure 21. Thermal Resistance vs Mounting Pad Area

PSPICE Electrical Model

```
.SUBCKT FDB045AN08A0 2 1 3 ;       rev March 2002
CA  12  8 1.5e-9
CB  15  14 1.5e-9
CIN  6  8 6.4e-9

DBODY 7 5 DBODYMOD
DBREAK 5 11  DBREAKMOD
DPLCAP 10 5 DPLCAPMOD

EBREAK 11 7 17  18 82.3
EDS  14  8  5  8 1
EGS  13  8  6  8 1
ESG 6 10 6 8 1
EVTHRES 6 21 19 8  1
EVTEMP 20 6 18 22 1

IT  8  17  1

LDRAIN 2 5 1e-9
LGATE 1  9 4.81e-9
LSOURCE  3  7 4.63e-9

MMED 16 6 8 8 MMEDMOD
MSTRO 16 6 8 8 MSTROMOD
MWEAK 16 21 8 8 MWEAKMOD

RBREAK  17  18  RBREAKMOD  1
RDRAIN 50 16 RDRAINMOD 9e-4
RGATE  9  20 1.36
RLDRAIN 2 5 10
RLGATE 1 9 48.1
RLSOURCE 3 7 46.3
RSLC1 5 51 RSLCMOD 1e-6
RSLC2 5 50 1e3
RSOURCE  8  7  RSOURCEMOD 2.3e-3
RVTHRES 22 8 RVTHRESMOD  1
RVTEMP 18 19 RVTEMPMOD 1

S1A  6  12  13  8  S1AMOD
S1B  13  12  13  8  S1BMOD
S2A  6  15  14  13  S2AMOD
S2B  13  15  14  13  S2BMOD

VBAT 22 19  DC  1

ESLC 51 50 VALUE={(V(5,51)/ABS(V(5,51)))*(PWR(V(5,51)/(1e-6*250),10))}

.MODEL DBODYMOD D (IS = 2.4e-11 N = 1.04  RS = 1.76e-3  TRS1 = 2.7e-3  TRS2 = 2e-7 XTI=3.9  CJO = 4.35e-9  TT = 1e-8
M = 5.4e-1)
.MODEL DBREAKMOD D (RS = 1.5e-1  TRS1 = 1e-3  TRS2 = -8.9e-6)
.MODEL DPLCAPMOD D (CJO = 1.35e-9  IS = 1e-30  N = 10 M = 0.53)
.MODEL MMEDMOD NMOS (VTO = 3.7 KP = 9  IS =1e-30 N = 10 TOX = 1 L = 1u W = 1u RG = 1.36)
.MODEL MSTROMOD NMOS (VTO = 4.4 KP = 250  IS = 1e-30 N = 10 TOX = 1 L = 1u W = 1u)
.MODEL MWEAKMOD NMOS (VTO = 3.05 KP = 0.03 IS = 1e-30 N = 10 TOX = 1 L = 1u W = 1u RG = 1.36e1 RS = 0.1)
.MODEL RBREAKMOD RES (TC1 = 1.05e-3  TC2 = -9e-7)
.MODEL RDRAINMOD RES (TC1 = 1.9e-2  TC2 = 4e-5)
.MODEL RSLCMOD RES (TC1 = 1.3e-3 TC2 = 1e-5)
.MODEL RSOURCEMOD RES (TC1 = 1e-3 TC2 = 1e-6)
.MODEL RVTHRESMOD RES (TC1 = -6e-3 TC2 = -1.9e-5)
.MODEL RVTEMPMOD RES (TC1 = -2.4e-3  TC2 = 1e-6)

.MODEL S1AMOD VSWITCH (RON = 1e-5  ROFF = 0.1  VON = -4.0  VOFF= -1.5)
.MODEL S1BMOD VSWITCH (RON = 1e-5  ROFF = 0.1  VON = -1.5  VOFF= -4.0)
.MODEL S2AMOD VSWITCH (RON = 1e-5  ROFF = 0.1  VON = -1.0  VOFF= 0.5)
.MODEL S2BMOD VSWITCH (RON = 1e-5  ROFF = 0.1  VON = 0.5  VOFF= -1.0)

.ENDS
```

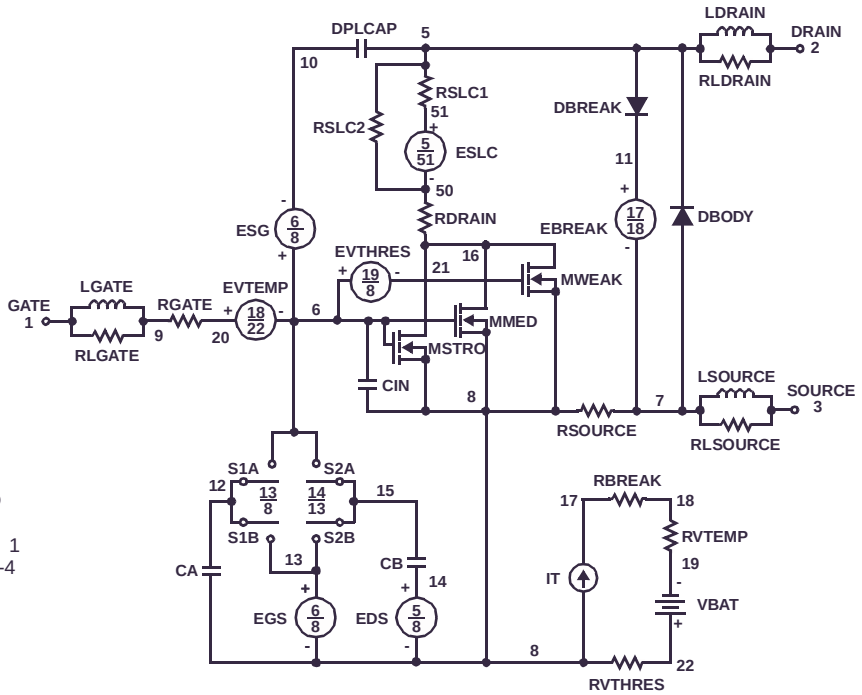

Note: For further discussion of the PSPICE model, consult **A New PSPICE Sub-Circuit for the Power MOSFET Featuring Global Temperature Options**; IEEE Power Electronics Specialist Conference Records, 1991, written by William J. Hepp and C. Frank Wheatley.

SABER Electrical Model

```
REV March 2002
template FDB045AN08A0 n2,n1,n3
electrical n2,n1,n3
{
var i iscl
dp..model dbodymod = (isl = 2.4e-11, n1 = 1.04, rs = 1.76e-3, trs1 = 2.7e-3, trs2 = 2e-7, xti = 3.9, cjo = 4.35e-9, tt = 1e-8, m = 5.4e-1)
dp..model dbreakmod = (rs = 1.5e-1, trs1 = 1e-3, trs2 = -8.9e-6)
dp..model dplcapmod = (cjo = 1.35e-9, isl =10e-30, nl =10, m = 0.53)
m..model mmedmod = (type=_n, vto = 3.7, kp = 9, is =1e-30, tox=1)
m..model mstrongmod = (type=_n, vto = 4.4, kp = 250, is = 1e-30, tox = 1)
m..model mweakmod = (type=_n, vto = 3.05, kp = 0.03, is = 1e-30, tox = 1, rs=0.1)
sw_vcsp..model s1amod = (ron = 1e-5, roff = 0.1, von = -4.0, voff = -1.5)
sw_vcsp..model s1bmod = (ron =1e-5, roff = 0.1, von = -1.5, voff = -4.0)
sw_vcsp..model s2amod = (ron = 1e-5, roff = 0.1, von = -1.0, voff = 0.5)
sw_vcsp..model s2bmod = (ron = 1e-5, roff = 0.1, von = 0.5, voff = -1.0)

c.ca n12 n8 = 1.5e-9
c.cb n15 n14 = 1.5e-9
c.cin n6 n8 = 6.4e-9

dp.dbody n7 n5 = model=dbodymod
dp.dbreak n5 n11 = model=dbreakmod
dp.dplcap n10 n5 = model=dplcapmod

i.it n8 n17 = 1

l.ldrain n2 n5 = 1e-9
l.lgate n1 n9 = 4.81e-9
l.lsource n3 n7 = 4.63e-9

m.mmed n16 n6 n8 n8 = model=mmedmod, l=1u, w=1u
m.mstrong n16 n6 n8 n8 = model=mstrongmod, l=1u, w=1u
m.mweak n16 n21 n8 n8 = model=mweakmod, l=1u, w=1u

res.rbreak n17 n18 = 1, tc1 = 1.05e-3, tc2 = -9e-7
res.rdrain n50 n16 = 9e-4, tc1 = 1.9e-2, tc2 = 4e-5
res.rgate n9 n20 = 1.36
res.rldrain n2 n5 = 10
res.rlgate n1 n9 = 48.1
res.rlsource n3 n7 = 46.3
res.rslc1 n5 n51= 1e-6, tc1 = 1e-3, tc2 =1e-5
res.rslc2 n5 n50 = 1e3
res.rsource n8 n7 = 2.3e-3, tc1 = 1e-3, tc2 =1e-6
res.rvtemp n18 n19 = 1, tc1 = -2.4e-3, tc2 = 1e-6
res.rvthres n22 n8 = 1, tc1 = -6e-3, tc2 = -1.9e-5

spe.ebreak n11 n7 n17 n18 = 82.3
spe.eds n14 n8 n5 n8 = 1
spe.egs n13 n8 n6 n8 = 1
spe.esg n6 n10 n6 n8 = 1
spe.evtemp n20 n6 n18 n22 = 1
spe.evthres n6 n21 n19 n8 = 1

sw_vcsp.s1a n6 n12 n13 n8 = model=s1amod
sw_vcsp.s1b n13 n12 n13 n8 = model=s1bmod
sw_vcsp.s2a n6 n15 n14 n13 = model=s2amod
sw_vcsp.s2b n13 n15 n14 n13 = model=s2bmod

v.vbat n22 n19 = dc=1

equations {
i (n51->n50) +=iscl
iscl: v(n51,n50) = ((v(n5,n51)/(1e-9+abs(v(n5,n51))))*((abs(v(n5,n51)*1e6/250))** 10))
}
}
```

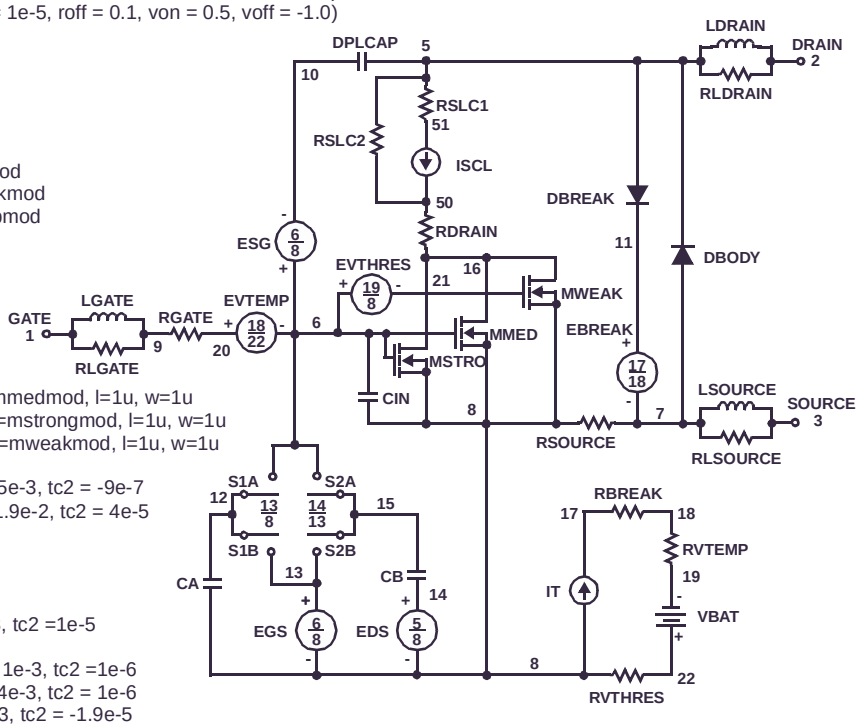

©2002 Fairchild Semiconductor Corporation

SPICE Thermal Model

REV 23 March 2002

FFDB045AN08A0T

CTHERM1 th 6 6.45e-3
CTHERM2 6 5 3e-2
CTHERM3 5 4 1.4e-2
CTHERM4 4 3 1.65e-2
CTHERM5 3 2 4.85e-2
CTHERM6 2 tl 1e-1

RTHERM1 th 6 3.24e-3
RTHERM2 6 5 8.08e-3
RTHERM3 5 4 2.28e-2
RTHERM4 4 3 1e-1
RTHERM5 3 2 1.1e-1
RTHERM6 2 tl 1.4e-1

SABER Thermal Model

```
SABER thermal model FDB045AN08A0T
template thermal_model th tl
thermal_c th, tl
{
ctherm.ctherm1 th 6 = 6.45e-3
ctherm.ctherm2 6 5 = 3e-2
ctherm.ctherm3 5 4 = 1.4e-2
ctherm.ctherm4 4 3 = 1.65e-2
ctherm.ctherm5 3 2 = 4.85e-2
ctherm.ctherm6 2 tl = 1e-1

rtherm.rtherm1 th 6 = 3.24e-3
rtherm.rtherm2 6 5 = 8.08e-3
rtherm.rtherm3 5 4 = 2.28e-2
rtherm.rtherm4 4 3 = 1e-1
rtherm.rtherm5 3 2 = 1.1e-1
rtherm.rtherm6 2 tl = 1.4e-1
}
```

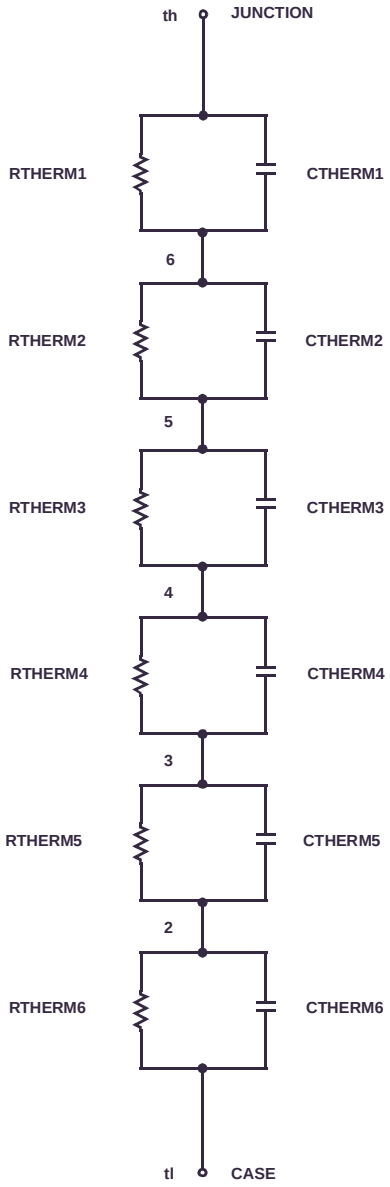

TRADEMARKS

The following are registered and unregistered trademarks Fairchild Semiconductor owns or is authorized to use and is not intended to be an exhaustive list of all such trademarks.

ACEx™	FASTr™	OPTOPLANAR™	STAR*POWER™
Bottomless™	FRFET™	PACMAN™	Stealth™
CoolFET™	GlobalOptoisolator™	POP™	SuperSOT™-3
CROSSVOLT™	GTO™	Power247™	SuperSOT™-6
DenseTrench™	HiSeC™	PowerTrench®	SuperSOT™-8
DOME™	I^2C™	QFET™	SyncFET™
EcoSPARK™	ISOPLANAR™	QS™	TinyLogic™
E^2CMOS™	LittleFET™	QT Optoelectronics™	TruTranslation™
EnSigna™	MicroFET™	Quiet Series™	UHC™
FACT™	MicroPak™	SILENT SWITCHER®	UltraFET®
FACT Quiet Series™	MICROWIRE™	SMART START™	VCX™
FAST®	OPTOLOGIC®	SPM™	

STAR*POWER is used under license

DISCLAIMER

FAIRCHILD SEMICONDUCTOR RESERVES THE RIGHT TO MAKE CHANGES WITHOUT FURTHER NOTICE TO ANY PRODUCTS HEREIN TO IMPROVE RELIABILITY, FUNCTION OR DESIGN. FAIRCHILD DOES NOT ASSUME ANY LIABILITY ARISING OUT OF THE APPLICATION OR USE OF ANY PRODUCT OR CIRCUIT DESCRIBED HEREIN; NEITHER DOES IT CONVEY ANY LICENSE UNDER ITS PATENT RIGHTS, NOR THE RIGHTS OF OTHERS.

LIFE SUPPORT POLICY

FAIRCHILD'S PRODUCTS ARE NOT AUTHORIZED FOR USE AS CRITICAL COMPONENTS IN LIFE SUPPORT DEVICES OR SYSTEMS WITHOUT THE EXPRESS WRITTEN APPROVAL OF FAIRCHILD SEMICONDUCTOR CORPORATION.

As used herein:

1. Life support devices or systems are devices or systems which, (a) are intended for surgical implant into the body, or (b) support or sustain life, or (c) whose failure to perform when properly used in accordance with instructions for use provided in the labeling, can be reasonably expected to result in significant injury to the user.

2. A critical component is any component of a life support device or system whose failure to perform can be reasonably expected to cause the failure of the life support device or system, or to affect its safety or effectiveness.

PRODUCT STATUS DEFINITIONS

Definition of Terms

Datasheet Identification	Product Status	Definition
Advance Information	Formative or In Design	This datasheet contains the design specifications for product development. Specifications may change in any manner without notice.
Preliminary	First Production	This datasheet contains preliminary data, and supplementary data will be published at a later date. Fairchild Semiconductor reserves the right to make changes at any time without notice in order to improve design.
No Identification Needed	Full Production	This datasheet contains final specifications. Fairchild Semiconductor reserves the right to make changes at any time without notice in order to improve design.
Obsolete	Not In Production	This datasheet contains specifications on a product that has been discontinued by Fairchild semiconductor. The datasheet is printed for reference information only.