FAIRCHILD SEMICONDUCTOR®

FKPF2N80

Application Explanation

- Switching mode power supply, light dimmer, electric flasher unit, hair drier
- TV sets, stereo, refrigerator, washing machine
- Electric blanket, solenoid driver, small motor control
- Photo copier, electric tool

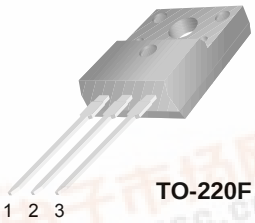

TO-220F

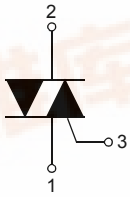

1: T_1
2: T_2
3: Gate

Bi-Directional Triode Thyristor Planar Silicon

Absolute Maximum Ratings T_C=25°C unless otherwise noted

Symbol	Parameter	Rating	Units
V_{DRM}	Repetitive Peak Off-State Voltage (Note1)	800	V

Symbol	Parameter	Conditions		Rating	Units
$I_{T\ (RMS)}$	RMS On-State Current	Commercial frequency, sine full wave 360° conduction, T_C=115°C		2	A
I_{TSM}	Surge On-State Current	Sinewave 1 full cycle, peak value, non-repetitive	50Hz	9	A
			60Hz	10	A
I^2t	I^2t for Fusing	Value corresponding to 1 cycle of halfwave, surge on-state current, tp=10ms		0.4	A^2s
di/dt	Critical Rate of Rise of On-State Current	I_G = 2x I_{GT}, tr ≤ 100ns		50	A/µs
P_{GM}	Peak Gate Power Dissipation			3	W
$P_{G\ (AV)}$	Average Gate Power Dissipation			0.3	W
V_{GM}	Peak Gate Voltage			10	V
I_{GM}	Peak Gate Current			1.6	A
T_J	Junction Temperature			- 40 ~ 125	°C
T_{STG}	Storage Temperature			- 40 ~ 125	°C
V_{iso}	Isolation Voltage	Ta=25°C, AC 1 minute, T_1 T_2 G terminal to case		1500	V

Thermal Characteristic

Symbol	Parameter	Test Condition	Min.	Typ.	Max.	Units
$R_{th(J-A)}$	Thermal Resistance	Junction to case (Note 4)	-	-	4.5	°C/W

Electrical Characteristics T_C=25°C unless otherwise noted

Symbol	Parameter		Test Condition		Min.	Typ.	Max.	Units
I_{DRM}	Repetieive Peak Off-State Current		V_{DRM} applied		-	-	20	µA
V_{TM}	On-State Voltage		T_C=25°C, I_{TM}=3A Instantaneous measurement		-	-	1.6	V
V_{GT}	Gate Trigger Voltage (Note 2)	I	V_D=12V, R_L=20Ω	T2(+), Gate (+)	-	-	1.5	V
		II		T2(+), Gate (-)	-	-	1.5	V
		III		T2(-), Gate (-)	-	-	1.5	V
I_{GT}	Gate Trigger Current (Note 2)	I	V_D=12V, R_L=20Ω	T2(+), Gate (+)	-	-	10	mA
		II		T2(+), Gate (-)	-	-	10	mA
		III		T2(-), Gate (-)	-	-	10	mA
V_{GD}	Gate Non-Trigger Voltage		T_J=125°C, V_D=1/2V_{DRM}		0.2	-	-	V
I_H	Holding Current		V_D = 12V, I_{TM} = 1A		-	-	10	mA
I_L	Latching Current	I, III	V_D = 12V, I_G = 1.2I_{GT}		-	-	10	mA
		II			-	-	10	mA
dv/dt	Critical Rate of Rise of Off-State Voltag		V_{DRM} = Rated, T_j = 125°C, Exponential Rise		-	500	-	V/µs
$(dv/dt)_C$	Critical-Rate of Rise of Off-State Commutating Voltage (Note 3)				5	-	-	V/µs

Notes:
1. Gate Open
2. Measurement using the gate trigger characteristics measurement circuit
3. The critical-rate of rise of the off-state commutating voltage is shown in the table below
4. The contact thermal resistance $R_{TH(c-f)}$ in case of greasing is 0.5 °C/W

V_{DRM} (V)	Test Condition	Commutating voltage and current waveforms (inductive load)
FKPF2N80	1. Junction Temperature T_J=125°C 2. Rate of decay of on-state commutating current $(di/dt)_C$ = - 0.5A/ms 3. Peak off-state voltage V_D = 400V	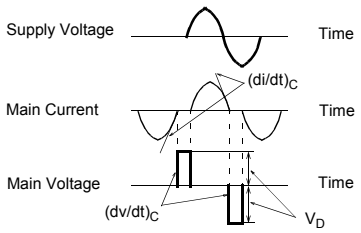

Quadrant Definitions for a Triac

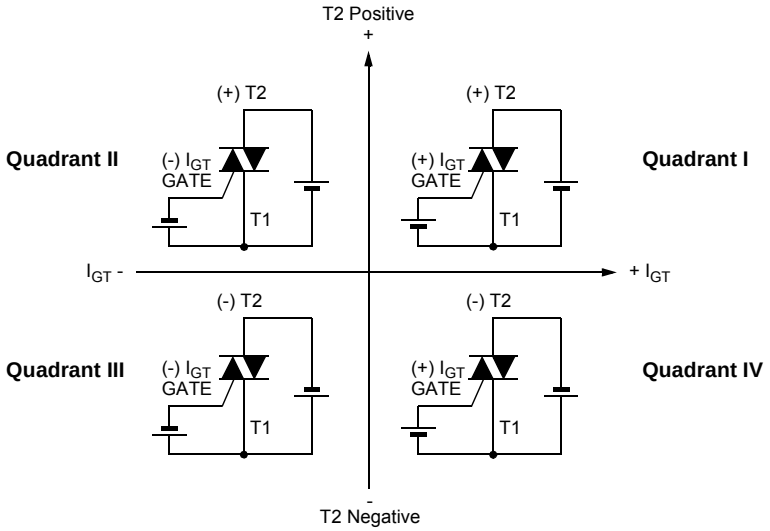

Typical Curves

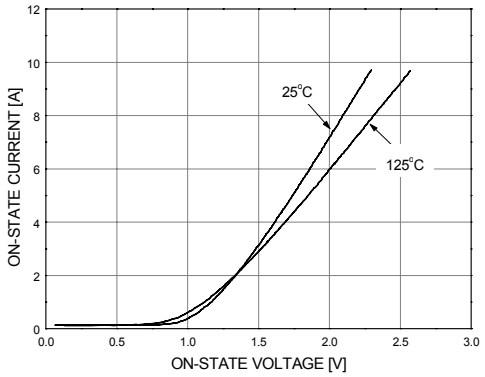

Figure 1. Maximum On-state Characteristics

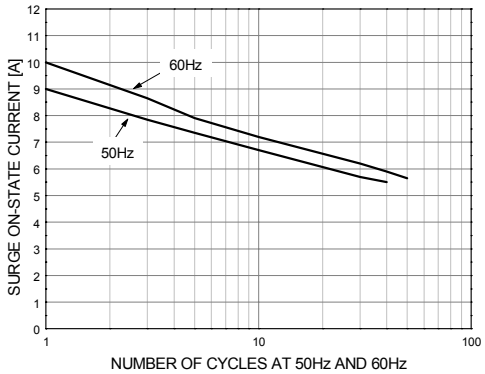

Figure 2. Rated Surge On-state Current

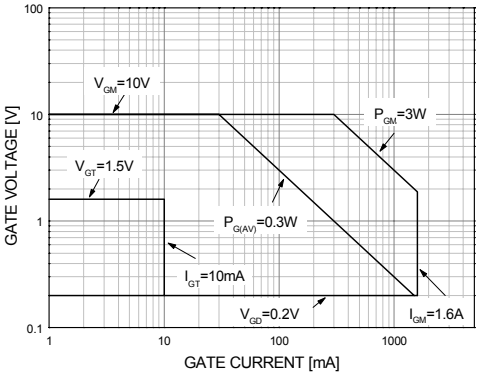

Figure 3. Gate Characteristics

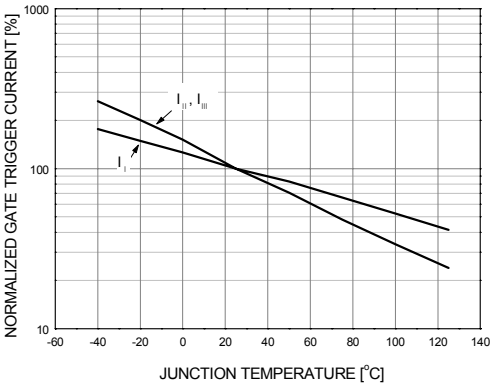

Figure 4. Gate Trigger Current vs Tj

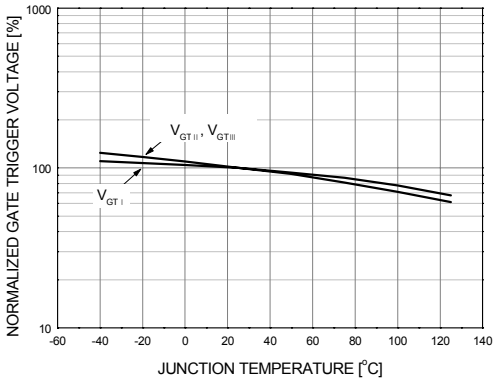

Figure 5. Gate Trigger Voltage vs Tj

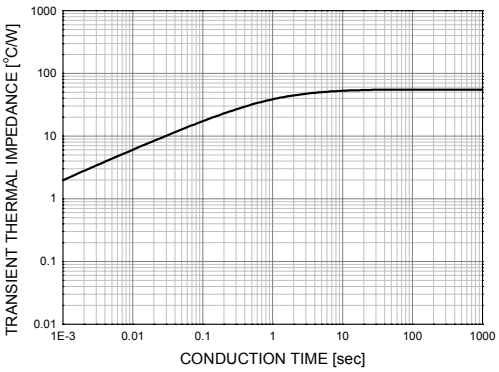

Figure 6. Transient Thermal Impedance

Typical Curves (Continues)

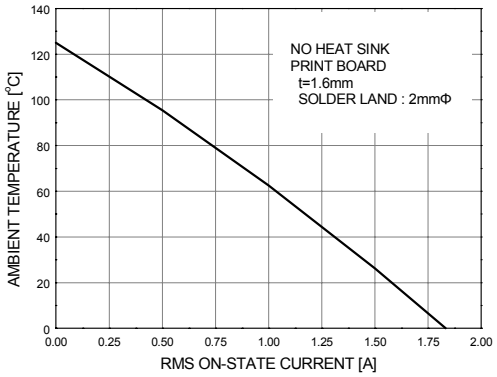

Figure 7. Allowable Ambient Temperature vs Rms On-state Current

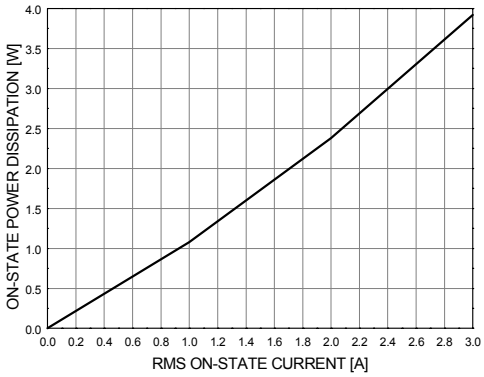

Figure 8. Maximum On-state Power Dissipation

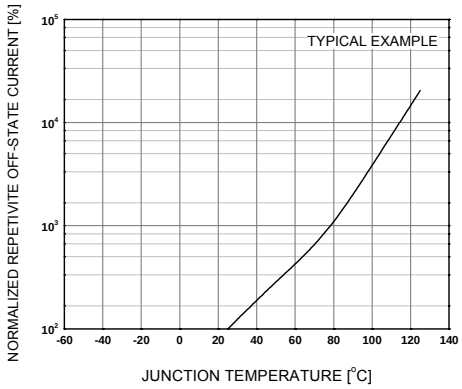

Figure 9. Repetitive Peak Off-state Current vs Junction Temperature

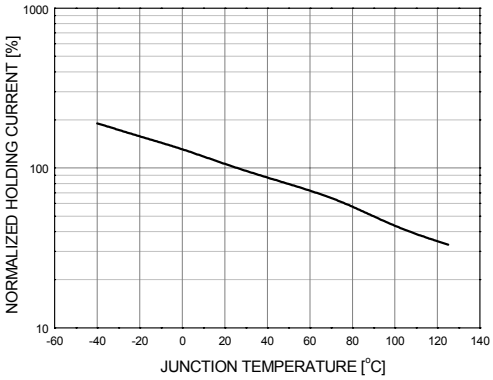

Figure 10. Holding Current vs Junction Temperature

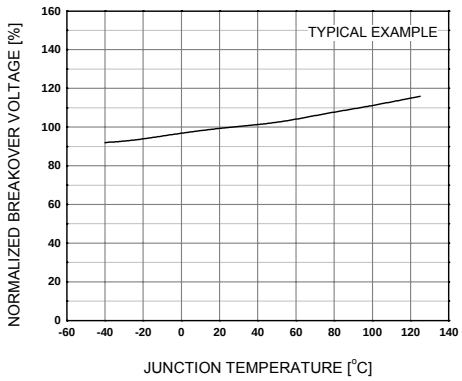

Figure 11. Breakover Voltage vs Junction Temperature

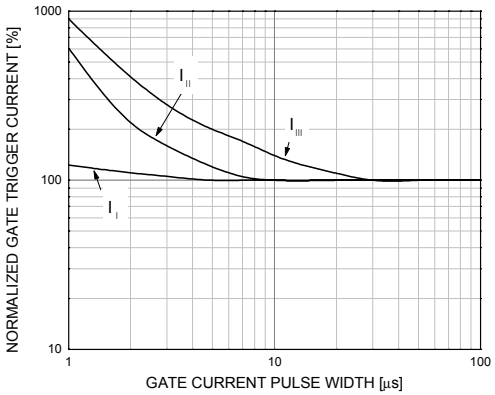

Figure 12. Gate Trigger Current vs Gate Current Pulse Width

Typical Curves (Continues)

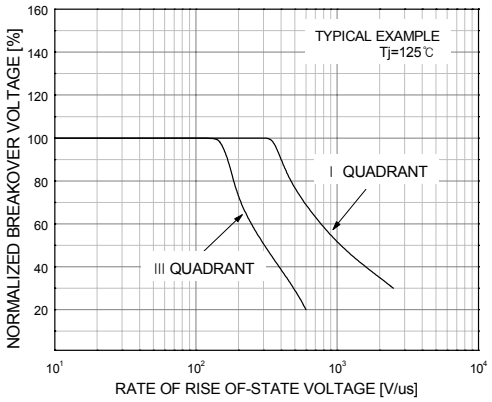

Figure 13. Breakover Voltage vs Rate of Rise of Off-state Voltage

Package Dimension

TO-220F

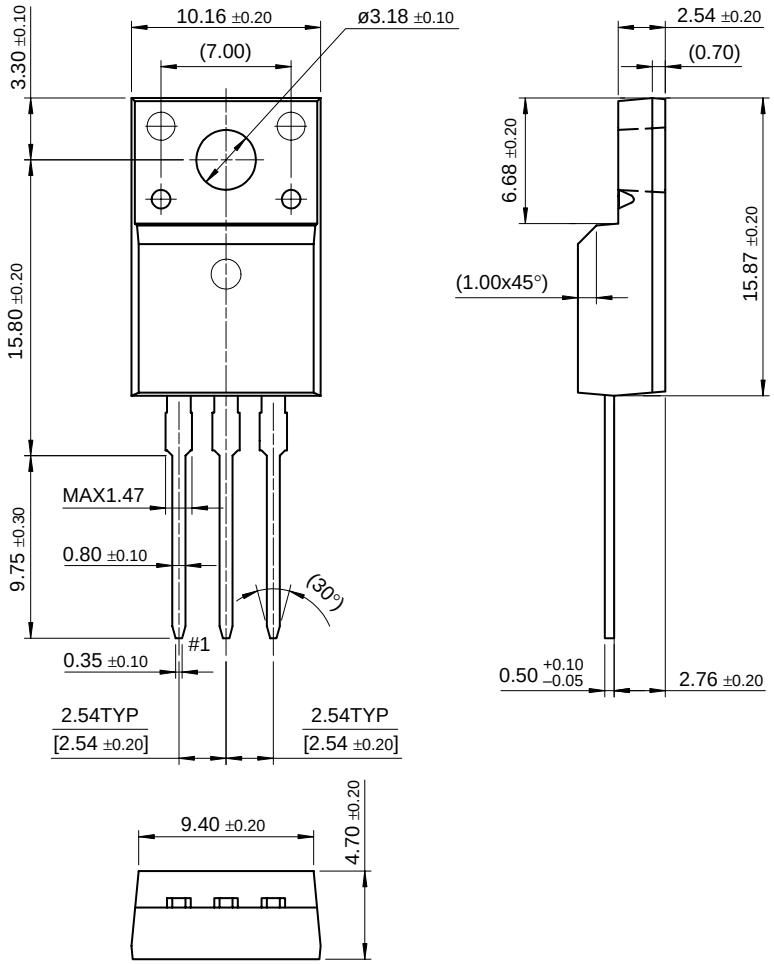

Dimensions in Millimeters

TRADEMARKS

The following are registered and unregistered trademarks Fairchild Semiconductor owns or is authorized to use and is not intended to be an exhaustive list of all such trademarks.

ACEx™	FACT Quiet Series™	ImpliedDisconnect™	PACMAN™	SPM™
ActiveArray™	FAST®	ISOPLANAR™	POP™	Stealth™
Bottomless™	FASTr™	LittleFET™	Power247™	SuperFET™
CoolFET™	FPS™	MICROCOUPLER™	PowerSaver™	SuperSOT™-3
CROSSVOLT™	FRFET™	MicroFET™	PowerTrench®	SuperSOT™-6
DOME™	GlobalOptoisolator™	MicroPak™	QFET®	SuperSOT™-8
EcoSPARK™	GTO™	MICROWIRE™	QS™	SyncFET™
E^2CMOS™	HiSeC™	MSX™	QT Optoelectronics™	TinyLogic®
EnSigna™	I^2C™	MSXPro™	Quiet Series™	TINYOPTO™
FACT™	*i-Lo*™	OCX™	RapidConfigure™	TruTranslation™
Across the board. Around the world.™		OCXPro™	RapidConnect™	UHC™
The Power Franchise®		OPTOLOGIC®	SILENT SWITCHER®	UltraFET®
Programmable Active Droop™		OPTOPLANAR™	SMART START™	VCX™

DISCLAIMER

FAIRCHILD SEMICONDUCTOR RESERVES THE RIGHT TO MAKE CHANGES WITHOUT FURTHER NOTICE TO ANY PRODUCTS HEREIN TO IMPROVE RELIABILITY, FUNCTION OR DESIGN. FAIRCHILD DOES NOT ASSUME ANY LIABILITY ARISING OUT OF THE APPLICATION OR USE OF ANY PRODUCT OR CIRCUIT DESCRIBED HEREIN; NEITHER DOES IT CONVEY ANY LICENSE UNDER ITS PATENT RIGHTS, NOR THE RIGHTS OF OTHERS.

LIFE SUPPORT POLICY

FAIRCHILD'S PRODUCTS ARE NOT AUTHORIZED FOR USE AS CRITICAL COMPONENTS IN LIFE SUPPORT DEVICES OR SYSTEMS WITHOUT THE EXPRESS WRITTEN APPROVAL OF FAIRCHILD SEMICONDUCTOR CORPORATION.
As used herein:

1. Life support devices or systems are devices or systems which, (a) are intended for surgical implant into the body, or (b) support or sustain life, or (c) whose failure to perform when properly used in accordance with instructions for use provided in the labeling, can be reasonably expected to result in significant injury to the user.

2. A critical component is any component of a life support device or system whose failure to perform can be reasonably expected to cause the failure of the life support device or system, or to affect its safety or effectiveness.

PRODUCT STATUS DEFINITIONS

Definition of Terms

Datasheet Identification	Product Status	Definition
Advance Information	Formative or In Design	This datasheet contains the design specifications for product development. Specifications may change in any manner without notice.
Preliminary	First Production	This datasheet contains preliminary data, and supplementary data will be published at a later date. Fairchild Semiconductor reserves the right to make changes at any time without notice in order to improve design.
No Identification Needed	Full Production	This datasheet contains final specifications. Fairchild Semiconductor reserves the right to make changes at any time without notice in order to improve design.
Obsolete	Not In Production	This datasheet contains specifications on a product that has been discontinued by Fairchild semiconductor. The datasheet is printed for reference information only.