查询STTH12R066G-TR供应商 捷多邦，专业PCB打样工厂，24小时加急出货

STTH12R06

TURBO 2 ULTRAFAST HIGH VOLTAGE RECTIFIER

Table 1: Main Product Characteristics

$I_{F(AV)}$	12 A
V_{RRM}	600 V
I_{RM} (typ)	7 A
T_j	175°C
V_F (typ)	1.4 V
t_{rr} (max)	25 ns

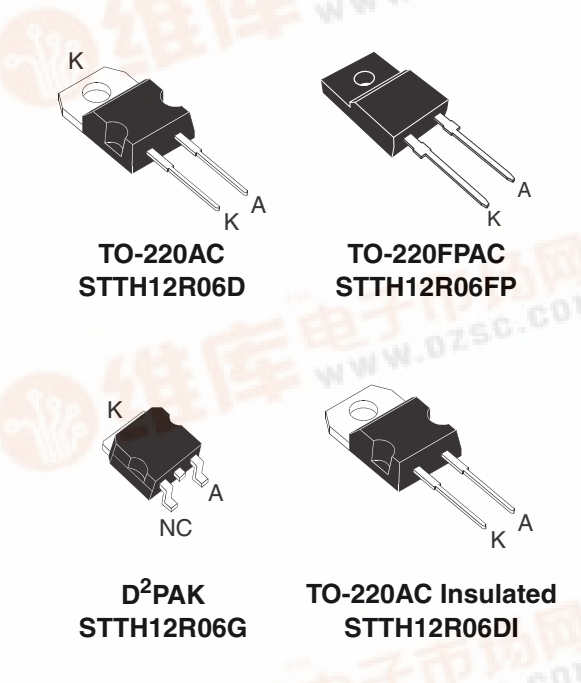

FEATURES AND BENEFITS

- Ultrafast switching
- Low reverse recovery current
- Low thermal resistance
- Reduces switching losses

DESCRIPTION

The STTH12R06, which is using ST Turbo 2 600V technology, is specially suited as boost diode in continuous mode power factor corrections and hard switching conditions.
This device is also intended for use as a free wheeling diode in power supplies and other power switching applications.

Table 2: Order Codes

Part Number	Marking
STTH12R06D	STTH12R06D
STTH12R06FP	STTH12R06FP
STTH12R06G	STTH12R06G
STTH12R06G-TR	STTH12R06G
STTH12R06DI	STTH12R06DI
STTH12R06DIRG	STTH12R06DI

找PDF 维库一下 pdf.dzsc.com

Table 3: Absolute Ratings (limiting values)

Symbol	Parameter			Value	Unit
V_{RRM}	Repetitive peak reverse voltage			600	V
$I_{F(RMS)}$	RMS forward voltage	TO-220AC / TO-220FPAC / D^2PAK		30	A
		TO-220AC Ins.		24	
$I_{F(AV)}$	Average forward current $\delta = 0.5$	TO-220AC / D^2PAK	Tc = T125°C	12	A
		TO-220FPAC	Tc = 50°C		
		TO-220AC Ins.	Tc = 80°C		
I_{FSM}	Surge non repetitive forward current		tp = 10ms sinusoidal	100	A
T_{stg}	Storage temperature range			-65 to + 175	°C
T_j	Maximum operating junction temperature			175	°C

Table 4: Thermal Resistance

Symbol	Parameter		Value (max).	Unit
$R_{th(j-c)}$	Junction to case	TO-220AC / D^2PAK	1.7	°C/W
		TO-220FPAC	4.4	
		TO-220AC Ins.	3.3	

Table 5: Static Electrical Characteristics

Symbol	Parameter	Test conditions		Min.	Typ	Max.	Unit
I_R	Reverse leakage current	T_j = 25°C	$V_R = V_{RRM}$			45	µA
		T_j = 125°C			50	600	
V_F	Forward voltage drop	T_j = 25°C	I_F = 12A			2.9	V
		T_j = 125°C			1.4	1.8	

To evaluate the conduction losses use the following equation: $P = 1.16 \times I_{F(AV)} + 0.053\ I_F^2{}_{(RMS)}$

Table 6: Dynamic Characteristics

Symbol	Parameter	Test conditions		Min.	Typ	Max.	Unit
t_{rr}	Reverse recovery time	T_j = 25°C	I_F = 0.5A Irr = 0.25A I_R =1A			25	ns
			I_F = 1A dI_F/dt = -50 A/µs V_R =30V			45	
I_{RM}	Reverse recovery current	T_j = 125°C	I_F = 12A V_R = 400V dI_F/dt = -200 A/µs		7.0	8.4	A
S factor	Softness factor				0.2		
Qrr	Reverse recovery charges				180		nC
t_{fr}	Forward recovery time	T_j = 25°C	I_F = 12A dI_F/dt = 96 A/µs $V_{FR} = 1.1 \times V_{Fmax}$			200	ns
V_{FP}	Forward recovery voltage					5.5	V

Figure 1: Conduction losses versus average current

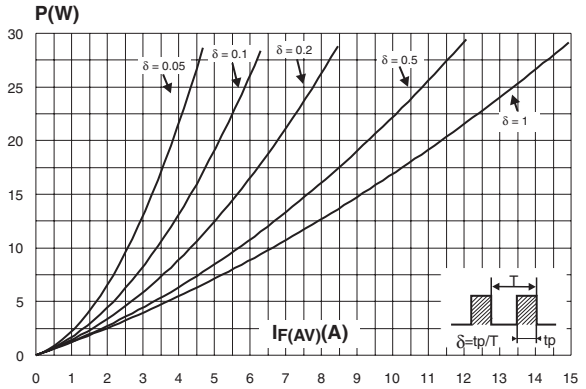

Figure 2: Forward voltage drop versus forward current

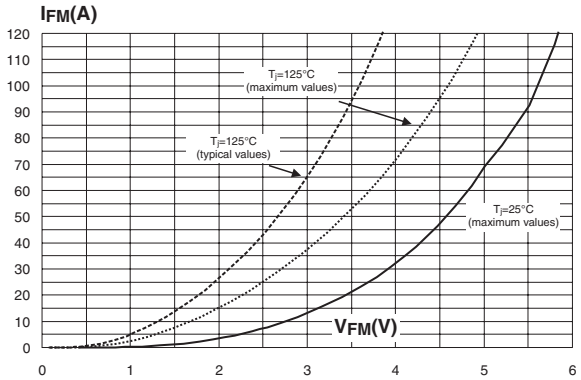

Figure 3: Relative variation of thermal impedance junction to case versus pulse duration (TO-220AC, TO-220AC Ins., D^{2}PAK))

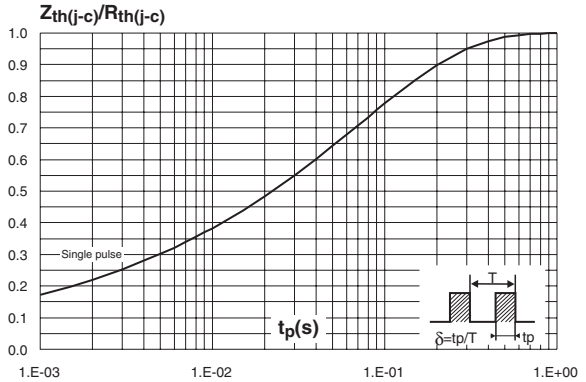

Figure 4: Relative variation of thermal impedance junction to case versus pulse duration (TO-220FPAC)

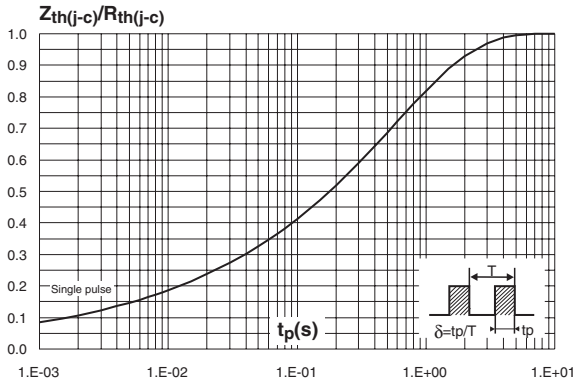

Figure 5: Peak reverse recovery current versus dI_F/dt (typical values)

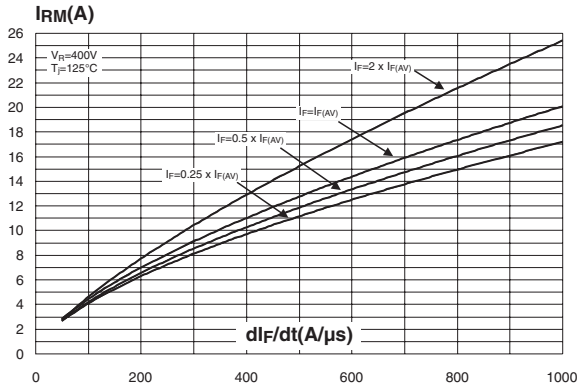

Figure 6: Reverse recovery time versus dI_F/dt (typical values)

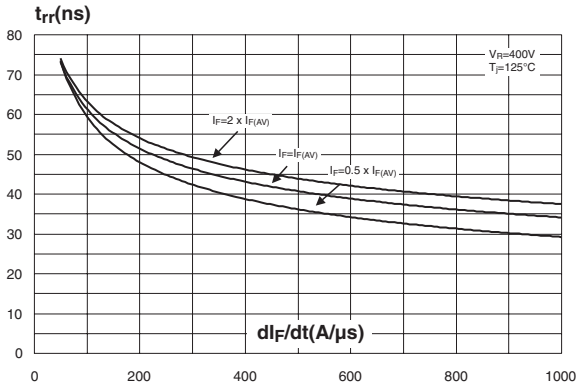

Figure 7: Reverse recovery charges versus dI_F/dt (typical values)

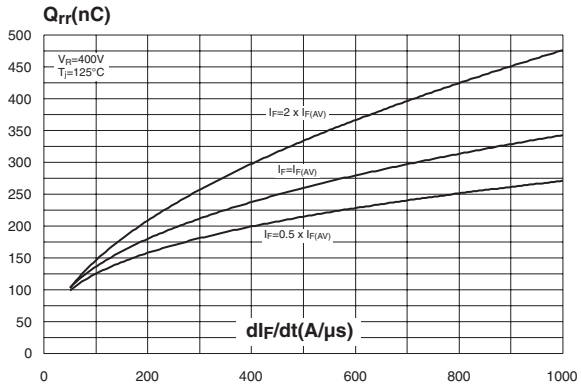

Figure 8: Softness factor versus dI_F/dt (typical values)

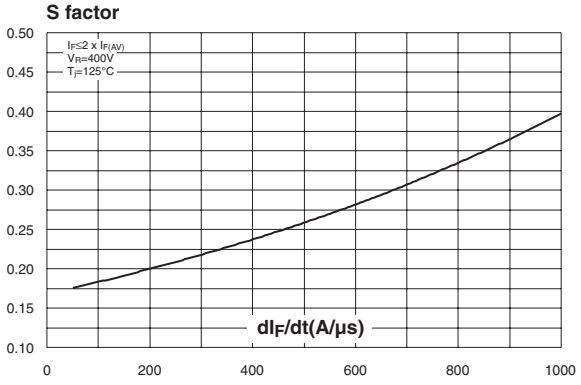

Figure 9: Relative variations of dynamic parameters versus junction temperature

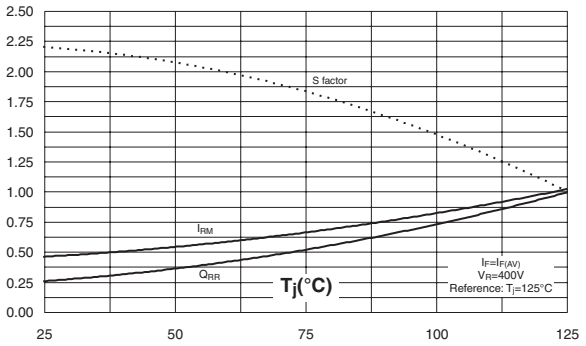

Figure 10: Transient peak forward voltage versus dI_F/dt (typical values)

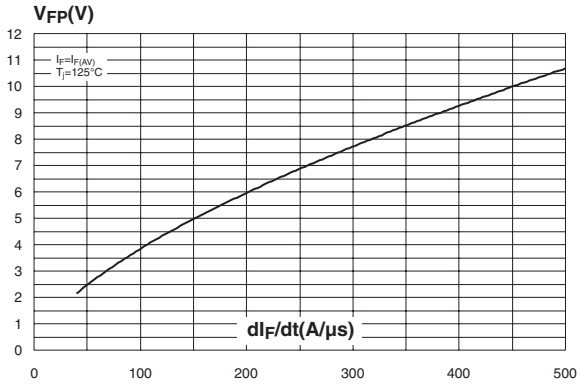

Figure 11: Forward recovery time versus dI_F/dt (typical values)

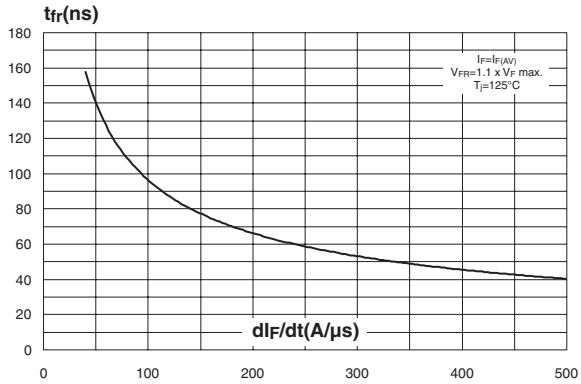

Figure 12: Junction capacitance versus reverse voltage applied (typical values)

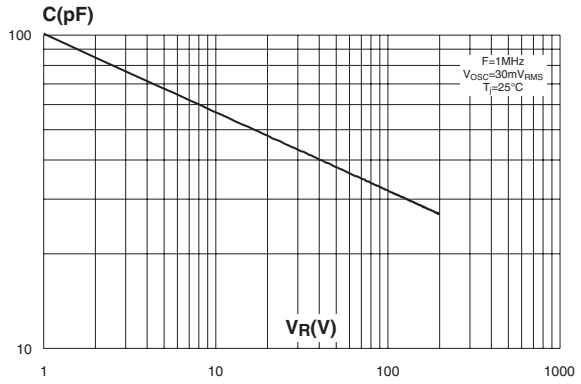

Figure 13: Thermal resistance junction to ambient versus copper surface under tab (epoxy FR4, e_{CU}=35µm) (D^2PAK)

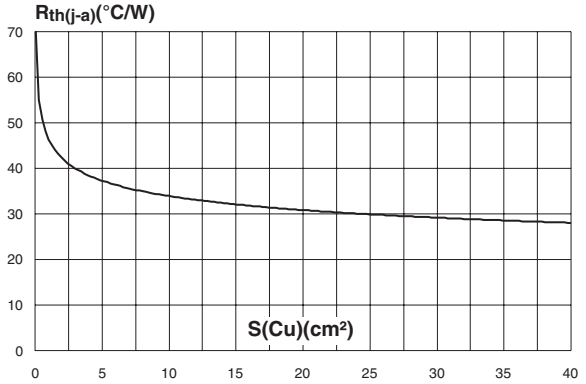

Figure 14: TO-220FPAC Package Mechanical Data

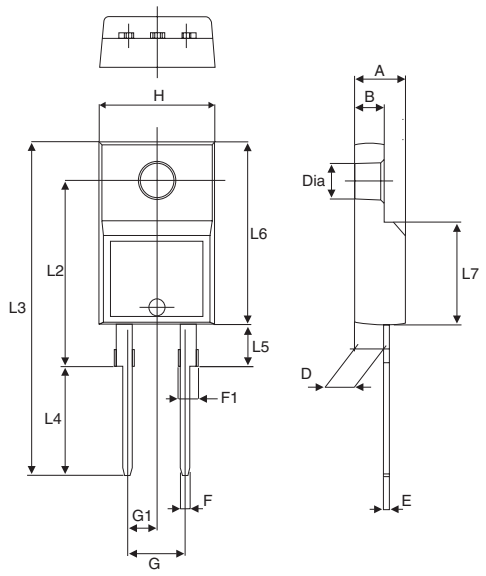

REF.	DIMENSIONS			
	Millimeters		Inches	
	Min.	Max.	Min.	Max.
A	4.4	4.6	0.173	0.181
B	2.5	2.7	0.098	0.106
D	2.5	2.75	0.098	0.108
E	0.45	0.70	0.017	0.027
F	0.75	1	0.030	0.039
F1	1.15	1.70	0.045	0.067
F2	1.15	1.70	0.045	0.067
G	4.95	5.20	0.195	0.204
G1	2.40	2.70	0.094	0.106
H	10	10.4	0.393	0.409
L2	16 Typ.		0.63 Typ.	
L3	28.6	30.6	1.126	1.204
L4	9.8	10.6	0.385	0.417
L6	15.9	16.4	0.626	0.645
L7	9.00	9.30	0.354	0.366
Dia.	3	3.20	0.118	0.126

Figure 15: D²PAK Package Mechanical Data

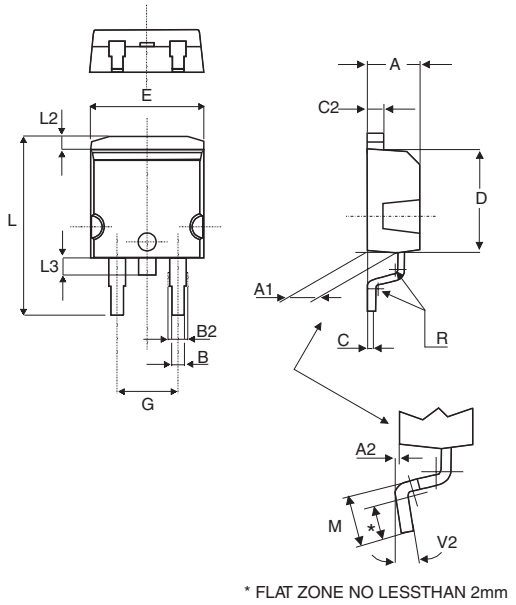

REF.	DIMENSIONS			
	Millimeters		Inches	
	Min.	Max.	Min.	Max.
A	4.40	4.60	0.173	0.181
A1	2.49	2.69	0.098	0.106
A2	0.03	0.23	0.001	0.009
B	0.70	0.93	0.027	0.037
B2	1.14	1.70	0.045	0.067
C	0.45	0.60	0.017	0.024
C2	1.23	1.36	0.048	0.054
D	8.95	9.35	0.352	0.368
E	10.00	10.40	0.393	0.409
G	4.88	5.28	0.192	0.208
L	15.00	15.85	0.590	0.624
L2	1.27	1.40	0.050	0.055
L3	1.40	1.75	0.055	0.069
M	2.40	3.20	0.094	0.126
R	0.40 typ.		0.016 typ.	
V2	0°	8°	0°	8°

Figure 16: D²PAK Foot Print Dimensions
(in millimeters)

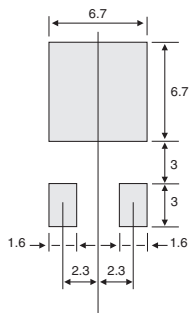

Figure 17: TO-220AC Package Mechanical Data

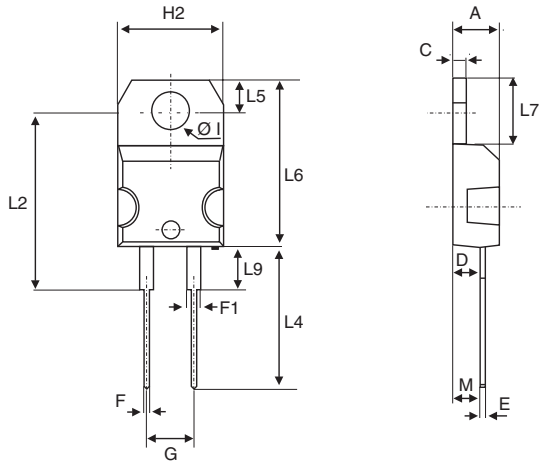

REF.	DIMENSIONS			
	Millimeters		Inches	
	Min.	Max.	Min.	Max.
A	4.40	4.60	0.173	0.181
C	1.23	1.32	0.048	0.051
D	2.40	2.72	0.094	0.107
E	0.49	0.70	0.019	0.027
F	0.61	0.88	0.024	0.034
F1	1.14	1.70	0.044	0.066
G	4.95	5.15	0.194	0.202
H2	10.00	10.40	0.393	0.409
L2	16.40 typ.		0.645 typ.	
L4	13.00	14.00	0.511	0.551
L5	2.65	2.95	0.104	0.116
L6	15.25	15.75	0.600	0.620
L7	6.20	6.60	0.244	0.259
L9	3.50	3.93	0.137	0.154
M	2.6 typ.		0.102 typ.	
Diam. I	3.75	3.85	0.147	0.151

Figure 18: TO-220AC Insulated Package Mechanical Data

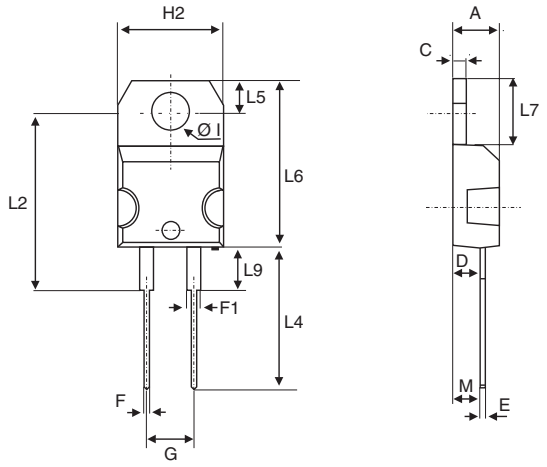

REF.	DIMENSIONS			
	Millimeters		Inches	
	Min.	Max.	Min.	Max.
A	4.40	4.60	0.173	0.181
C	1.23	1.32	0.048	0.051
D	2.40	2.72	0.094	0.107
E	0.49	0.70	0.019	0.027
F	0.61	0.88	0.024	0.034
F1	1.14	1.70	0.044	0.066
G	4.95	5.15	0.194	0.202
H2	10.00	10.40	0.393	0.409
L2	16.40 typ.		0.645 typ.	
L4	13.00	14.00	0.511	0.551
L5	2.65	2.95	0.104	0.116
L6	15.25	15.75	0.600	0.620
L7	6.20	6.60	0.244	0.259
L9	3.50	3.93	0.137	0.154
M	2.6 typ.		0.102 typ.	
Diam. I	3.75	3.85	0.147	0.151

Table 7: Ordering Information

Ordering type	Marking	Package	Weight	Base qty	Delivery mode
STTH12R06D	STTH12R06D	TO-220AC	1.90 g	50	Tube
STTH12R06G	STTH12R06G	D^2PAK	1.48 g	50	Tube
STTH12R066G-TR	STTH12R06G	D^2PAK	1.48 g	1000	Tape & reel
STTH12R06FP	STTH12R06FP	TO-220FPAC	1.70 g	50	Tube
STTH12R06DI	STTH12R06DI	TO-220AC Ins.	1.86 g	250	Box
STTH12R06DIRG	STTH12R06DI	TO-220AC Ins.	1.86 g	50	Tube

- Epoxy meets UL94, V0
- Cooling method: by conduction (C)
- Recommended torque value: 0.8 m.N. (TO-220FPAC) / 0.55 m.N. (TO-220AC)
- Maximum torque value: 1.0 m.N. (TO-220FPAC) / 0.70 m.N. (TO-220AC)

Table 8: Revision History

Date	Revision	Description of Changes
January-2002	1	First issue
18-Oct-2004	2	D^2PAK and TO-220AC Insulated packages added

Information furnished is believed to be accurate and reliable. However, STMicroelectronics assumes no responsibility for the consequences of use of such information nor for any infringement of patents or other rights of third parties which may result from its use. No license is granted by implication or otherwise under any patent or patent rights of STMicroelectronics. Specifications mentioned in this publication are subject to change without notice. This publication supersedes and replaces all information previously supplied. STMicroelectronics products are not authorized for use as critical components in life support devices or systems without express written approval of STMicroelectronics.

The ST logo is a registered trademark of STMicroelectronics.
All other names are the property of their respective owners

© 2004 STMicroelectronics - All rights reserved

STMicroelectronics group of companies
Australia - Belgium - Brazil - Canada - China - Czech Republic - Finland - France - Germany - Hong Kong - India - Israel - Italy - Japan - Malaysia - Malta - Morocco - Singapore - Spain - Sweden - Switzerland - United Kingdom - United States of America
www.st.com