查询IRG4PC30S供应商 捷多邦，专业PCB打样工厂，24小时加急出货

International
IOR Rectifier

PD - 91586A

IRG4PC30S

INSULATED GATE BIPOLAR TRANSISTOR

Standard Speed IGBT

Features

- Standard: Optimized for minimum saturation voltage and low operating frequencies (< 1kHz)
- Generation 4 IGBT design provides tighter parameter distribution and higher efficiency than Generation 3
- Industry standard TO-247AC package

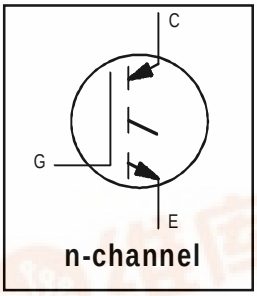

V_{CES} = 600V

$V_{CE(on)\ typ.}$ = 1.4V

@V_{GE} = 15V, I_C = 18A

Benefits

- Generation 4 IGBTs offer highest efficiency available
- IGBTs optimized for specified application conditions
- Designed to be a "drop-in" replacement for equivalent industry-standard Generation 3 IR IGBTs

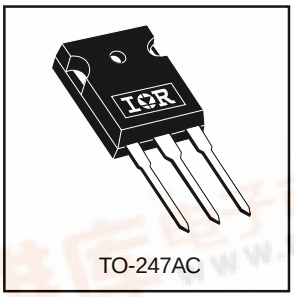

Absolute Maximum Ratings

	Parameter	Max.	Units
V_{CES}	Collector-to-Emitter Breakdown Voltage	600	V
I_C @ T_C = 25°C	Continuous Collector Current	34	A
I_C @ T_C = 100°C	Continuous Collector Current	18	
I_{CM}	Pulsed Collector Current ①	68	
I_{LM}	Clamped Inductive Load Current ②	68	
V_{GE}	Gate-to-Emitter Voltage	± 20	V
E_{ARV}	Reverse Voltage Avalanche Energy ③	10	mJ
P_D @ T_C = 25°C	Maximum Power Dissipation	100	W
P_D @ T_C = 100°C	Maximum Power Dissipation	42	
T_J T_{STG}	Operating Junction and Storage Temperature Range	-55 to + 150	°C
	Soldering Temperature, for 10 seconds	300 (0.063 in. (1.6mm) from case)	
	Mounting torque, 6-32 or M3 screw.	10 lbf•in (1.1N•m)	

Thermal Resistance

	Parameter	Typ.	Max.	Units
$R_{\theta JC}$	Junction-to-Case	——	1.2	°C/W
$R_{\theta CS}$	Case-to-Sink, Flat, Greased Surface	0.24	——	
$R_{\theta JA}$	Junction-to-Ambient, typical socket mount	——	40	
Wt	Weight	6 (0.21)	——	g (oz)

4/15/2000

找PDF 维库一下 pdf.dzsc.com

Electrical Characteristics @ T_J = 25°C (unless otherwise specified)

	Parameter	Min.	Typ.	Max.	Units	Conditions
$V_{(BR)CES}$	Collector-to-Emitter Breakdown Voltage	600	—	—	V	V_{GE} = 0V, I_C = 250µA
$V_{(BR)ECS}$	Emitter-to-Collector Breakdown Voltage ④	18	—	—	V	V_{GE} = 0V, I_C = 1.0A
$\Delta V_{(BR)CES}/\Delta T_J$	Temperature Coeff. of Breakdown Voltage	—	0.75	—	V/°C	V_{GE} = 0V, I_C = 1.0mA
$V_{CE(ON)}$	Collector-to-Emitter Saturation Voltage	—	1.40	1.6	V	I_C = 18A V_{GE} = 15V
		—	1.84	—		I_C = 34A See Fig.2, 5
		—	1.45	—		I_C = 18A , T_J = 150°C
$V_{GE(th)}$	Gate Threshold Voltage	3.0	—	6.0		V_{CE} = V_{GE}, I_C = 250µA
$\Delta V_{GE(th)}/\Delta T_J$	Temperature Coeff. of Threshold Voltage	—	-11	—	mV/°C	V_{CE} = V_{GE}, I_C = 250µA
g_{fe}	Forward Transconductance ⑤	6.0	11	—	S	V_{CE} = 100V, I_C = 18A
I_{CES}	Zero Gate Voltage Collector Current	—	—	250	µA	V_{GE} = 0V, V_{CE} = 600V
		—	—	2.0		V_{GE} = 0V, V_{CE} = 10V, T_J = 25°C
		—	—	1000		V_{GE} = 0V, V_{CE} = 600V, T_J = 150°C
I_{GES}	Gate-to-Emitter Leakage Current	—	—	±100	nA	V_{GE} = ±20V

Switching Characteristics @ T_J = 25°C (unless otherwise specified)

	Parameter	Min.	Typ.	Max.	Units	Conditions
Q_g	Total Gate Charge (turn-on)	—	50	75	nC	I_C = 18A
Q_{ge}	Gate - Emitter Charge (turn-on)	—	7.3	11		V_{CC} = 400V See Fig. 8
Q_{gc}	Gate - Collector Charge (turn-on)	—	17	26		V_{GE} = 15V
$t_{d(on)}$	Turn-On Delay Time	—	22	—	ns	
t_r	Rise Time	—	18	—		T_J = 25°C
$t_{d(off)}$	Turn-Off Delay Time	—	540	810		I_C = 18A, V_{CC} = 480V
t_f	Fall Time	—	390	590		V_{GE} = 15V, R_G = 23Ω
E_{on}	Turn-On Switching Loss	—	0.26	—	mJ	Energy losses include "tail"
E_{off}	Turn-Off Switching Loss	—	3.45	—		See Fig. 9, 10, 14
E_{ts}	Total Switching Loss	—	3.71	5.6		
$t_{d(on)}$	Turn-On Delay Time	—	21	—	ns	T_J = 150°C,
t_r	Rise Time	—	19	—		I_C = 18A, V_{CC} = 480V
$t_{d(off)}$	Turn-Off Delay Time	—	790	—		V_{GE} = 15V, R_G = 23Ω
t_f	Fall Time	—	760	—		Energy losses include "tail"
E_{ts}	Total Switching Loss	—	6.55	—	mJ	See Fig. 11, 14
L_E	Internal Emitter Inductance	—	13	—	nH	Measured 5mm from package
C_{ies}	Input Capacitance	—	1100	—	pF	V_{GE} = 0V
C_{oes}	Output Capacitance	—	72	—		V_{CC} = 30V See Fig. 7
C_{res}	Reverse Transfer Capacitance	—	13	—		f = 1.0MHz

Notes:

① Repetitive rating; V_{GE} = 20V, pulse width limited by max. junction temperature. (See fig. 13b)

② V_{CC} = 80%(V_{CES}), V_{GE} = 20V, L = 10µH, R_G = 23Ω, (See fig. 13a)

③ Repetitive rating; pulse width limited by maximum junction temperature.

④ Pulse width ≤ 80µs; duty factor ≤ 0.1%.

⑤ Pulse width 5.0µs, single shot.

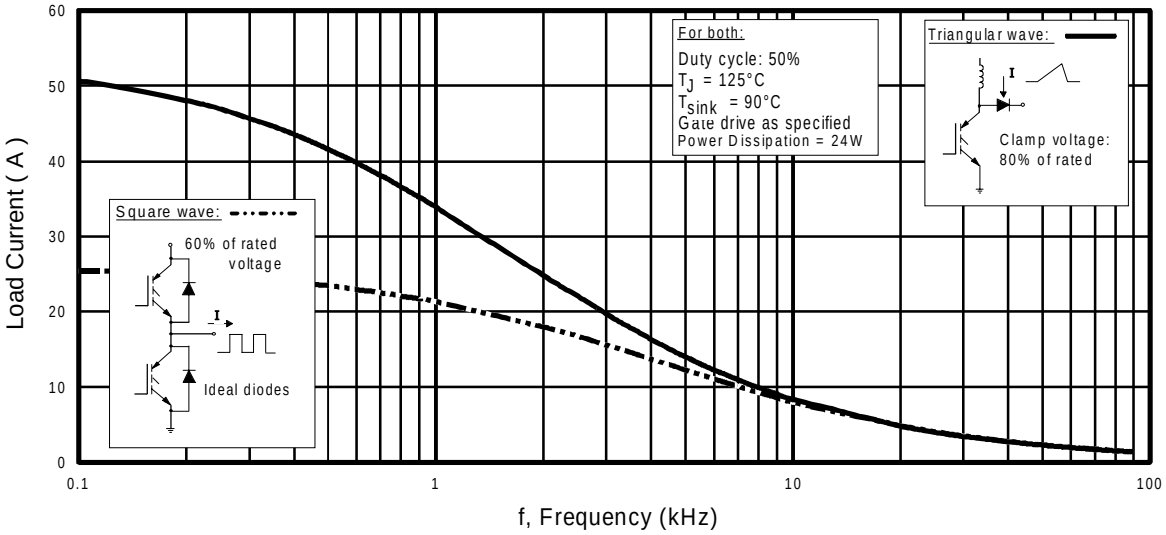

Fig. 1 - Typical Load Current vs. Frequency
(Load Current = I_{RMS} of fundamental)

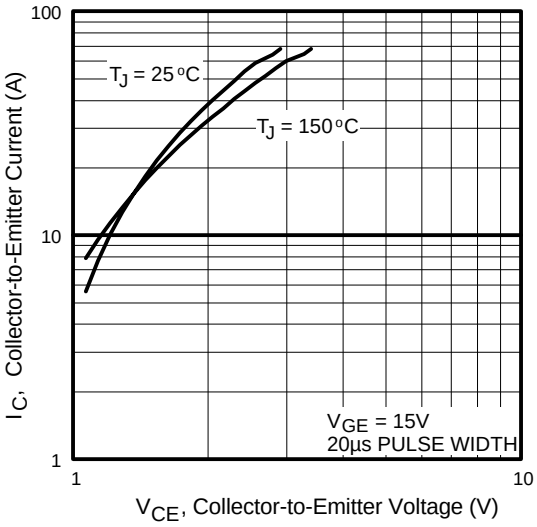

Fig. 2 - Typical Output Characteristics

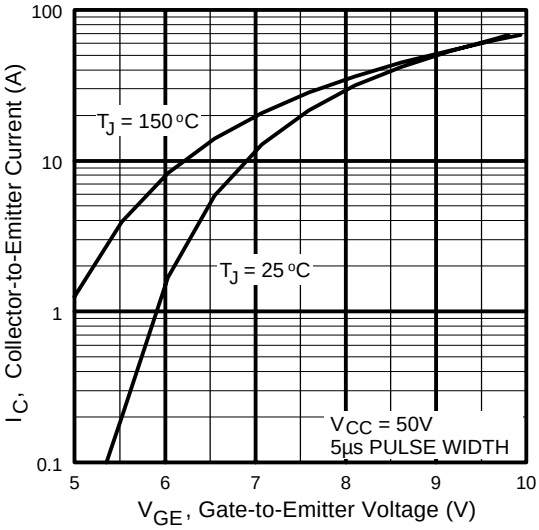

Fig. 3 - Typical Transfer Characteristics

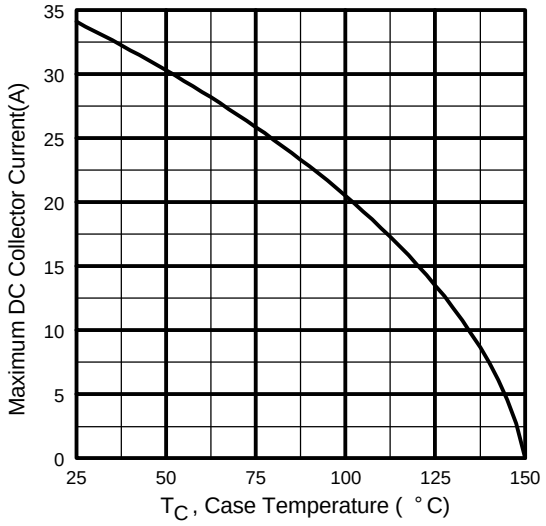

Fig. 4 - Maximum Collector Current vs. Case Temperature

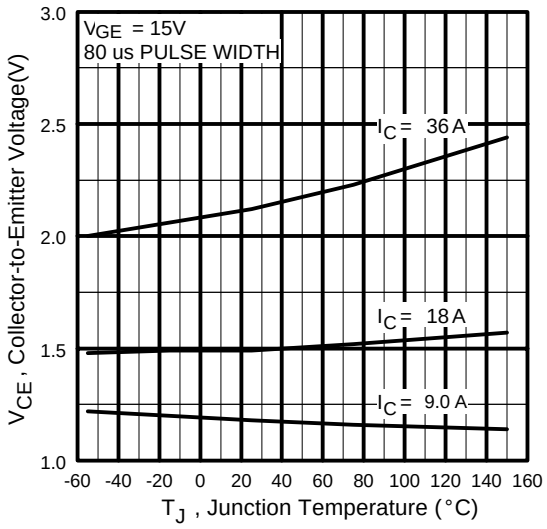

Fig. 5 - Typical Collector-to-Emitter Voltage vs. Junction Temperature

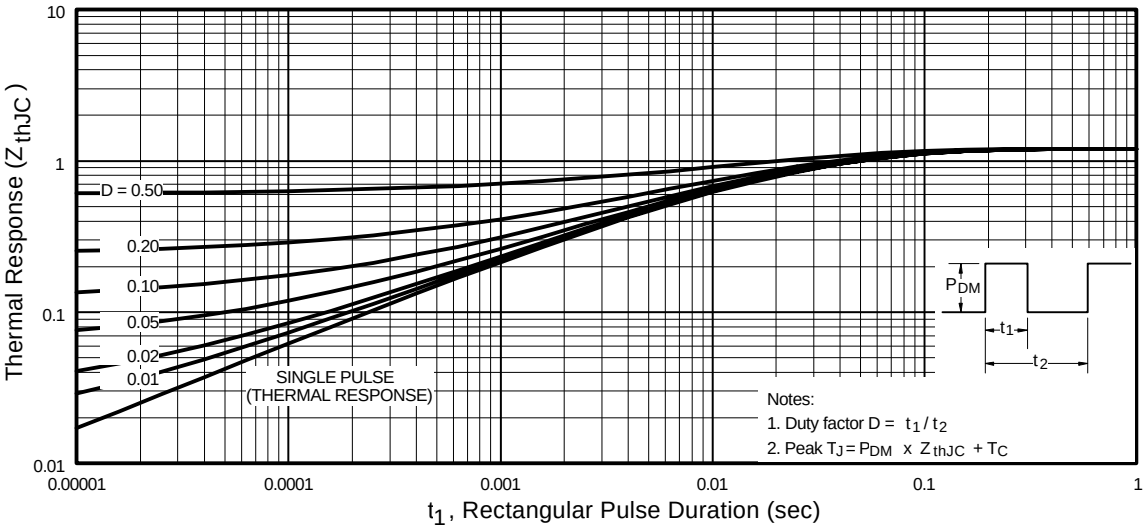

Fig. 6 - Maximum Effective Transient Thermal Impedance, Junction-to-Case

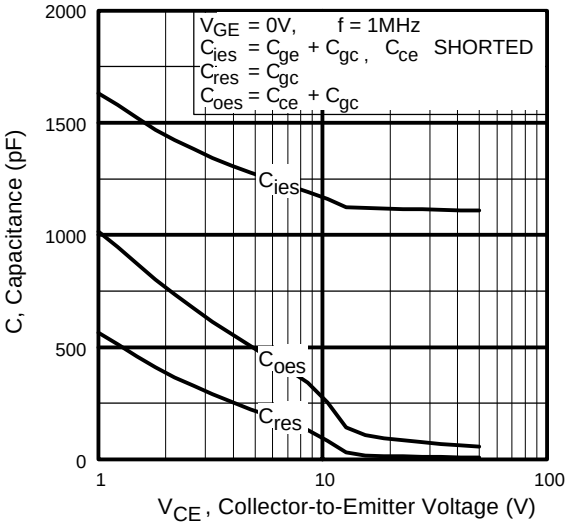

Fig. 7 - Typical Capacitance vs. Collector-to-Emitter Voltage

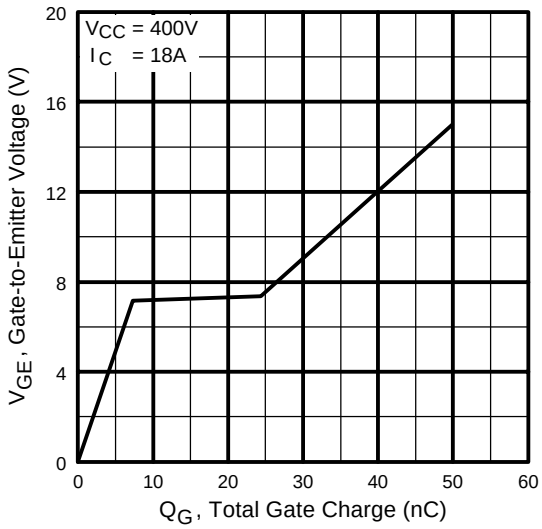

Fig. 8 - Typical Gate Charge vs. Gate-to-Emitter Voltage

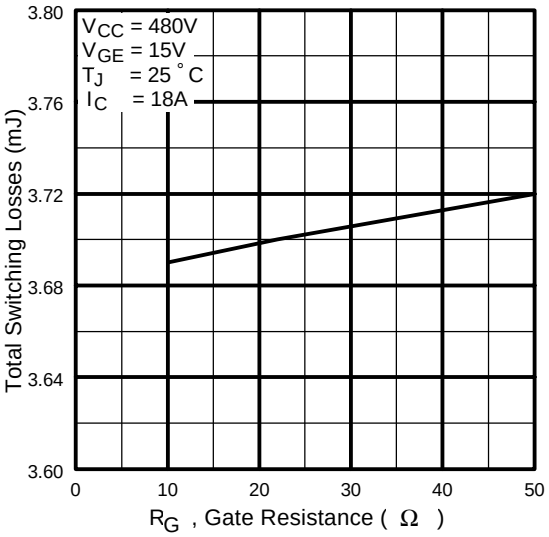

Fig. 9 - Typical Switching Losses vs. Gate Resistance

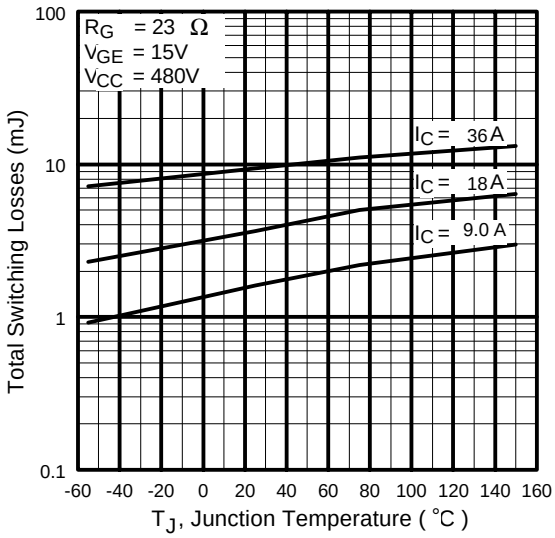

Fig. 10 - Typical Switching Losses vs. Junction Temperature

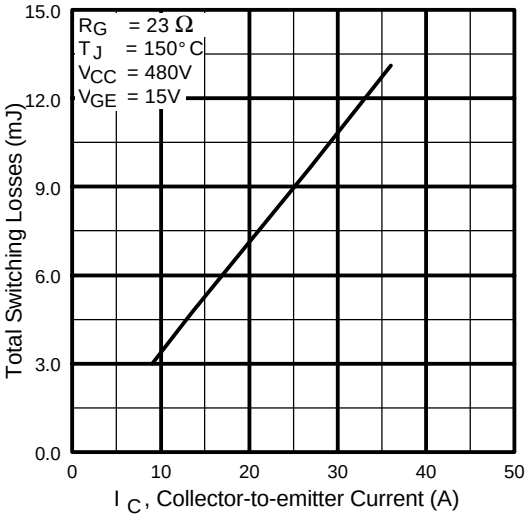

Fig. 11 - Typical Switching Losses vs. Collector-to-Emitter Current

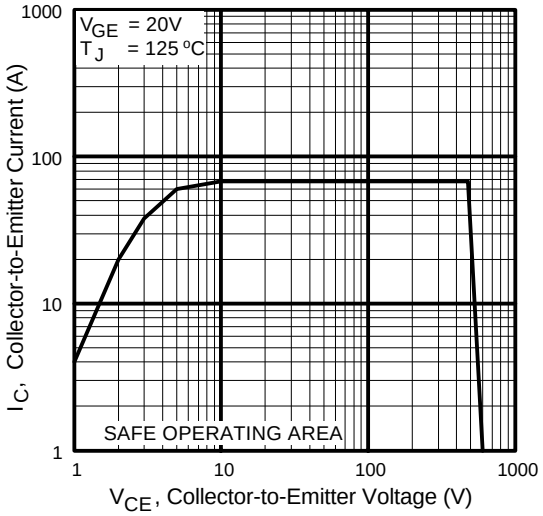

Fig. 12 - Turn-Off SOA

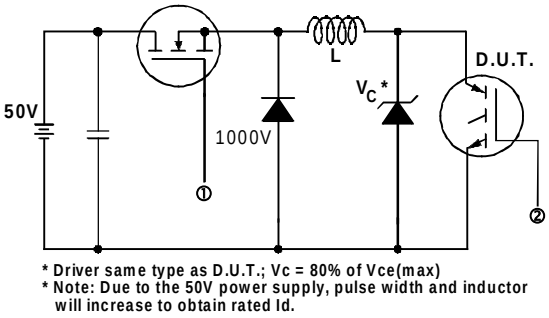

Fig. 13a - Clamped Inductive Load Test Circuit

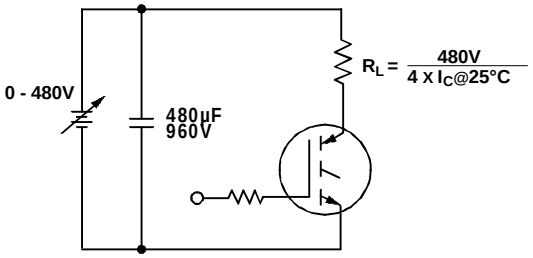

Fig. 13b - Pulsed Collector Current Test Circuit

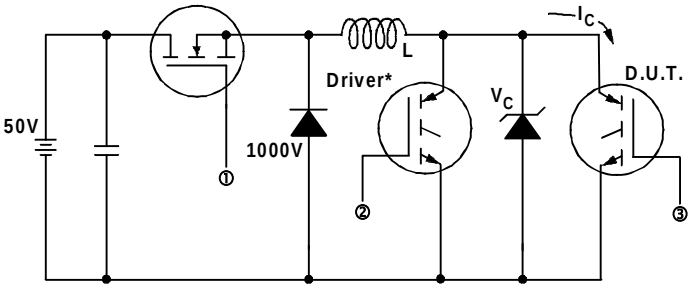

Fig. 14a - Switching Loss Test Circuit

*** Driver same type as D.U.T., VC = 480V**

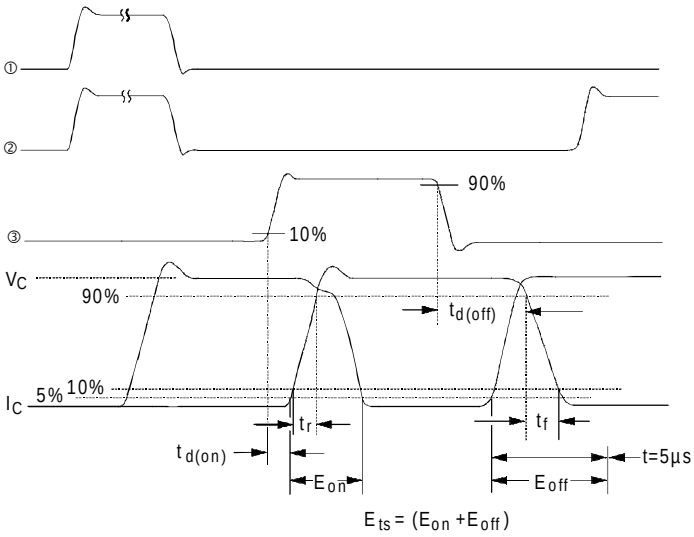

Fig. 14b - Switching Loss Waveforms

Case Outline and Dimensions — TO-247AC

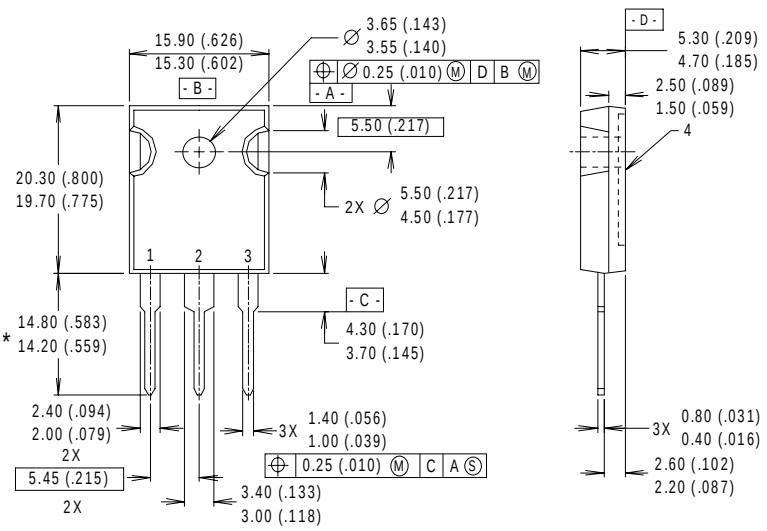

NOTES:
1 DIMENSIONS & TOLERANCING PER ANSI Y14.5M, 1982.
2 CONTROLLING DIMENSION : INCH.
3 DIMENSIONS ARE SHOWN MILLIMETERS (INCHES).
4 CONFORMS TO JEDEC OUTLINE TO-247AC.

LEAD ASSIGNMENTS
1 - GATE
2 - COLLECTOR
3 - EMITTER
4 - COLLECTOR

* LONGER LEADED (20mm) VERSION AVAILABLE (TO-247AD) TO ORDER ADD "-E" SUFFIX TO PART NUMBER

CONFORMS TO JEDEC OUTLINE TO-247AC (TO-3P)
Dimensions in Millimeters and (Inches)

International
IOR Rectifier

IR WORLD HEADQUARTERS: 233 Kansas St., El Segundo, California 90245, USA Tel: (310) 252-7105
IR EUROPEAN REGIONAL CENTRE: 439/445 Godstone Rd, Whyteleafe, Surrey CR3 OBL, UK Tel: ++ 44 (0)20 8645 8000
IR CANADA: 15 Lincoln Court, Brampton, Ontario L6T3Z2, Tel: (905) 453 2200
IR GERMANY: Saalburgstrasse 157, 61350 Bad Homburg Tel: ++ 49 (0) 6172 96590
IR ITALY: Via Liguria 49, 10071 Borgaro, Torino Tel: ++ 39 011 451 0111
IR JAPAN: K&H Bldg., 2F, 30-4 Nishi-Ikebukuro 3-Chome, Toshima-Ku, Tokyo 171 Tel: 81 (0)3 3983 0086
IR SOUTHEAST ASIA: 1 Kim Seng Promenade, Great World City West Tower, 13-11, Singapore 237994 Tel: ++ 65 (0)838 4630
IR TAIWAN:16 Fl. Suite D. 207, Sec. 2, Tun Haw South Road, Taipei, 10673 Tel: 886-(0)2 2377 9936
Data and specifications subject to change without notice. 4/00