查询GS1085供应商 捷多邦，专业PCB打样工厂，24小时加急出货

New Product

Vishay
formerly General Semiconductor

3A Low Dropout Positive Adjustable Regulator

TO-252 (DPak)

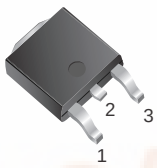

GS1085CE

TO-220AB

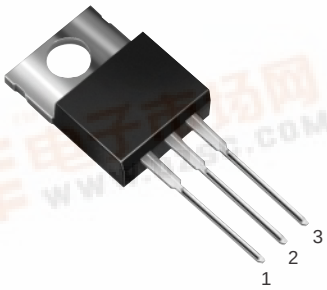

GS1085CT

TO-263AB (D^2Pak)

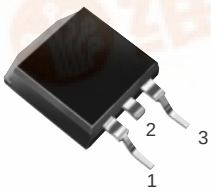

GS1085CM

Pin Definition

1. Adjust/Gnd.
2. V_{out} (tab)
3. V_{in}

Features

- Dropout Voltage 1.3V at 3A Output Current
- Fast Transient Response
- Line Regulation typically at 0.015%
- Load Regulation typically at 0.1%
- Internal thermal and current limiting
- Adjustable Output Voltage or Fixed 1.8V, 2.5V, 3.3V
- Standard 3-Pin Power Packages

Functional Block Diagram

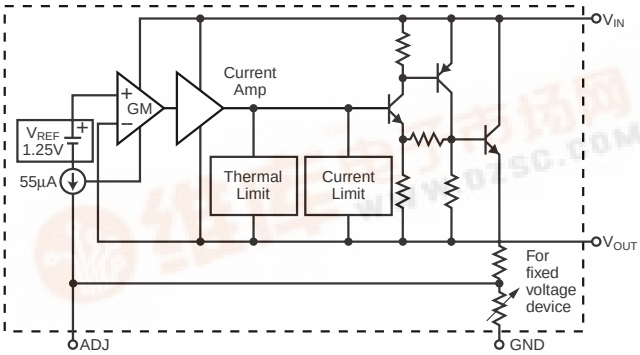

Description

The GS1085 is a low dropout three terminal regulator with 3A output current capability. The output voltage is adjustable with the use of a resistor divider. For fixed output voltage versions, the output voltage is internally set at 1.8V, 2.5V, or 3.3V. Dropout is guaranteed at a maximum of 1.4V at maximum output current. Its low dropout voltage and fast transient response make it ideal for low voltage microprocessor applications. Internal current and thermal limiting provides protection against any overload condition that would create excessive junction temperatures.

Applications

- Post Regulator for Switching Supply
- Microprocessor Power Supplies
- Constant-Current Regulators
- Motherboard I/O Power Supplies

Mechanical Data

Case: TO-220AB, TO-263AB (D^2PAK), TO-252 (DPAK)

High temperature soldering guaranteed:

260°C/10 seconds at terminals

Case outlines are on the back page

找PDF 维库一下 pdf.dzsc.com

Maximum Ratings and Thermal Characteristics (T_A = 25°C unless otherwise noted)

Parameter	Symbol	Value	Unit
Vin Pin to ADJ/GND Pin	Vin	7	V
Thermal Resistance – Junction to Case TO-220AB TO-252 TO-263AB	$R_{\theta JC}$	 3.0 8.0 3.0	°C/W
Operating Junction Temperature Range	T_J	0 to +125	°C
Storage Temperature Range	T_{stg}	–65 to 150	°C

Electrical Characteristics[1] T_J = 25°C[2], V_{IN} = 5V, I_o = 10mA unless otherwise noted.

Parameter	Symbol	Test Conditions	Min	Typ	Max	Unit
Reference Voltage	V_{REF}	T_J = 25°C 0°C ≤ T_J ≤ 125°C 2.65V ≤ V_{IN} ≤ 7V 10mA ≤ I_o ≤ 3A	1.238 1.225	1.250 1.250	1.262 1.275	V
Output Voltage	V_{OUT}	GS1085-1.8 V_{IN} = 5V GS1085-2.5 V_{IN} = 5V GS1085-3.3 V_{IN} = 7V GS1085 0°C ≤ T_J ≤ 125°C 2.65V ≤ V_{IN} ≤ 5V 10mA ≤ I_o ≤ 3A	1.78 2.47 3.26 0.98V_N	1.8 2.5 3.3 V_N	1.82 2.53 3.33 1.02V_N	V
Line Regulation	REG_{line}	2.65V ≤ V_{IN} ≤ 7V T_J = 25°C 0°C ≤ T_J ≤ 125°C		0.015 0.035	0.2 0.2	% V_O
Load Regulation	REG_{load}	10mA ≤ I_o ≤ 3A T_J = 25°C 0°C ≤ T_J ≤ 125°C		0.1 0.2	0.3 0.4	% V_O
Dropout Voltage	V_{DROP}	0°C ≤ T_J ≤ 125°C I_o = 3A I_o = 2A I_o = 1A		1.3 1.28 1.25	1.4 1.37 1.34	V
Output Current	I_o	0°C ≤ T_J ≤ 125°C	3.0	4.0	–	A
Adjust Pin Current	I_{adj}	2.65 ≤ Vin ≤ 7V 10mA ≤ I_o ≤ 3A 0°C ≤ T_J ≤ 125°C	–	55	120	µA
Adjust Pin Current Change	ΔI_{adj}	2.65 ≤ Vin ≤ 7V 10mA ≤ I_o ≤ 3A 0°C ≤ T_J ≤ 125°C	–	0.2	5	µA
Temperature Stability	T_S	I_o = 0.5A 0°C ≤ T_J ≤ 125°C	–	0.5	–	%V_O
Minimum Load Current Adjustable Version	I_{LMIN}	0°C ≤ T_J ≤ 125°C	–	5	10	mA

Electrical Characteristics (con't.)(1) T_J = 25°C (2), V_{IN} = 5V, I_o = 10mA unless otherwise noted.

Parameter	Symbol	Test Conditions	Min	Typ	Max	Unit
Quiescent Current Fixed Voltage Version	I_Q	0°C ≤ T_J ≤ 125°C	–	10	14	mA
RMS Output Noise	N	10Hz ≤ f ≤ 10 kHz	–	0.003	–	%V_O
Ripple Rejection Ratio	RR	f = 120 Hz, C_O = 25µF C_{adj} = 25µF	60	68	–	dB
Thermal Regulation	R_{TH}	T_A = 25°C, 30ms Pulse	–	0.02	0.05	%/W
Long Term Stability		T_A = 125°C, 1000 Hrs	–	0.3	–	%V_O

Notes:
(1) All parameters, except nominal output voltage are specified for the variable voltage version, allowing a wider V_{in} Range.
The specified limits also apply for the fixed voltage versions over the allowable input voltage range: GS1085-1.8 (3.2V - 7.0V), GS1085-2.5 (3.9V - 7.0V), GS1085-3.3 (4.75V - 7.0V).
(2) To maintain the specified junction temperatures, low duty cycle pulse testing is required for most parameters.

Typical Application Circuit

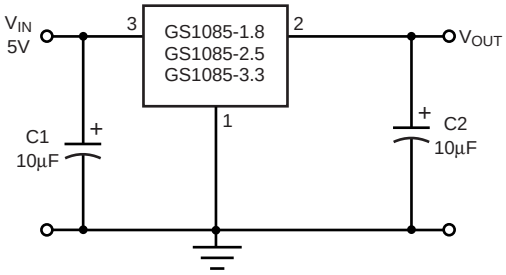

Fixed Voltage Regulator

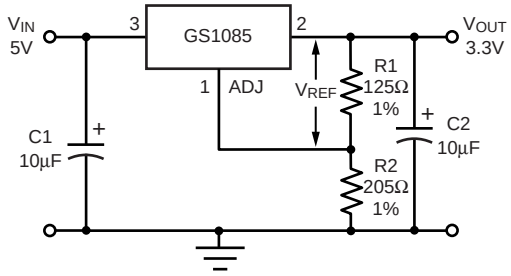

Adjustable Voltage Regulator

Notes:
V_{REF} = V_{OUT} – V_{ADJ} = 1.25V (typ.)
V_{OUT} = V_{REF} x (1+R2/R1) + I_{ADJ} x R2
I_{ADJ} = 55µA (typ.)
(1) C1 needed if device is far away from filter capacitors
(2) C2 required for stability

Ratings and Characteristic Curves (T_A = 25°C unless otherwise noted)

Fig. 1 – Dropout Voltage vs. Output Current

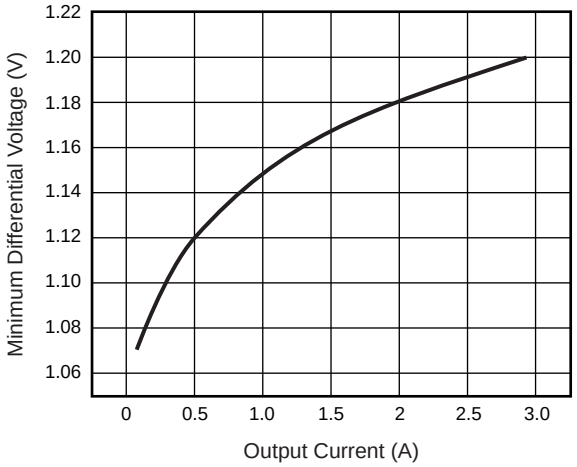

Fig. 2 – Load Regulation vs. Temperature

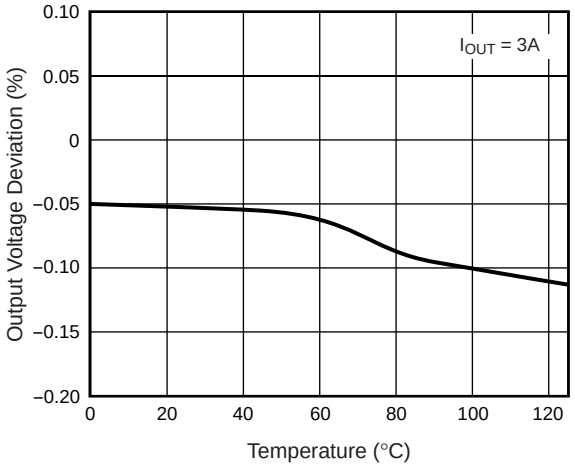

Fig. 3 – Minimum Load Current (Adjustable Version)

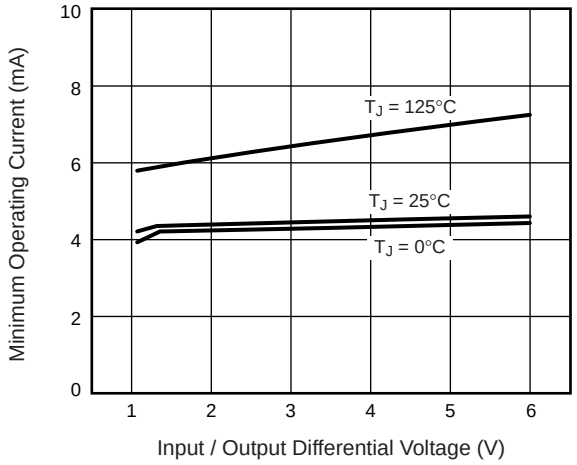

Fig. 4 – Adjust Pin Current

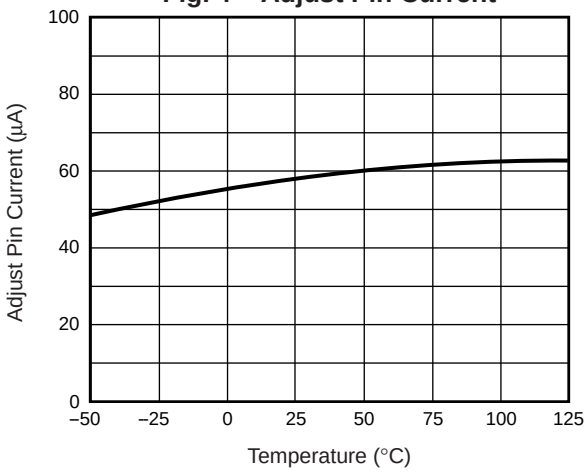

Fig. 5 – Temperature Stability

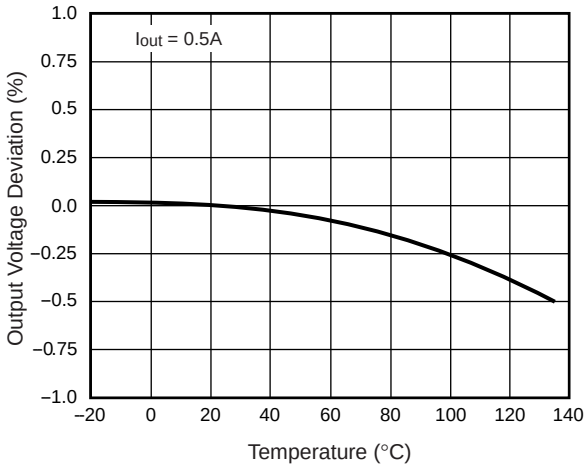

Fig. 6 – Ripple Rejection (with C_{adj} 25µF)

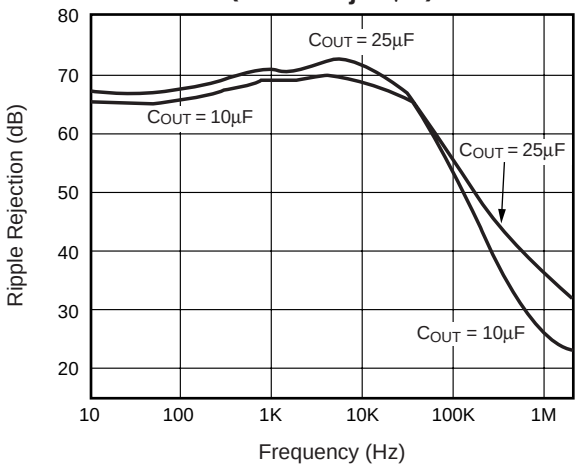

Ratings and Characteristic Curves (TA = 25°C unless otherwise noted)

Fig. 7 – Load Transient Response

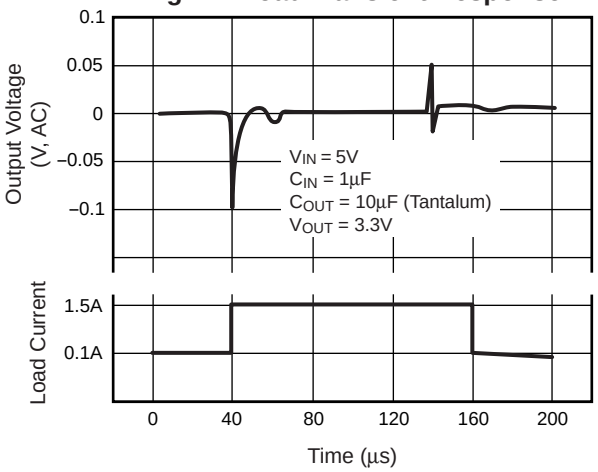

Fig. 8 – Line Transient Response

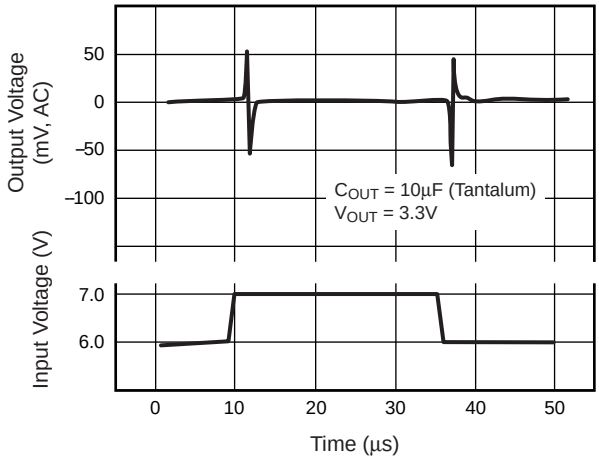

Ordering Information

GS1085Cxx xxx

Output Voltage
Default: Adj.
1.8: 1.8V
2.5: 2.5V
3.3: 3.3V

Package Type
T: TO-220
M: TO-263
E: TO-252

Case Outlines

TO-252 (DPAK)

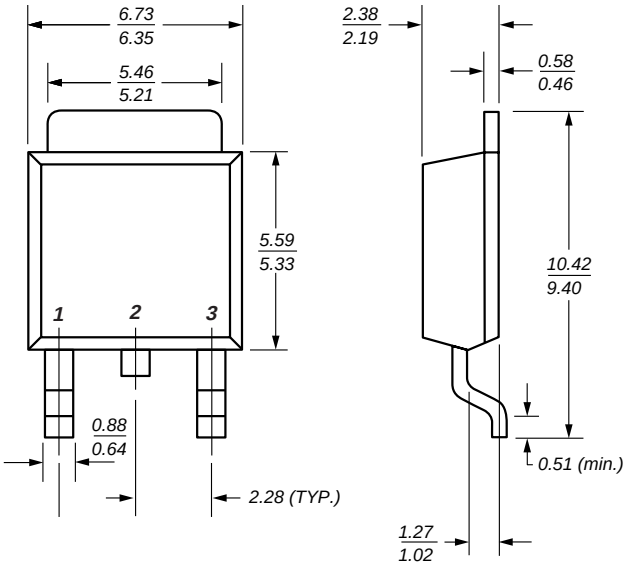

TO-220

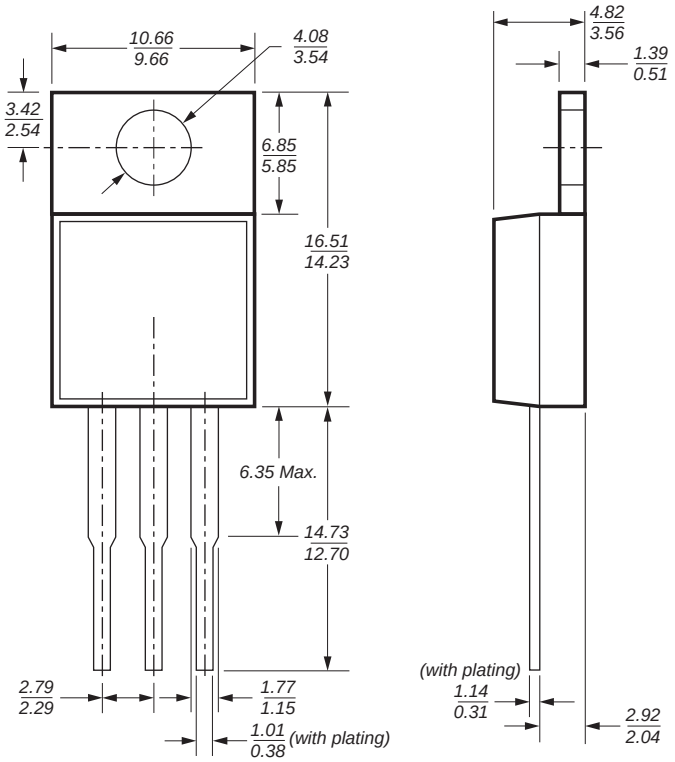

TO-263

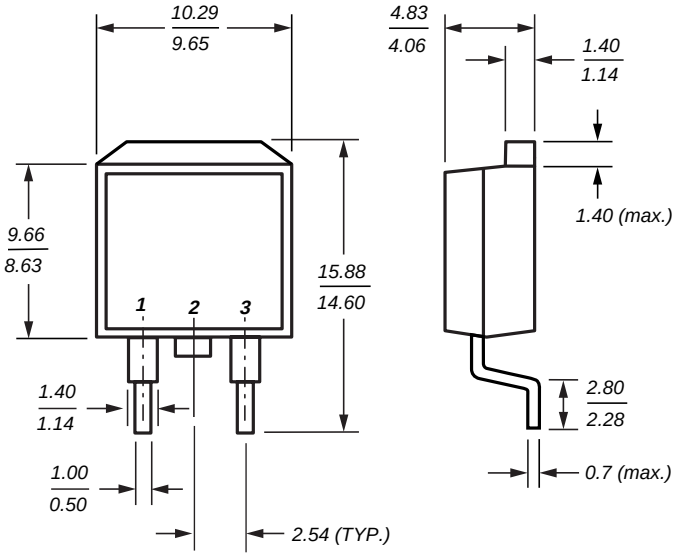

Dimensions in millimeters