查询GS1T70-D540供应商 捷多邦，专业PCB打样工厂，24小时加急出货

SGS-THOMSON MICROELECTRONICS

GS1T70-D540/2

ISDN DC-DC CONVERTER

PRELIMINARY DATA

Type	V_i	V_o	I_o
GS1T70-D540/2	28 to 115 V	out 1 : 5V	72 mA
		out 2 : 40V	12 mA

FEATURES

- Wide operating line termination voltage
- Positive or negative input voltage polarity
- Input and output filtering
- Short-circuit protection on both outputs
- Input power during shortcircuit within specification
- Minimum current drain during stand-by condition: 10µA for Vi<18V
- Input-Output2 insulation voltage: 3000V_{RMS} for 60 seconds
- Output1-Output2 insulation voltage: 3000V_{RMS} for 60 seconds
- Mechanical dimensions (L x W x H): 50.8 mm x 50.8 mm x 18 mm (2" x 2" x 0.71")

DESCRIPTION

The GS1T70-D540/2 converter has been designed for the “U” interface of an ISDN-NTBA (Network Termination Basic Access) system with either 4B3T or 2B1Q standard trasmission.

Two outputs, 5V/72mA and 40V/12mA are supplied.
The converter offers short-circuit protection (short-circuit on 40V output doesn’t affect 5V output and the input power never exceeds the limits of the specification), input either voltage polarity, 80% minimum efficiency at maximum load, input and output filtering to meet very stringent noise requirements.

When the input voltage is below 18V, the converter offers a very high input impedance and a maximum quiescent current of 10µA according to the standard ETR 080.

In addition, the wide operating input voltage range allows it to operate within the whole range of LT (Line Termination) battery voltage and its relevant line resistance.
3000V_{RMS} isolation voltage for 60 second is provided between input to output 2 and between output 1 and output 2. No insulation is provided between input and output 1.

The design of the module has been conducted using, as reference standards, the following:

EN 60950, VDE0878 part 1 class B (EMC), EN55022 class B (EMC), CCITT 430, ETS 300 012 and ETS 300 047 (ISDN BASIC ACCESS, Safety and Protection); anyway, please note that no certification processes have been carried out on the module itself.

找PDF 维库一下 pdf.dzsc.com

ELECTRICAL CHARACTERISTICS (T_{amb} = 25°C unless otherwise specified)

Std. Conditions:

Line Termination voltage: 47 to 71V
87 to 115V

Line Resistance (Rs): 0 to 600 Ω
550 to 1400 Ω

Symbol	Parameter	Test Conditions	Min	Typ	Max	Unit
V_i	Input Voltage	Std. Conditions	28		115	V
V_{ist}	Start Up Input Voltage	See fig. 3	28		44	V
V_{o1}	Output Voltage 1	Std. Conditions	4.75	5	5.25	V
V_{o2}	Output Voltage 2	Std. Conditions	34	40	42	V
V_{or1}	Output Ripple Voltage 1	Std. Conditions BW = 0 to 20MHz		5	20	mVpp
V_{or2}	Output Ripple Voltage 2	Std. Conditions BW = 0 to 20MHz		10	30	mVpp
I_{o1}	Output Current 1	Std. Conditions P_{o2} = 410 mW V_{o1} = 5V	2		72	mA
P_{o2}	Output Power 2	Std. Conditions Vo1 = 4.75 to 5.25V Vo2 = 34 to 42 V	0		420	mW
I_{o2max}	Max Output Current 2	Std. Conditions Io1 = 2 to 72 mA V_{o2} = 34 to 40V	12			mA
I_{osc2}	Output 2 Short Circuit Current	Std. Conditions Output Shorted (Indefinite time)	9.8			mA
V_{is}	Insulation Voltage	Input to Output 2 Output 1 to Output 2 (*) f = 50 Hz	3000			VRMS
MTBF	Mean Time Before Failure	Ground Fixed	1			Mhours
T_{op}	Operating Ambient Temperature Range		-20		+70	°C
T_{stg}	Storage Temperature Range		- 40		+85	°C

(*) no insulation is provided between input and output 1

OUTPUT POWER CHARACTERISTICS

LT (Line Termination Voltage) = **47V to 71V** **Rs** (Line Resistance) = 0 to 600 Ω				**LT** (Line Termination Voltage) = **87V to 99V** **Rs** (Line Resistance) = 550 to 1400 Ω			
Max Input Power (mW)	**NT Status**	**Min Output Power 1 (5V)[mW]**	**Min Output Power 2 (40V)[mW]**	**Max Input Power (mW)**	**NT Status**	**Min Output Power 1 (5V)[mW]**	**Min Output Power 2 (40V)[mW]**
450	Activated	320	0	450	Activated	320	0
950 (*)	Activated Emergency	320	410	950	Activated Emergency	320	410
90	Deactivated	40	0	90	Deactivated	40	0
180	Deactivated Emergency	40	45	180	Deactivated Emergency	40	45
1050 (*)	Activated with 40 V Short circuit	320	Short circuit	1050	Activated with 40V Short circuit	320	Short circuit

N.B.: with the following output loads:

P_o1 (5V) : 15 mW and **P_o2 (40 V) : 410 mW ,** maintained for a time **t ≥ 2s, V_o2 = 34 to 42 V**

(*) Note: the values indicated are subordinated to the available input power

Figure 1. Connection diagram and mechanical data

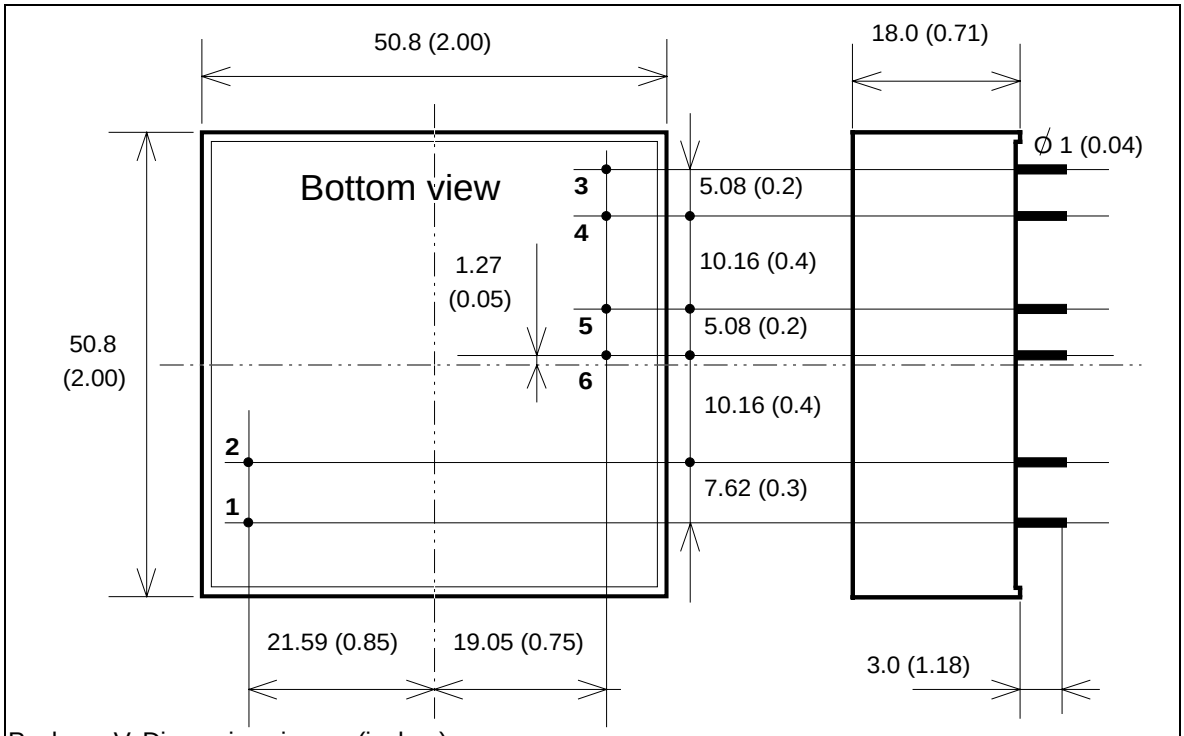

Package V. Dimensions in mm (inches).

PIN DESCRIPTION

Pin	Description
1	Input (either polarity)
2	Input (either polarity)
3	+5V Output
4	Return for +5V Output
5	+40V Output
6	Return for +40 V Output

GALVANIC INSULATION

Galvanic insulation (3000 V for 60 s as specified in EN60950) is provided between the input and the output 1 (40 V output for the "S" interface).
No insulation is provided between input and output 2 (+5 V for logics put on NT1 board). See figure 2.

Figure 2. Galvanic insulation barrier

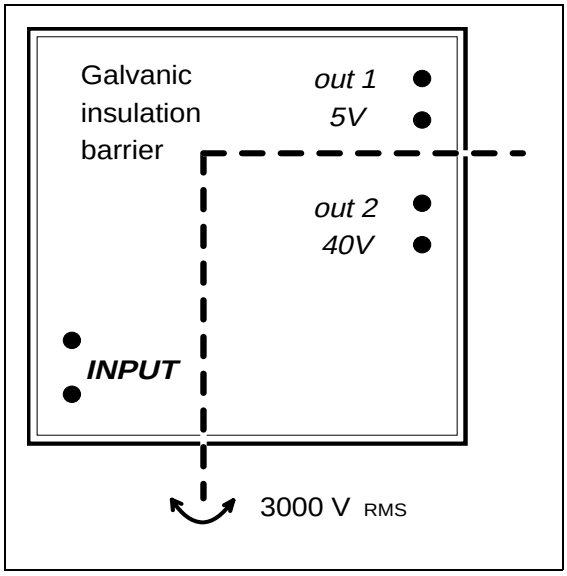

Figure 3. Voltage Supply operating area

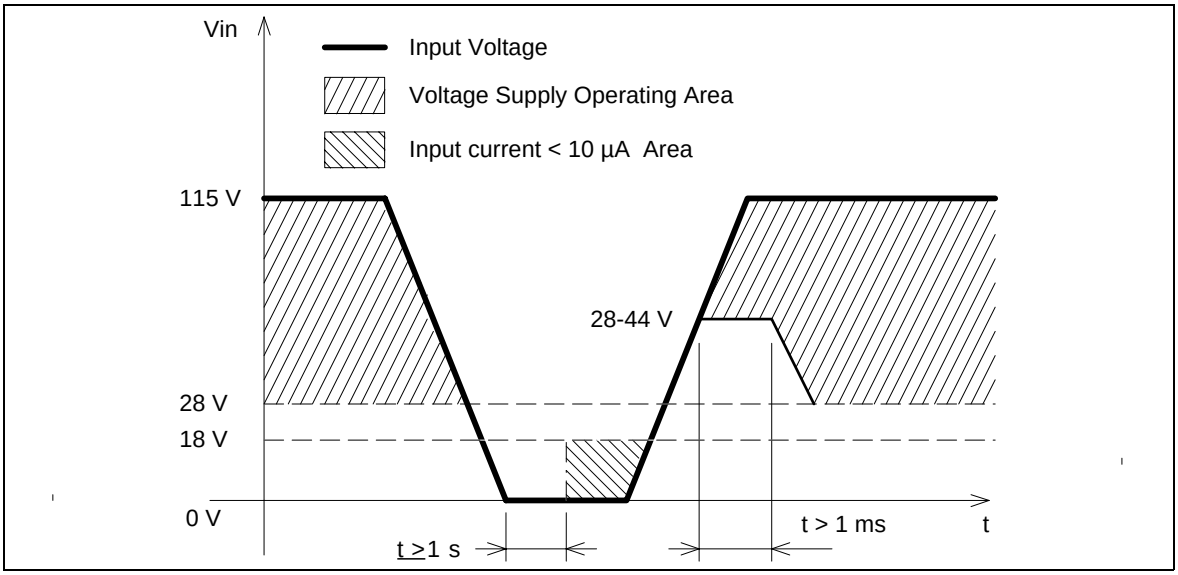

VOLTAGE SUPPLY OPERATING AREA

Figure 3 shows the Voltage Supply Operating area during a switching OFF-ON sequence.The start-up voltage is 44V maximum.

One second after U-interface disconnection, and if the input voltage remains below 18V, the maximum quiescent input current value remains below than 10µA.

Figure 4. Typical application example

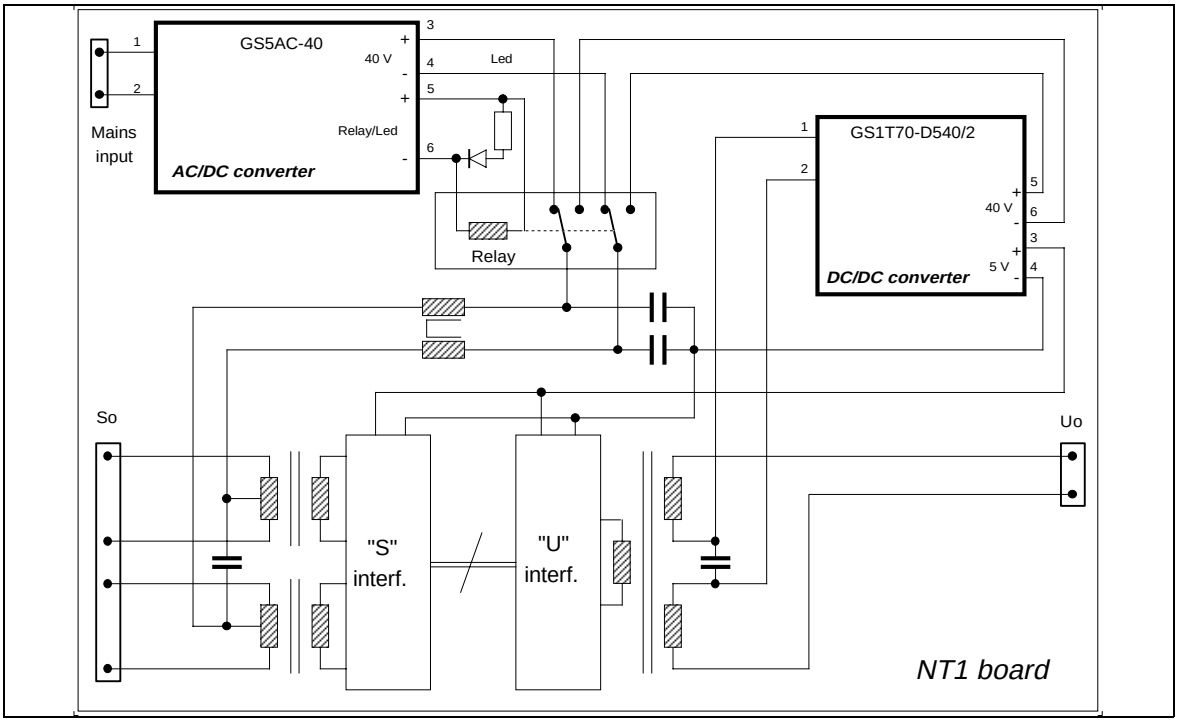

Information furnished is believed to be accurate and reliable. However, SGS-THOMSON Microelectronics assumes no responsibility for the consequences of use of such information nor for any infringement of patents or other rights of third parties which may result from its use. No license is granted by implication or otherwise under any patent or patent rights of SGS-THOMSON Microelectronics. Specification mentioned in this publication are subject to change without notice. This publication supersedes and replaces all information previously supplied. SGS-THOMSON Microelectronics products are not authorized for use as critical components in life support devices or systems without express written approval of SGS-THOMSON Microelectronics.

© 1997 SGS-THOMSON Microelectronics – All Rights Reserved

SGS-THOMSON Microelectronics GROUP OF COMPANIES
Australia - Brazil - China - Canada - France - Germany - Hong Kong - Italy - Japan - Korea - Malaysia - Malta - Morocco - The Netherlands - Singapore - Spain - Sweden - Switzerland - Taiwan - Thailand - United Kingdom - U.S.A.