查询MCH3302供应商 捷多邦，专业PCB打样工厂，24小时加急出货

Ordering number:ENN6369

P-Channel Silicon MOSFET

MCH3302

Ultrahigh-Speed Switching Applications

Features

- Low ON resistance.
- Ultrahigh-speed swithcing.
- 4V drive.

Package Dimensions

unit:mm

2167

[MCH3302]

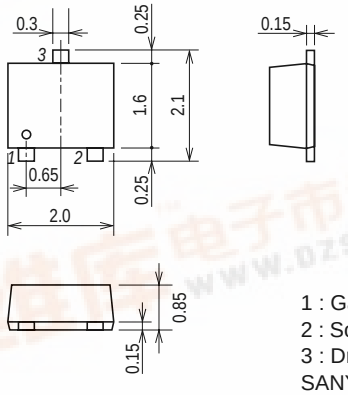

1 : Gate
2 : Source
3 : Drain
SANYO : MCPH3

Specifications

Absolute Maximum Ratings at Ta = 25˚C

Parameter	Symbol	Conditions	Ratings	Unit
Drain-to-Source Voltage	V_{DSS}		–30	V
Gate-to-Source Voltage	V_{GSS}		±20	V
Drain Current (DC)	I_D		–1	A
Drain Current (pulse)	I_{DP}	PW≤10μs, duty cycle≤1%	–4	A
Allowable Power Dissipation	P_D	Mounted on a ceramic board (900mm²×0.8mm)	1	W
Channel Temperature	Tch		150	˚C
Storage Temperature	Tstg		–55 to +150	˚C

Electrical Characteristics at Ta = 25˚C

Parameter	Symbol	Conditions	Ratings			Unit
			min	typ	max	
Drain-to-Source Breakdown Voltage	$V_{(BR)DSS}$	I_D=–1mA, V_{GS}=0	–30			V
Zero-Gate Voltage Drain Current	I_{DSS}	V_{DS}=–30V, V_{GS}=0			–10	μA
Gate-to-Source Leakage Current	I_{GSS}	V_{GS}=±16V, V_{DS}=0			±10	μA
Cutoff Voltage	V_{GS}(off)	V_{DS}=–10V, I_D=–1mA	–1.0		–2.5	V
Forward Transfer Admittance	| yfs |	V_{DS}=–10V, I_D=–500mA	670	950		mS
Static Drain-to-Source On-State Resistance	R_{DS}(on)1	I_D=–500mA, V_{GS}=–10V		350	460	mΩ
	R_{DS}(on)2	I_D=–300mA, V_{GS}=–4V		680	950	mΩ
Input Capacitance	Ciss	V_{DS}=–10V, f=1MHz		90		pF
Output Capacitance	Coss	V_{DS}=–10V, f=1MHz		50		pF
Reverse Transfer Capacitance	Crss	V_{DS}=–10V, f=1MHz		20		pF

Marking : JB

Continued on next page.

■ Any and all SANYO products described or contained herein do not have specifications that can handle applications that require extremely high levels of reliability, such as life-support systems, aircraft's control systems, or other applications whose failure can be reasonably expected to result in serious physical and/or material damage. Consult with your SANYO representative nearest you before using any SANYO products described or contained herein in such applications.

■ SANYO assumes no responsibility for equipment failures that result from using products at values that exceed, even momentarily, rated values (such as maximum ratings, operating condition ranges,or other parameters) listed in products specifications of any and all SANYO products described or contained herein.

SANYO Electric Co.,Ltd. Semiconductor Company
TOKYO OFFICE Tokyo Bldg., 1-10, 1 Chome, Ueno, Taito-ku, TOKYO, 110-8534 JAPAN

找PDF 维库一下 pdf.dzsc.com

Continued from preceding page.

Parameter	Symbol	Conditions	Ratings			Unit
			min	typ	max	
Turn-ON Delay Time	t_d(on)	See specified Test Circuit		6		ns
Rise Time	t_r	See specified Test Circuit		9.5		ns
Turn-OFF Delay Time	t_d(off)	See specified Test Circuit		20		ns
Fall Time	t_f	See specified Test Circuit		16		ns
Total Gate Charge	Qg	V_{DS}=–10V, V_{GS}=–10V, I_D=–1A		4		nC
Gate-to-Source Charge	Qgs	V_{DS}=–10V, V_{GS}=–10V, I_D=–1A		1		nC
Gate-to-Drain "Miller" Charge	Qgd	V_{DS}=–10V, V_{GS}=–10V, I_D=–1A		1		nC
Diode Forward Voltage	V_{SD}	I_S=–1A, V_{GS}=0		–0.9	–1.5	V

Switching Time Test Circuit

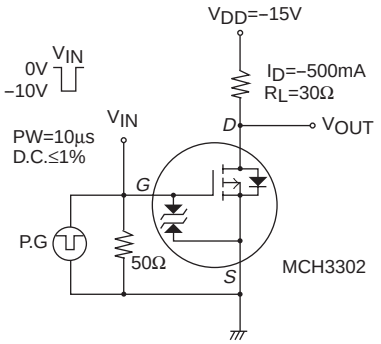

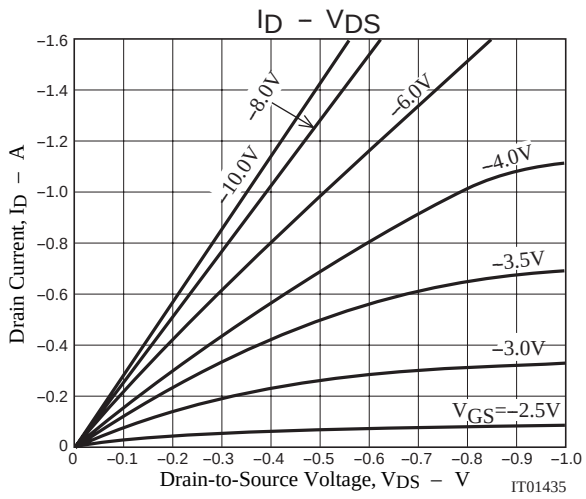

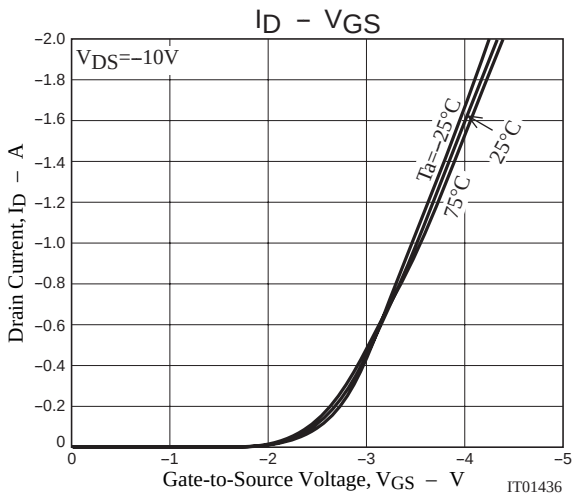

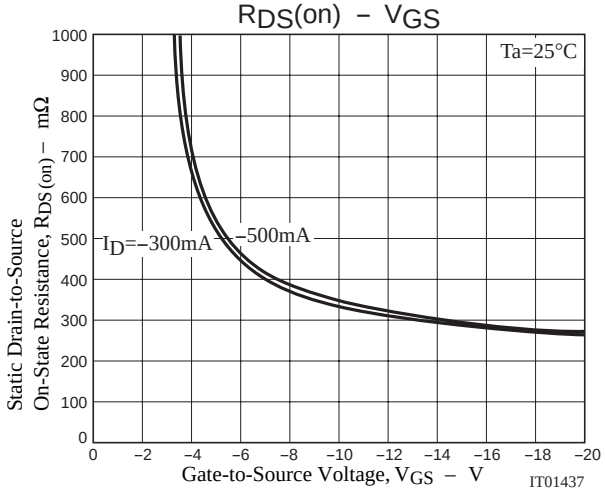

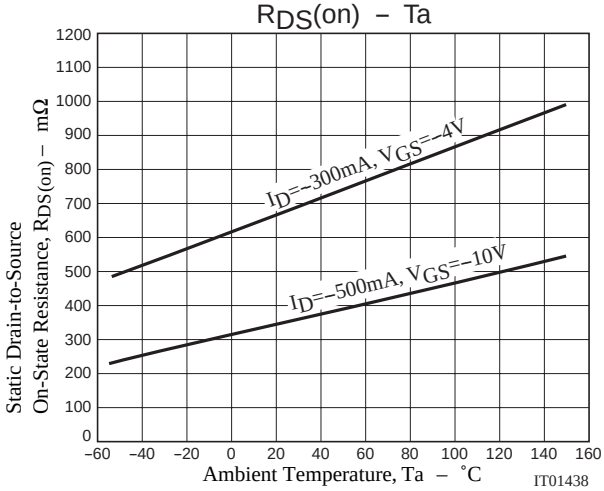

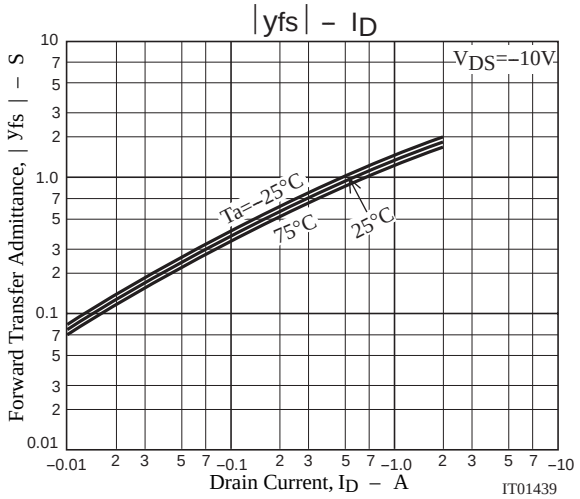
|yfs| – ID
VDS=–10V
Ta=–25°C
75°C
25°C
Forward Transfer Admittance, |yfs| – S
Drain Current, ID – A
IT01439

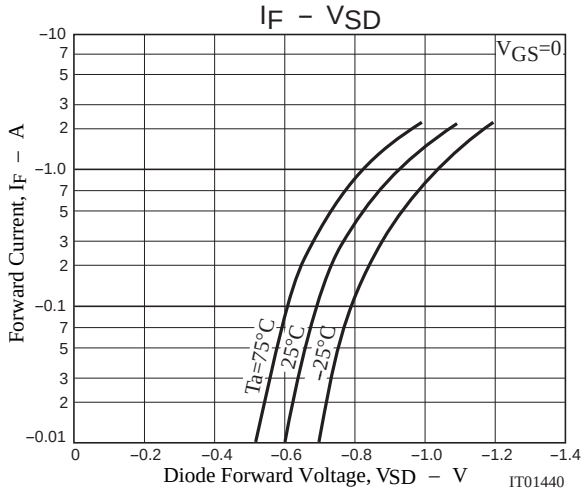
IF – VSD
VGS=0
Ta=75°C
25°C
–25°C
Forward Current, IF – A
Diode Forward Voltage, VSD – V
IT01440

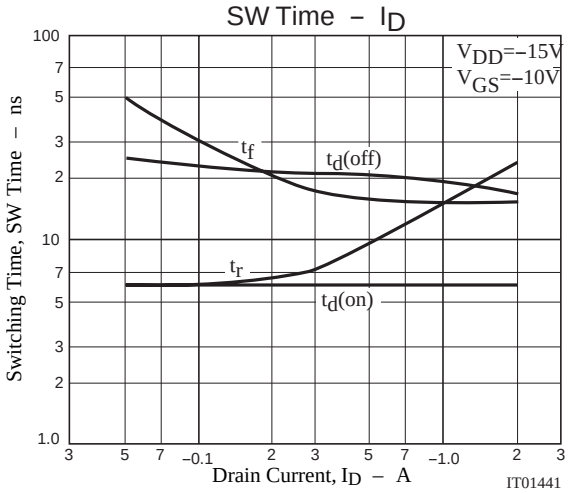
SW Time – ID
VDD=–15V
VGS=–10V
tf
td(off)
tr
td(on)
Switching Time, SW Time – ns
Drain Current, ID – A
IT01441

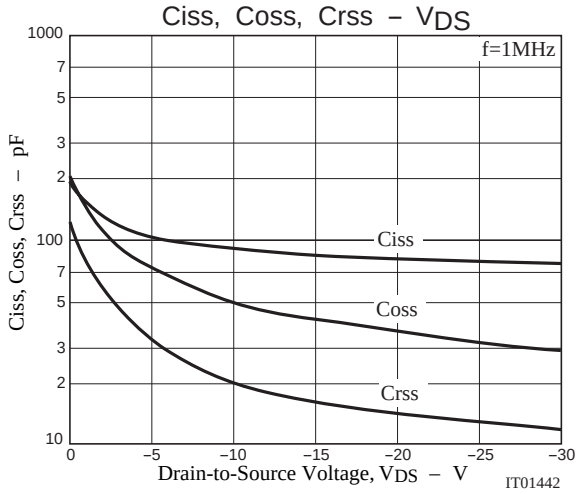
Ciss, Coss, Crss – VDS
f=1MHz
Ciss
Coss
Crss
Ciss, Coss, Crss – pF
Drain-to-Source Voltage, VDS – V
IT01442

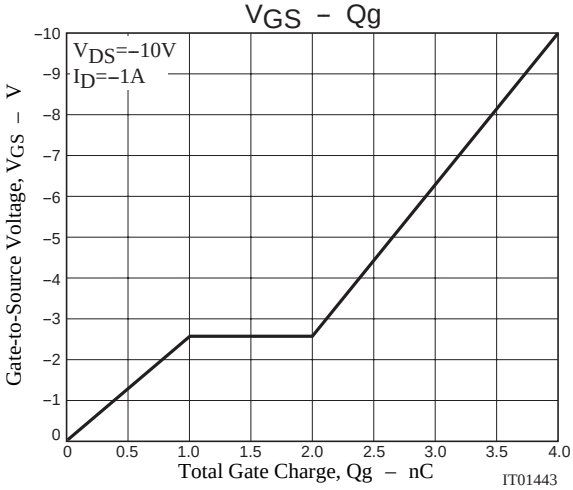
VGS – Qg
VDS=–10V
ID=–1A
Gate-to-Source Voltage, VGS – V
Total Gate Charge, Qg – nC
IT01443

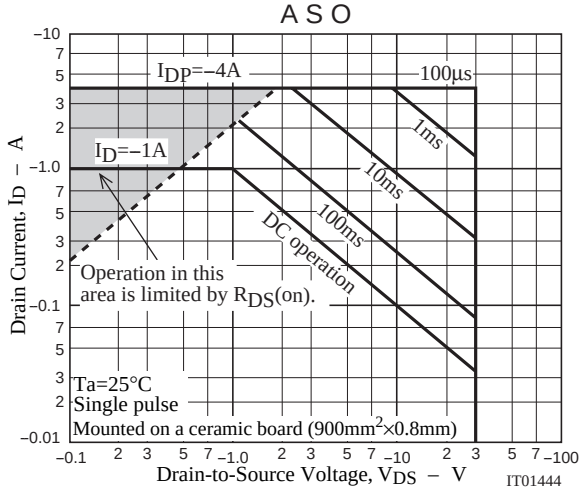
A S O
IDP=–4A
100μs
1ms
10ms
100ms
DC operation
ID=–1A
Operation in this
area is limited by RDS(on).
Ta=25°C
Single pulse
Mounted on a ceramic board (900mm2×0.8mm)
Drain Current, ID – A
Drain-to-Source Voltage, VDS – V
IT01444

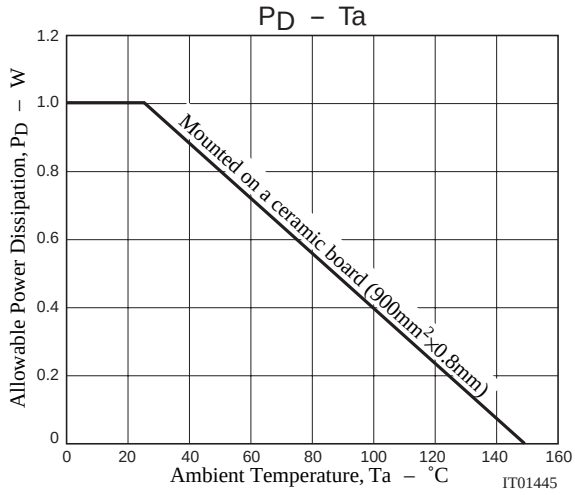
PD – Ta
Mounted on a ceramic board (900mm2×0.8mm)
Allowable Power Dissipation, PD – W
Ambient Temperature, Ta – °C
IT01445

- Specifications of any and all SANYO products described or contained herein stipulate the performance, characteristics, and functions of the described products in the independent state, and are not guarantees of the performance, characteristics, and functions of the described products as mounted in the customer's products or equipment. To verify symptoms and states that cannot be evaluated in an independent device, the customer should always evaluate and test devices mounted in the customer's products or equipment.
- SANYO Electric Co., Ltd. strives to supply high-quality high-reliability products. However, any and all semiconductor products fail with some probability. It is possible that these probabilistic failures could give rise to accidents or events that could endanger human lives, that could give rise to smoke or fire, or that could cause damage to other property. When designing equipment, adopt safety measures so that these kinds of accidents or events cannot occur. Such measures include but are not limited to protective circuits and error prevention circuits for safe design, redundant design, and structural design.
- In the event that any or all SANYO products(including technical data,services) described or contained herein are controlled under any of applicable local export control laws and regulations, such products must not be exported without obtaining the export license from the authorities concerned in accordance with the above law.
- No part of this publication may be reproduced or transmitted in any form or by any means, electronic or mechanical, including photocopying and recording, or any information storage or retrieval system, or otherwise, without the prior written permission of SANYO Electric Co., Ltd.
- Any and all information described or contained herein are subject to change without notice due to product/technology improvement, etc. When designing equipment, refer to the "Delivery Specification" for the SANYO product that you intend to use.
- Information (including circuit diagrams and circuit parameters) herein is for example only ; it is not guaranteed for volume production. SANYO believes information herein is accurate and reliable, but no guarantees are made or implied regarding its use or any infringements of intellectual property rights or other rights of third parties.

This catalog provides information as of March, 2000. Specifications and information herein are subject to change without notice.