查询HA17902供应商 捷多邦，专业PCB打样工厂，24小时加急出货

HA17902 Series

Quad Operational Amplifier

HITACHI

Description

The HA17902 is an internal phase compensation quad operational amplifier that operates on a single-voltage power supply and is appropriate for use in a wide range of general-purpose control equipment.

Features

- Wide usable power-supply voltage range and single-voltage supply operation
- Internal phase compensation
- Wide common-mode voltage range and operation for inputs close to the 0 level

Ordering Information

Type No.	Application	Package
HA17902PJ	Car use	DP-14
HA17902FPJ		FP-14DA
HA17902FPK		FP-14DA
HA17902P	Industrial use	DP-14
HA17902FP		FP-14DA
HA17902	Commercial use	DP-14

找PDF 维库一下 pdf.dzsc.com

Hitachi semiconductor

Pin Arrangement

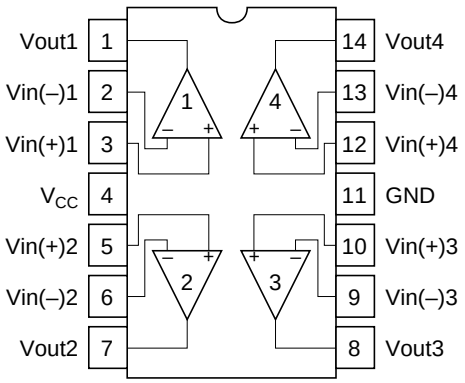

(Top view)

Circuit Structure (1/4)

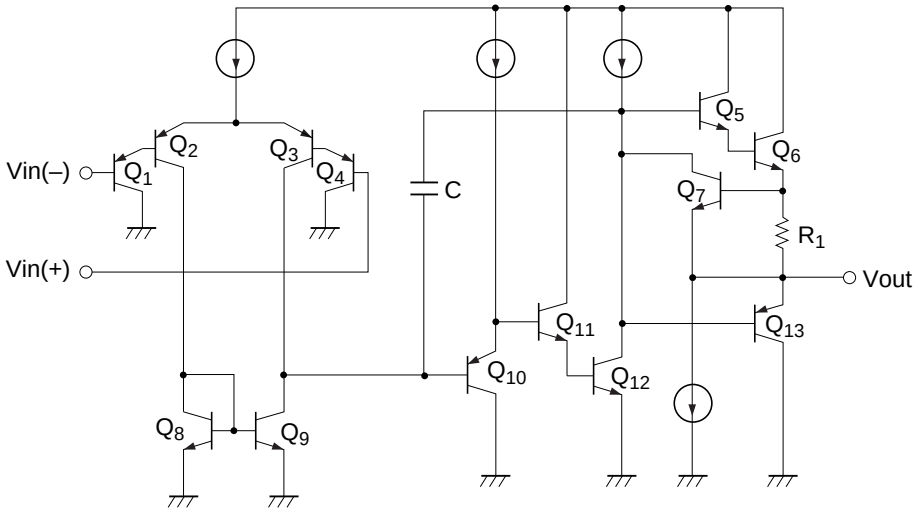

Absolute Maximum Ratings (Ta = 25°C)

Item	Symbol	HA17902/ P	HA17902 PJ	HA17902 FP	HA17902 FPJ	HA17902 FPK	Unit
Power supply voltage	V_{CC}	28	28	28	28	28	V
Sink current	Io sink	50	50	50	50	25	mA
Allowable power dissipation	P_T	625*[1]	625*[1]	625*[2]	625*[2]	625*[2]	mW
Common-mode input voltage	V_{CM}	–0.3 to V_{CC}	–0.3 to V_{CC}	–0.3 to V_{CC}	–0.3 to V_{CC}	–0.3 to V_{CC}	V
Differential-mode input voltage	Vin(diff)	$\pm V_{CC}$	$\pm V_{CC}$	$\pm V_{CC}$	$\pm V_{CC}$	$\pm V_{CC}$	V
Operating temperature	Topr	–20 to +75	–40 to +85	–20 to +75	–40 to +85	–40 to +125	°C
Storage temperature	Tstg	–55 to +125	–55 to +125	–55 to +125	–55 to +125	–55 to +150	°C

Notes: 1. These are the allowable values up to Ta = 50°C. Derate by 8.3mW/°C above that temperature.
2. See notes on SOP Package Usage in Reliability section.

Electrical Characteristics 1 (V_{CC} = + 15V, Ta = 25°C)

Item	Symbol	Min	Typ	Max	Unit	Test Conditions
Input offset voltage	V_{IO}	—	3	8	mV	V_{CM} = 7.5V, R_S = 50Ω, Rf = 5kΩ
Input offset current	I_{IO}	—	5	50	nA	$I_{IO} = \lvert I_I^- - I_I^+ \rvert$, V_{CM} = 7.5V
Input bias current	I_{IB}	—	30	500	nA	V_{CM} = 7.5V
Power-supply rejection ratio	PSRR	—	93	—	dB	f = 100Hz, R_S = 1kΩ, Rf = 100kΩ
Voltage gain	A_{VD}	75	90	—	dB	R_S = 1kΩ, Rf = 100kΩ, RL = ∞
Common-mode rejection ratio	CMR	—	80	—	dB	R_S = 50Ω, Rf = 5kΩ
Common-mode input voltage range	V_{CM}	–0.3	—	13.5	V	R_S = 1kΩ, Rf = 100kΩ, f = 100Hz
Maximum output voltage amplitude	V_{OP-P}	—	13.6	—	V	f = 100Hz, R_S = 1kΩ, Rf = 100kΩ, R_L = 20kΩ
Output voltage	V_{OH1}	13.2	13.6	—	V	I_{OH} = –1mA
	V_{OH2}	12	13.3	—	V	I_{OH} = –10mA
	V_{OL1}	—	0.8	1	V	I_{OL} = 1mA
	V_{OL2}	—	1.1	1.8	V	I_{OL} = 10mA
Output source current	Io source	15	—	—	mA	V_{OH} = 10V
Output sink current	Io sink	3	9	—	mA	V_{OL} = 1V
Supply current	I_{CC}	—	0.8	2	mA	Vin = GND, R_L = ∞
Slew rate	SR	—	0.19	—	V/µs	f = 1.5kHz, V_{CM} = 7.5V, R_L = ∞
Channel separation	CS	—	120	—	dB	f = 1kHz

Electrical Characteristics 2 (V_{CC} = + 15V, Ta = – 40 to 125°C)

Item	Symbol	Min	Typ	Max	Unit	Test Conditions
Input offset voltage	V_{IO}	—	—	8	mV	V_{CM} = 7.5V, R_S = 50Ω, Rf = 5kΩ
Input offset current	I_{IO}	—	—	200	nA	V_{CM} = 7.5V , $I_{IO} = \lvert I_I^- - I_I^+ \rvert$
Input bias current	I_{IB}	—	—	500	nA	V_{CM} = 7.5V
Common-mode input voltage range	V_{CM}	0	—	13.0	V	R_S = 1kΩ, Rf = 100kΩ, f = 100Hz
Output voltage	V_{OH}	13.0	—	—	V	I_{OH} = –1mA
	V_{OL}	—	—	1.3	V	I_{OL} = 1mA
Supply current	I_{CC}	—	—	4	mA	Vin = GND, R_L = ∞

Test Circuits

1. Input offset voltage (V_{IO}), input offset current (I_{IO}), and Input bias current (I_{IB}) test circuit

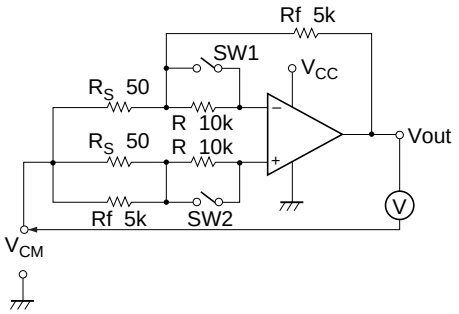

SW1	SW2	V_O
On	On	V_{O1}
Off	Off	V_{O2}
On	Off	V_{O3}
Off	On	V_{O4}

$$V_{CM} = \frac{1}{2} V_{CC}$$

$$V_{IO} = \frac{V_{O1}}{1 + Rf / R_S} \quad \text{(mV)}$$

$$I_{IO} = \frac{V_{O2} - V_{O1}}{R(1 + Rf / R_S)} \quad \text{(nA)}$$

$$I_{IB} = \frac{| V_{O4} - V_{O3} |}{2 \cdot R(1 + Rf / R_S)} \quad \text{(nA)}$$

2. Common-mode rejection ratio (CMR) test circuit

$$CMR = 20 \log \frac{V_{IN} \cdot Rf}{V_O \cdot R_S} \quad \text{(dB)}$$

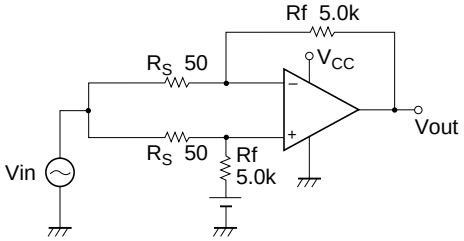

3. Supply current (I_{CC}) test circuit

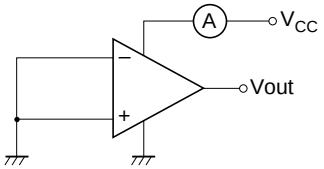

4. Voltage gain (A_{VD}), slew rate (SR), common-mode input voltage range (V_{CM}), and maximum output voltage amplitude (V_{OP-P}) test circuit.

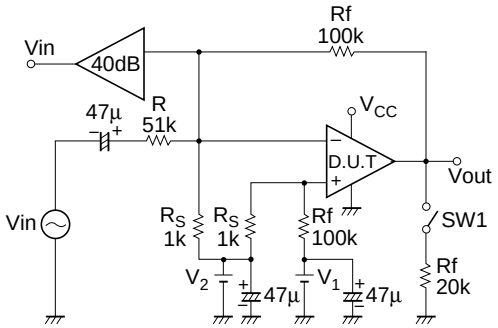

(1) A_{VD}: $R_S = 1k\Omega$, $Rf = 100k\Omega$, $R_L = \infty$, $V_1 = V_2 = 1/2\ V_{CC}$

$$A_{VD} = 20 \log \frac{V_O}{V_{IN}} + 40 \qquad \text{(dB)}$$

(2) SR: f = 1.5kHz, $R_L = \infty$, $V_1 = V_2 = 1/2\ V_{CC}$

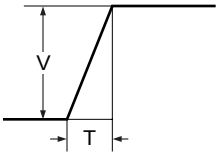

$$SR = \frac{V}{T} \ [V/\mu s]$$

(3) V_{CM}: $R_S = 1k\Omega$, $Rf = 100k\Omega$, f = 100Hz, $V_1 = 1/2\ V_{CC}$, $R_L = \infty$,
and the value of V_2 just slightly prior to the point where the output waveform changes.

(4) V_{OP-P}:$R_S = 1k\Omega$, $Rf = 100k\Omega$, R_L: $20k\Omega$, f = 100Hz, $V_{OP-P} = V_{OH} \leftrightarrow V_{OL}$ [V_{P-P}]

5. Output source current (Iosource) test circuit
   Io source: $V_{OH} = 10V$

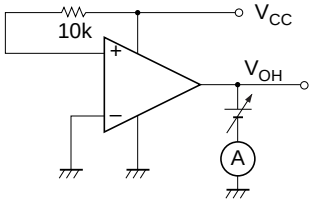

6. Output sink current (Iosink) test circuit
   Io sink: $V_{OL} = 1V$

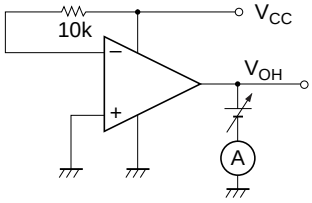

Characteristics Curve

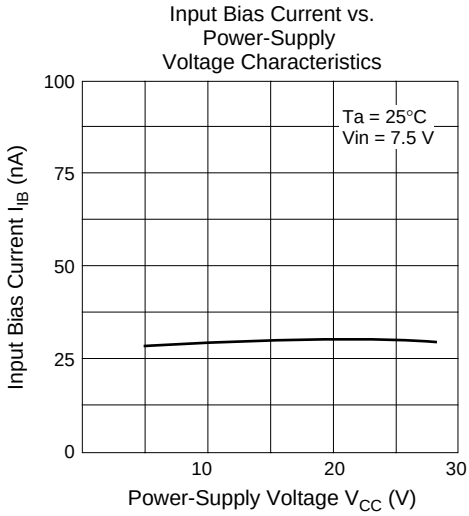

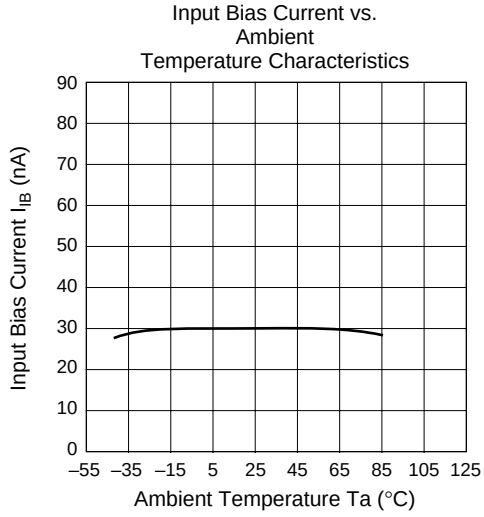

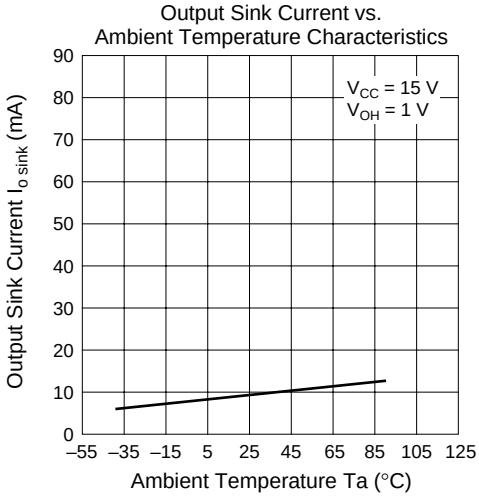

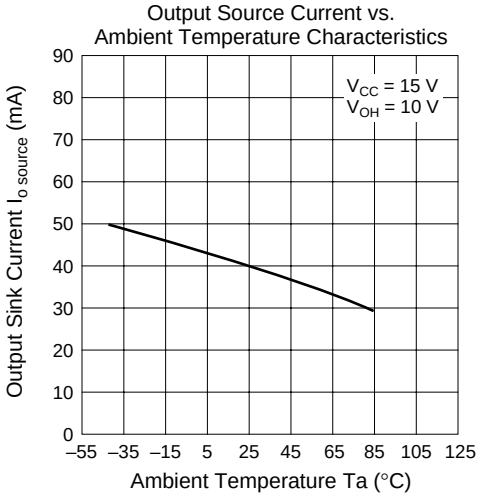

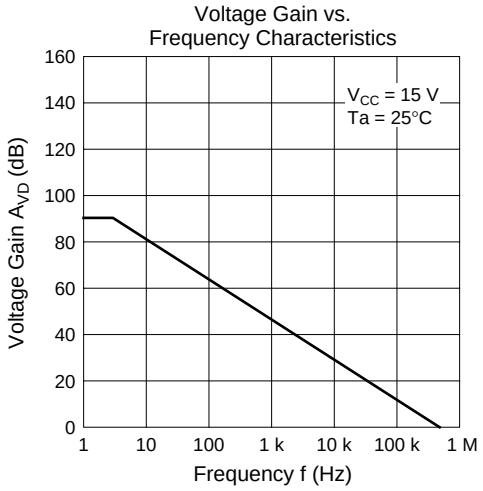
Voltage Gain vs.
Frequency Characteristics
V_{CC} = 15 V
Ta = 25°C
Voltage Gain A_{VD} (dB)
160
140
120
100
80
60
40
20
0
1
10
100
1 k
10 k
100 k
1 M
Frequency f (Hz)

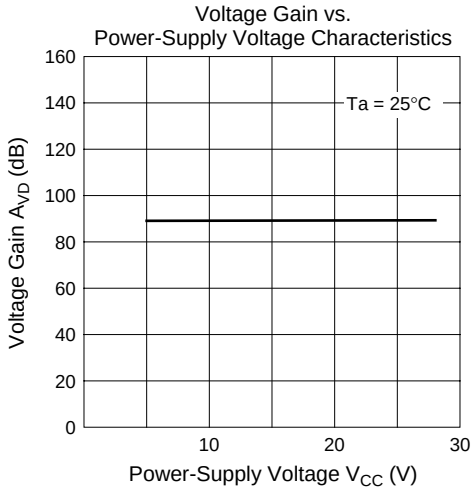
Voltage Gain vs.
Power-Supply Voltage Characteristics
Ta = 25°C
Voltage Gain A_{VD} (dB)
160
140
120
100
80
60
40
20
0
10
20
30
Power-Supply Voltage V_{CC} (V)

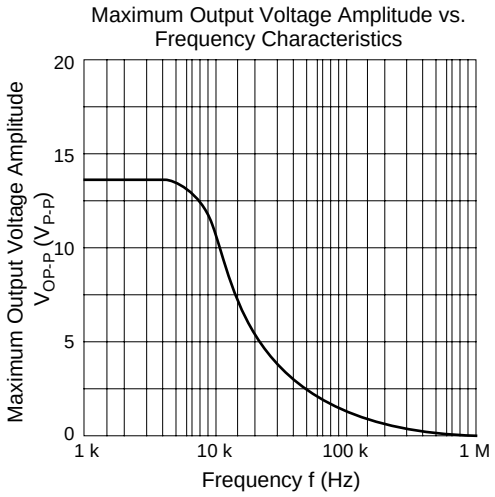
Maximum Output Voltage Amplitude vs.
Frequency Characteristics
Maximum Output Voltage Amplitude
V_{OP-P} (V_{P-P})
20
15
10
5
0
1 k
10 k
100 k
1 M
Frequency f (Hz)

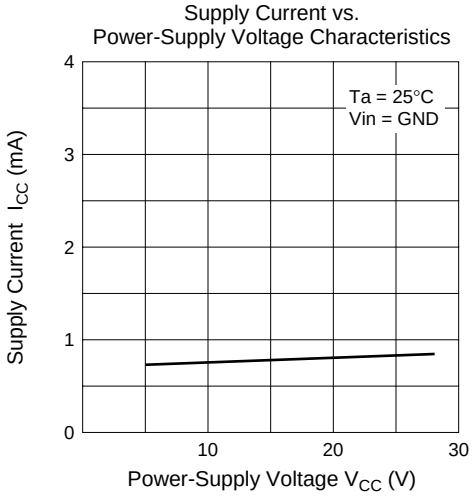
Supply Current vs.
Power-Supply Voltage Characteristics
Ta = 25°C
Vin = GND
Supply Current I_{CC} (mA)
4
3
2
1
0
10
20
30
Power-Supply Voltage V_{CC} (V)

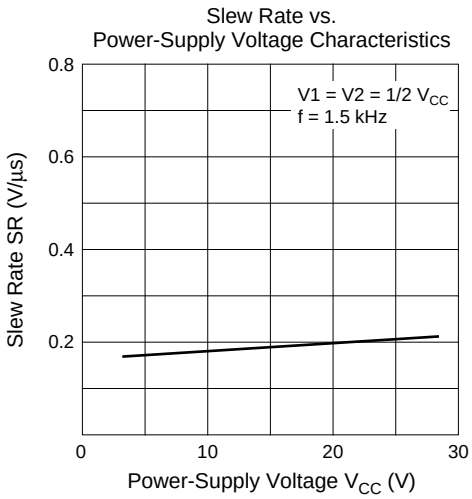
Slew Rate vs.
Power-Supply Voltage Characteristics
V1 = V2 = 1/2 V_{CC}
f = 1.5 kHz
Slew Rate SR (V/µs)
0.8
0.6
0.4
0.2
0
10
20
30
Power-Supply Voltage V_{CC} (V)

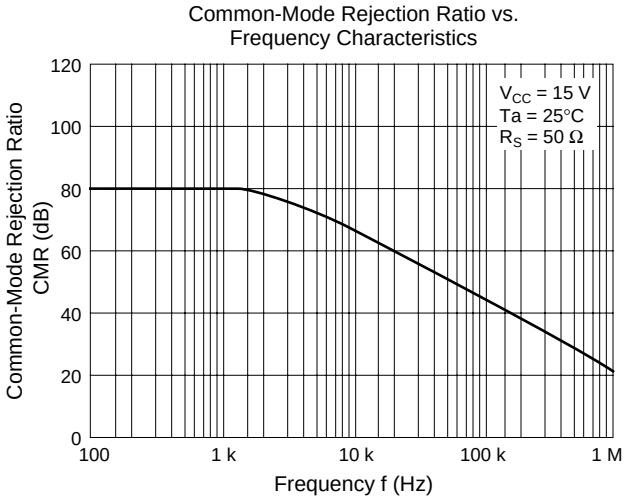
Common-Mode Rejection Ratio vs.
Frequency Characteristics
V_{CC} = 15 V
Ta = 25°C
R_S = 50 Ω
Common-Mode Rejection Ratio
CMR (dB)
120
100
80
60
40
20
0
100
1 k
10 k
100 k
1 M
Frequency f (Hz)

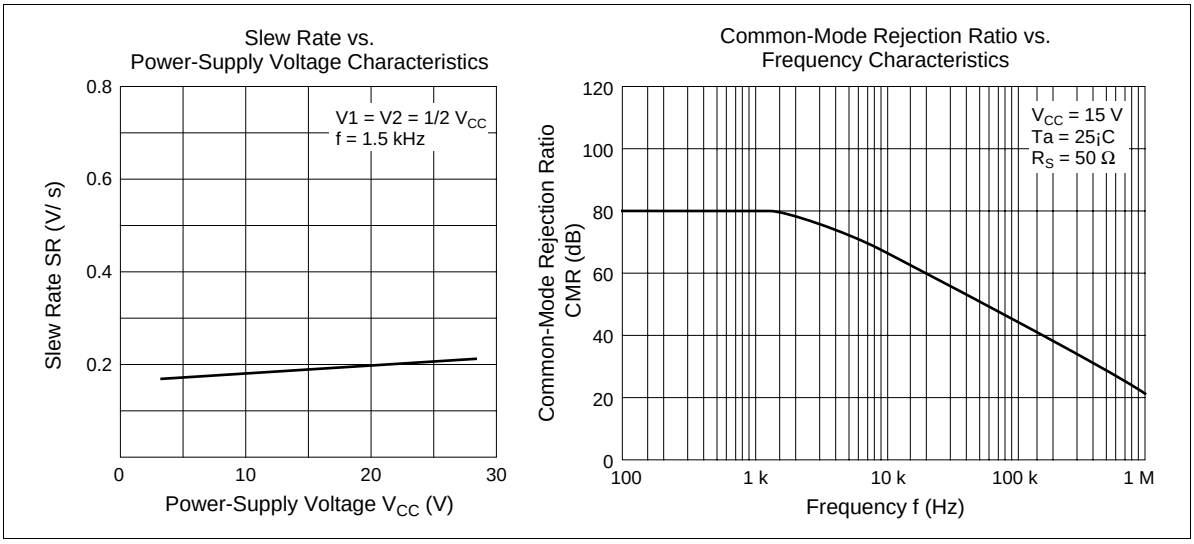
Slew Rate vs.
Power-Supply Voltage Characteristics
V1 = V2 = 1/2 VCC
f = 1.5 kHz
Slew Rate SR (V/ s)
0.8
0.6
0.4
0.2
0
10
20
30
Power-Supply Voltage VCC (V)
Common-Mode Rejection Ratio vs.
Frequency Characteristics
VCC = 15 V
Ta = 25¡C
RS = 50 Ω
Common-Mode Rejection Ratio
CMR (dB)
120
100
80
60
40
20
0
100
1 k
10 k
100 k
1 M
Frequency f (Hz)

HA17902 Application Examples

The HA17902 is a quad operational amplifier, and consists of four operational amplifier circuits and one bias current circuit. It features single-voltage power supply operation, internal phase compensation, a wide zero-cross bandwidth, a low input bias current, and a high open-loop gain. Thus the HA17902 can be used in a wide range of applications. This section describes several applications using the HA17902.

1. Noninverting Amplifier

   Figure 1 shows the circuit diagram for a noninverting amplifier. The voltage gain of this amplifier is given by the following formula.

$$\frac{Vout}{Vin} = 1 + \frac{R2}{R1}$$

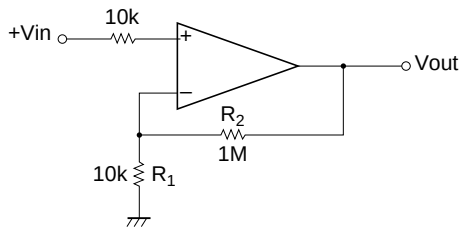

Figure 1 Noninverting Amplifier

2. Summing Amplifier

   Since the circuit shown in figure 2 applies $+V_1$ and $+V_2$ to the noninverting input and $+V_3$ and $+V_4$ to the inverting input, the total output will be $Vout = V_1 + V_2 – V_3 – V_4$.

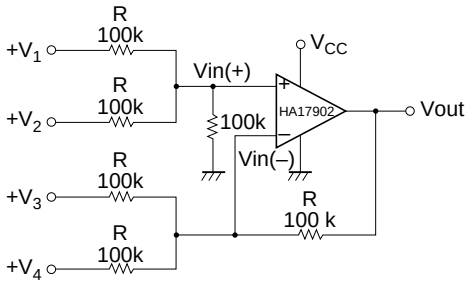

Figure 2 Summing Amplifier

3. High Input Impedance DC Differential Amplifier

The circuit shown in figure 3 is a high input impedance DC differential amplifier. This circuit's common-mode rejection ratio (CMR) depends on the matching between the R_1/R_2 and R_4/R_3 resistance ratios. This amplifier's output is given by the following formula.

$$Vout = \left(1 + \frac{R_4}{R_3}\right)(V_2 - V_1)$$

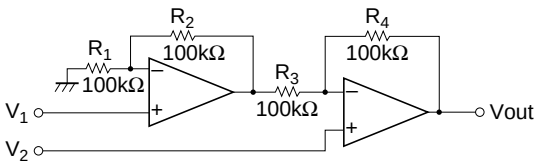

Figure 3 High Input Impedance DC Differential Amplifier

4. Voltage Controlled Oscillator

Figure 4 shows an oscillator circuit in which the amplifier A_1 is an integrator, the amplifier A_2 is a comparator, and transistor Q_1 operates as a switch that controls the oscillator frequency. If the output Vout1 is at the low level, this will cut off transistor Q1 and cause the A_1 inverting input to go to a higher potential than the noninverting input. Therefore, A_1 will integrate this negative input state and its output level will decrease. When the A_1 integrator output becomes lower than the A_2 comparator noninverting input level ($V_{CC}/2$) the comparator output goes high. This turns on transistor Q_1 causing the integrator to integrate a positive input state and for its output to increase. This operation generates a square wave on Vout1 and a triangular wave on Vout2.

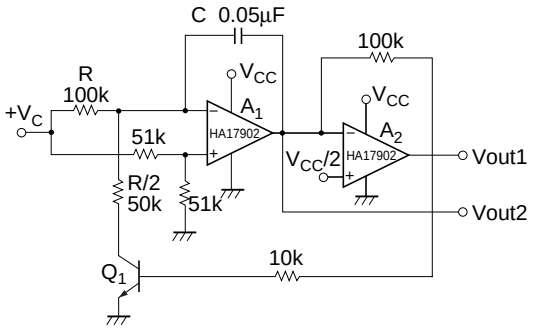

Figure 4 Voltage Controlled Oscillator

Package Dimensions

Unit: mm

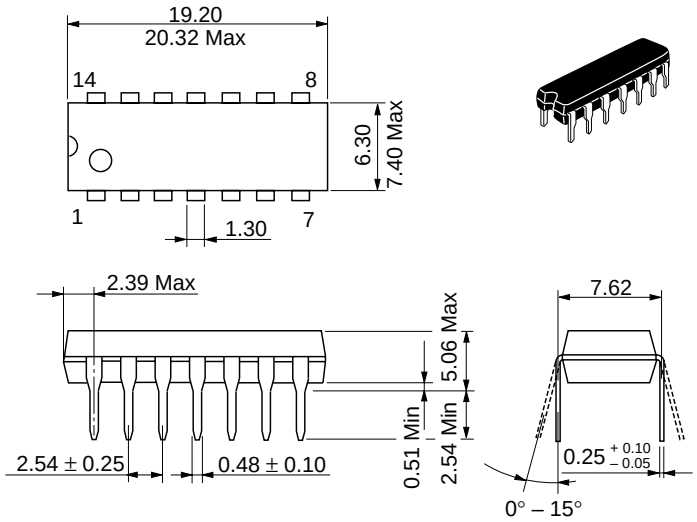

Hitachi Code	DP-14
JEDEC	Conforms
EIAJ	Conforms
Mass (reference value)	0.97 g

Unit: mm

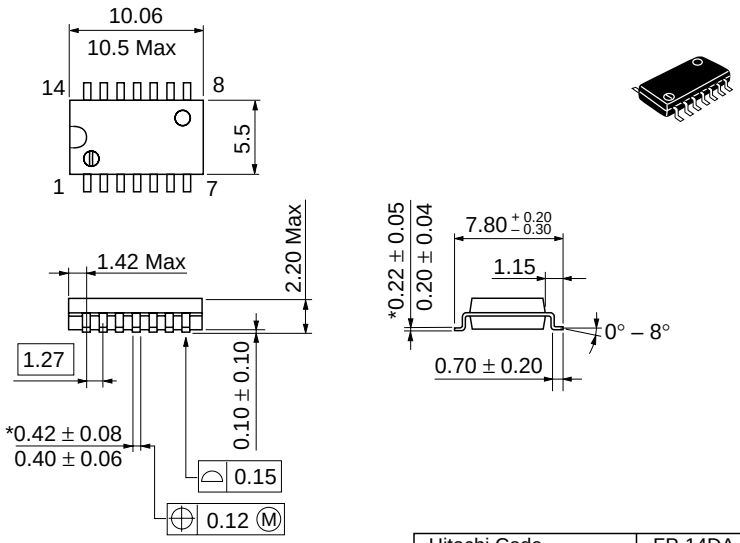

Hitachi Code	FP-14DA
JEDEC	—
EIAJ	Conforms
Mass (reference value)	0.23 g

*Dimension including the plating thickness / Base material dimension

Cautions

1. Hitachi neither warrants nor grants licenses of any rights of Hitachi's or any third party's patent, copyright, trademark, or other intellectual property rights for information contained in this document. Hitachi bears no responsibility for problems that may arise with third party's rights, including intellectual property rights, in connection with use of the information contained in this document.
2. Products and product specifications may be subject to change without notice. Confirm that you have received the latest product standards or specifications before final design, purchase or use.
3. Hitachi makes every attempt to ensure that its products are of high quality and reliability. However, contact Hitachi's sales office before using the product in an application that demands especially high quality and reliability or where its failure or malfunction may directly threaten human life or cause risk of bodily injury, such as aerospace, aeronautics, nuclear power, combustion control, transportation, traffic, safety equipment or medical equipment for life support.
4. Design your application so that the product is used within the ranges guaranteed by Hitachi particularly for maximum rating, operating supply voltage range, heat radiation characteristics, installation conditions and other characteristics. Hitachi bears no responsibility for failure or damage when used beyond the guaranteed ranges. Even within the guaranteed ranges, consider normally foreseeable failure rates or failure modes in semiconductor devices and employ systemic measures such as fail-safes, so that the equipment incorporating Hitachi product does not cause bodily injury, fire or other consequential damage due to operation of the Hitachi product.
5. This product is not designed to be radiation resistant.
6. No one is permitted to reproduce or duplicate, in any form, the whole or part of this document without written approval from Hitachi.
7. Contact Hitachi's sales office for any questions regarding this document or Hitachi semiconductor products.

HITACHI

Hitachi, Ltd.
Semiconductor & Integrated Circuits.
Nippon Bldg., 2-6-2, Ohte-machi, Chiyoda-ku, Tokyo 100-0004, Japan
Tel: Tokyo (03) 3270-2111 Fax: (03) 3270-5109

URL	NorthAmerica	:	http:semiconductor.hitachi.com/
	Europe	:	http://www.hitachi-eu.com/hel/ecg
	Asia (Singapore)	:	http://www.has.hitachi.com.sg/grp3/sicd/index.htm
	Asia (Taiwan)	:	http://www.hitachi.com.tw/E/Product/SICD_Frame.htm
	Asia (HongKong)	:	http://www.hitachi.com.hk/eng/bo/grp3/index.htm
	Japan	:	http://www.hitachi.co.jp/Sicd/indx.htm

For further information write to:

Hitachi Semiconductor
(America) Inc.
179 East Tasman Drive,
San Jose,CA 95134
Tel: <1> (408) 433-1990
Fax: <1>(408) 433-0223

Hitachi Europe GmbH
Electronic components Group
Dornacher Straβe 3
D-85622 Feldkirchen, Munich
Germany
Tel: <49> (89) 9 9180-0
Fax: <49> (89) 9 29 30 00

Hitachi Europe Ltd.
Electronic Components Group.
Whitebrook Park
Lower Cookham Road
Maidenhead
Berkshire SL6 8YA, United Kingdom
Tel: <44> (1628) 585000
Fax: <44> (1628) 778322

Hitachi Asia Pte. Ltd.
16 Collyer Quay #20-00
Hitachi Tower
Singapore 049318
Tel: 535-2100
Fax: 535-1533

Hitachi Asia Ltd.
Taipei Branch Office
3F, Hung Kuo Building. No.167,
Tun-Hwa North Road, Taipei (105)
Tel: <886> (2) 2718-3666
Fax: <886> (2) 2718-8180

Hitachi Asia (Hong Kong) Ltd.
Group III (Electronic Components)
7/F., North Tower, World Finance Centre,
Harbour City, Canton Road, Tsim Sha Tsui,
Kowloon, Hong Kong
Tel: <852> (2) 735 9218
Fax: <852> (2) 730 0281
Telex: 40815 HITEC HX

Copyright ' Hitachi, Ltd., 1998. All rights reserved. Printed in Japan.