查询HAF2008供应商 捷多邦，专业PCB打样工厂，24小时加急出货

HAF2008

Silicon N Channel MOS FET Series
Power Switching

HITACHI

Target specification
ADE-208-707 (Z)
1st. Edition
Dec. 1998

This FET has the over temperature shut–down capability sensing to the junction temperature. This FET has the built–in over temperature shut–down circuit in the gate area. And this circuit operation to shut–down the gate voltage in case of high junction temperature like applying over power consumption, over current etc.

Features

- Logic level operation (4 to 6 V Gate drive)
- High endurance capability against to the short circuit
- Built–in the over temperature shut–down circuit
- Latch type shut–down operation (Need 0 voltage recovery)

Outline

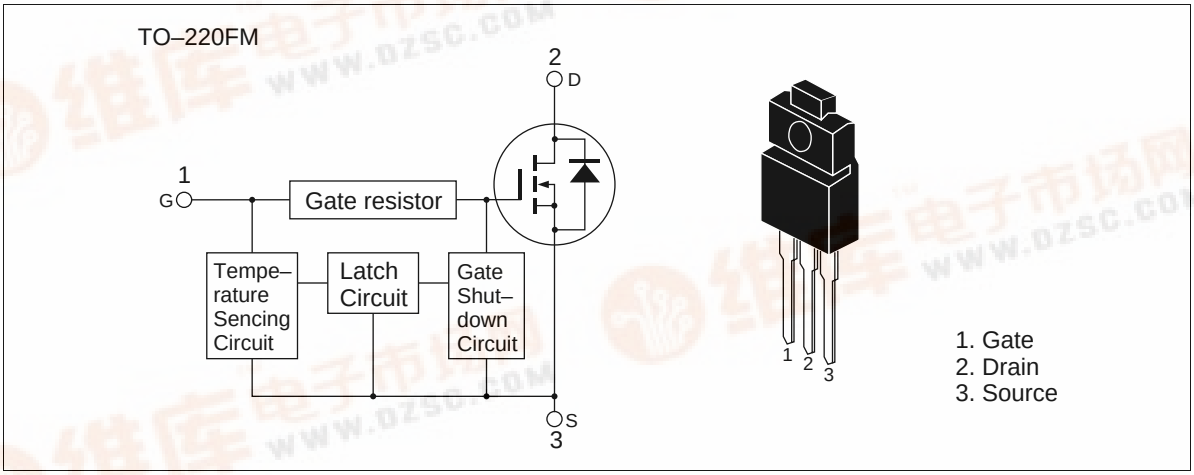

找PDF 维库一下 pdf.dzsc.com

Hitachi semiconductor

Absolute Maximum Ratings (Ta = 25°C)

Item	Symbol	Ratings	Unit
Drain to source voltage	V_{DSS}	60	V
Gate to source voltage	V_{GSS}	(16)	V
Gate to source voltage	V_{GSS}	(–2.5)	V
Drain current	I_D	20	A
Drain peak current	$I_{D(pulse)}$ Note1	40	A
Body-drain diode reverse drain current	I_{DR}	20	A
Channel dissipation	Pch Note2	30	W
Channel temperature	Tch	150	°C
Storage temperature	Tstg	–55 to +150	°C

Note: 1. PW ≤ 10µs, duty cycle ≤ 1 %
2. Value at Ta = 25°C

Typical Operation Characteristics

Item	Symbol	Min	Typ	Max	Unit	Test Conditions
Input voltage	V_{IH}	3.5	—	—	V	
	V_{IL}	—	—	1.2	V	
Input current	I_{IH1}	—	—	100	µA	Vi = 8V, V_{DS} = 0
(Gate non shut down)	I_{IH2}	—	—	50	µA	Vi = 3.5V, V_{DS} = 0
	I_{IL}	—	—	1	µA	Vi = 1.2V, V_{DS} = 0
Input current	$I_{IH(sd)1}$	—	0.8	—	mA	Vi = 8V, V_{DS} = 0
(Gate non shut down)	$I_{IH(sd)2}$	—	0.35	—	mA	Vi = 3.5V, V_{DS} = 0
Shut down temperature	T_{sd}	—	175	—	°C	Channel temperature
Gate operation voltage	V_{op}	3.5	—	12	V	

Electrical Characteristics (Ta = 25°C)

Item	Symbol	Min	Typ	Max	Unit	Test Conditions
Drain current	I_{D1}	(25)	—	—	A	V_{GS} = 3.5V, V_{DS} = 2V
Drain current	I_{D2}	—	—	10	mA	V_{GS} = 1.2V, V_{DS} = 2V
Drain to source breakdown voltage	$V_{(BR)DSS}$	60	—	—	V	I_D = 10mA, V_{GS} = 0
Gate to source breakdown voltage	$V_{(BR)GSS}$	(16)	—	—	V	I_G = (300µA), V_{DS} = 0
Gate to source breakdown voltage	$V_{(BR)GSS}$	(–2.5)	—	—	V	I_G = (–100µA), V_{DS} = 0
Gate to source leak current	I_{GSS1}	—	—	100	µA	V_{GS} = 8V, V_{DS} = 0
	I_{GSS2}	—	—	50	µA	V_{GS} = 3.5V, V_{DS} = 0
	I_{GSS3}	—	—	1	µA	V_{GS} = 1.2V, V_{DS} = 0
	I_{GSS4}	—	—	–100	µA	V_{GS} = –2.4V, V_{DS} = 0
Input current (shut down)	$I_{GS(op)1}$	—	0.8	—	mA	V_{GS} = 8V, V_{DS} = 0
	$I_{GS(op)2}$	—	0.35	—	mA	V_{GS} = 3.5V, V_{DS} = 0
Zero gate voltege drain current	I_{DSS}	—	—	10	µA	V_{DS} = 60 V, V_{GS} = 0
Gate to source cutoff voltage	$V_{GS(off)}$	1.0	—	2.25	V	I_D = 1mA, V_{DS} = 10V
Static drain to source on state resistance	$R_{DS(on)}$	—	45	60	mΩ	I_D = 10A, V_{GS} = 4V [Note3]
Static drain to source on state resistance	$R_{DS(on)}$	—	28	40	mΩ	I_D = 10A, V_{GS} = 10V [Note3]
Forward transfer admittance	$\|y_{fs}\|$	(11)	(17)	—	S	I_D = 10A, V_{DS} = 10V [Note3]
Output capacitance	Coss	—	(380)	—	pF	V_{DS} = 10V , V_{GS} = 0 f = 1 MHz
Turn-on delay time	$t_{d(on)}$	—	( )	—	µs	I_D = 10A, V_{GS} = 5V
Rise time	t_r	—	( )	—	µs	R_L = 3Ω
Turn-off delay time	$t_{d(off)}$	—	( )	—	µs	
Fall time	t_f	—	( )	—	µs	
Body–drain diode forward voltage	V_{DF}	—	(1.0)	—	V	I_F = 20A, V_{GS} = 0
Body–drain diode reverse recovery time	t_{rr}	—	( )	—	ns	I_F = 20A, V_{GS} = 0 diF/ dt =50A/µs
Over load shut down	t_{os1}	—	( )	—	ms	V_{GS} = 5V, V_{DD} = 12V
operation time [Note4]	t_{os2}	—	( )	—	ms	V_{GS} = 5V, V_{DD} = 24V

Note: 3. Pulse test
4. Include the time shift based on increasing of chennel temperature when operete under over load condition.

Main Characteristics

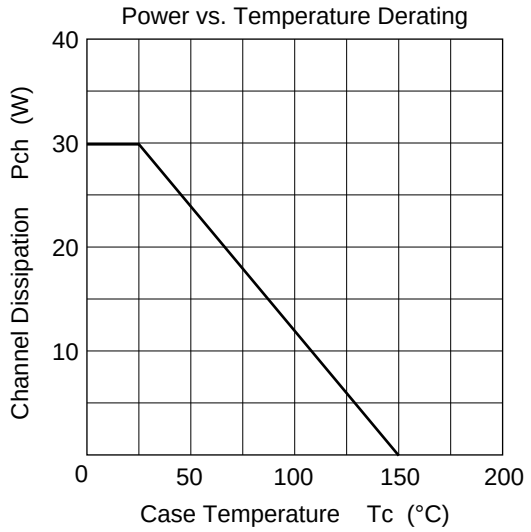

Package Dimensions

Unit: mm

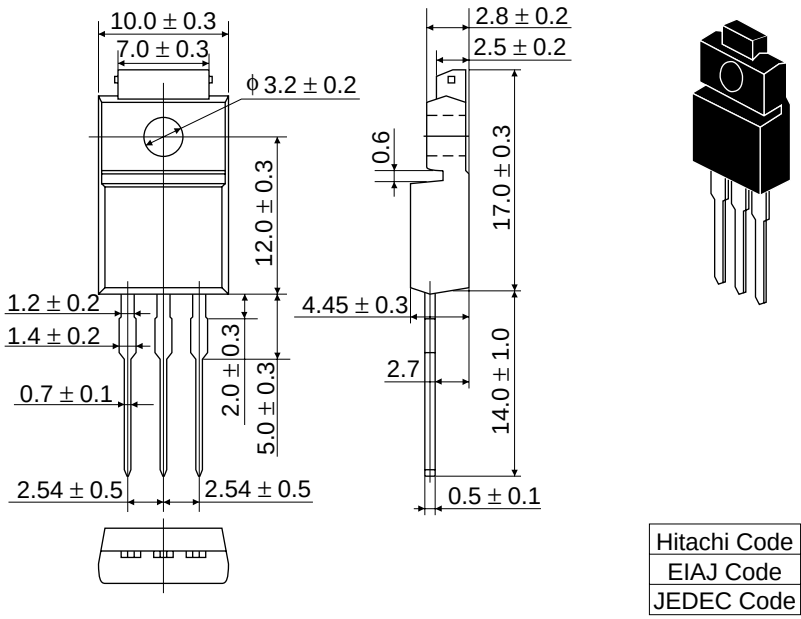

Hitachi Code	TO–220FM
EIAJ Code	SC–72
JEDEC Code	—

Cautions

1. Hitachi neither warrants nor grants licenses of any rights of Hitachi's or any third party's patent, copyright, trademark, or other intellectual property rights for information contained in this document. Hitachi bears no responsibility for problems that may arise with third party's rights, including intellectual property rights, in connection with use of the information contained in this document.
2. Products and product specifications may be subject to change without notice. Confirm that you have received the latest product standards or specifications before final design, purchase or use.
3. Hitachi makes every attempt to ensure that its products are of high quality and reliability. However, contact Hitachi's sales office before using the product in an application that demands especially high quality and reliability or where its failure or malfunction may directly threaten human life or cause risk of bodily injury, such as aerospace, aeronautics, nuclear power, combustion control, transportation, traffic, safety equipment or medical equipment for life support.
4. Design your application so that the product is used within the ranges guaranteed by Hitachi particularly for maximum rating, operating supply voltage range, heat radiation characteristics, installation conditions and other characteristics. Hitachi bears no responsibility for failure or damage when used beyond the guaranteed ranges. Even within the guaranteed ranges, consider normally foreseeable failure rates or failure modes in semiconductor devices and employ systemic measures such as fail-safes, so that the equipment incorporating Hitachi product does not cause bodily injury, fire or other consequential damage due to operation of the Hitachi product.
5. This product is not designed to be radiation resistant.
6. No one is permitted to reproduce or duplicate, in any form, the whole or part of this document without written approval from Hitachi.
7. Contact Hitachi's sales office for any questions regarding this document or Hitachi semiconductor products.

HITACHI

Hitachi, Ltd.
Semiconductor & IC Div.
Nippon Bldg., 2-6-2, Ohte-machi, Chiyoda-ku, Tokyo 100-0004, Japan
Tel: Tokyo (03) 3270-2111 Fax: (03) 3270-5109

URL
NorthAmerica : http:semiconductor.hitachi.com/
Europe : http://www.hitachi-eu.com/hel/ecg
Asia (Singapore) : http://www.has.hitachi.com.sg/grp3/sicd/index.htm
Asia (Taiwan) : http://www.hitachi.com.tw/E/Product/SICD_Frame.htm
Asia (HongKong) : http://www.hitachi.com.hk/eng/bo/grp3/index.htm
Japan : http://www.hitachi.co.jp/Sicd/indx.htm

For further information write to:

Hitachi Semiconductor (America) Inc.
2000 Sierra Point Parkway
Brisbane, CA 94005-1897
Tel: <1> (800) 285-1601
Fax: <1> (303) 297-0447

Hitachi Europe GmbH
Electronic components Group
Dornacher Straße 3
D-85622 Feldkirchen, Munich
Germany
Tel: <49> (89) 9 9180-0
Fax: <49> (89) 9 29 30 00

Hitachi Europe Ltd.
Electronic Components Group.
Whitebrook Park
Lower Cookham Road
Maidenhead
Berkshire SL6 8YA, United Kingdom
Tel: <44> (1628) 585000
Fax: <44> (1628) 778322

Hitachi Asia Pte. Ltd.
16 Collyer Quay #20-00
Hitachi Tower
Singapore 049318
Tel: 535-2100
Fax: 535-1533

Hitachi Asia Ltd.
Taipei Branch Office
3F, Hung Kuo Building. No.167,
Tun-Hwa North Road, Taipei (105)
Tel: <886> (2) 2718-3666
Fax: <886> (2) 2718-8180

Hitachi Asia (Hong Kong) Ltd.
Group III (Electronic Components)
7/F., North Tower, World Finance Centre,
Harbour City, Canton Road, Tsim Sha Tsui,
Kowloon, Hong Kong
Tel: <852> (2) 735 9218
Fax: <852> (2) 730 0281
Telex: 40815 HITEC HX

Copyright © Hitachi, Ltd., 1998. All rights reserved. Printed in Japan.