查询HEDS-1200供应商 捷多邦，专业PCB打样工厂，24小时加急出货

HEWLETT® PACKARD

Optical Reflective Sensors

Technical Data

HEDS-1200 High Resolution Infrared Sensor
HEDS-1300 Precision Resolution Sensor

Features

- **Focused Emitter and Detector in a Single Package**
- **TO5 Package**
- **Binning of Sensors by Photocurrent (Ipr)**

Applications

- **Bar Code Scanning**
- **Pattern Recognition and Verification**
- **Object Sizing**
- **Optical Limit Switching**
- **Optical/Surface Inspection**
- **Tachometry**
- **Edge/Line Sensing**
- **Dimensional Monitoring**

Description

Both the HEDS-1200 and HEDS-1300 sensor are fully integrated modules designed for applications requiring optical reflective sensing. The modules contain an LED emitter (at the appropriate wavelengths) and a matched I.C. photodetector. A bifurcated aspheric lens is used to image the active areas of the emitter and the detector to a single spot that defines the resolution of the sensor. The output signal is a current generated by the photodiode.

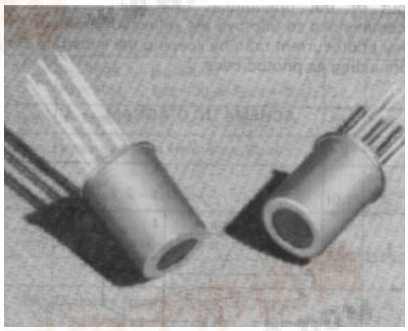

Selection Guide

Sensor Part Number	HEDS-1200	HEDS-1300
Resolution	0.13 mm (0.005 in.)	0.19 mm (0.0075 in.)
LED Wavelength	820 nm	700 nm

Package Dimensions

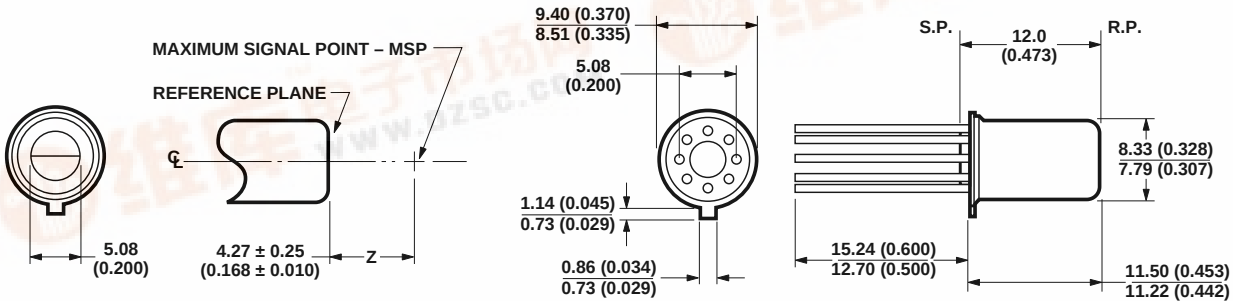

NOTES:
1. ALL DIMENSIONS IN MILLIMETERS AND (INCHES).
2. ALL UNTOLERANCED DIMENSIONS ARE FOR REFERENCE ONLY.
3. THE REFERENCE PLANE (R.P.) IS THE TOP SURFACE OF THE PACKAGE.
4. NICKEL CAN AND GOLD PLATED LEADS.
5. S.P. = SEATING PLANE.
6. THE LEAD DIAMETER IS 0.45 mm (0.018 IN.) TYP.

找PDF 维库一下 pdf.dzsc.com

Mechanical Considerations

The HEDS-1200 and HEDS-1300 sensors are packaged in a high profile 8 pin TO5 metal can with a glass window. The emitter and photodetector chips are mounted on the header at the base of the package. Positioned above these active elements is a bifurcated aspheric acrylic lens that focuses them to the same point.

The sensors can be rigidly secured by commercially available TO5 style heat sinks, or 8 pin 0.200 inch diameter pin circle sockets. These fixtures provide a stable reference platform for affixing the sensors to a circuit board.

In applications requiring contact scanning, protective focusing tips are available. Focusing tips are available in either metal (HBCS-2999 or HBCS-4999) or polycarbonate (HBCS-A998 or HBCS-A999) packages using a rugged sapphire ball as the contact surface.

Electrical Operations

Both the HEDS-1200 and HEDS-1300 sensors have the following in common. The detector of the sensor is a single photodiode. The cathode of the emitter is physically and electrically connected to the case-substrate of the device. Applications that require modulation or switching of the LED should be designed to have the cathode connected to the electrical ground of the system. Refer to the Schematic and Connection Diagrams that follow.

HEDS-1200 Optical System

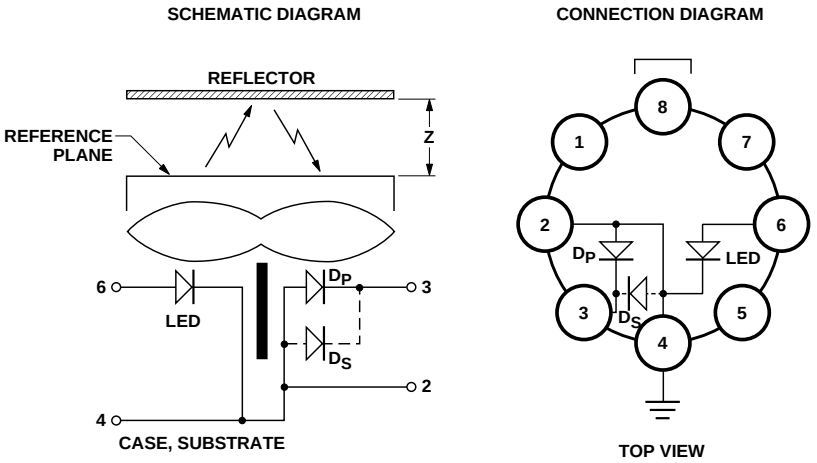

PIN #	FUNCTION (HEDS-1200)
2	PHOTODIODE ANODE, SUBSTRATE, CASE
3	PHOTODIODE CATHODE
4	LED CATHODE, SUBSTRATE, CASE
6	LED ANODE

HEDS-1300 Optical System

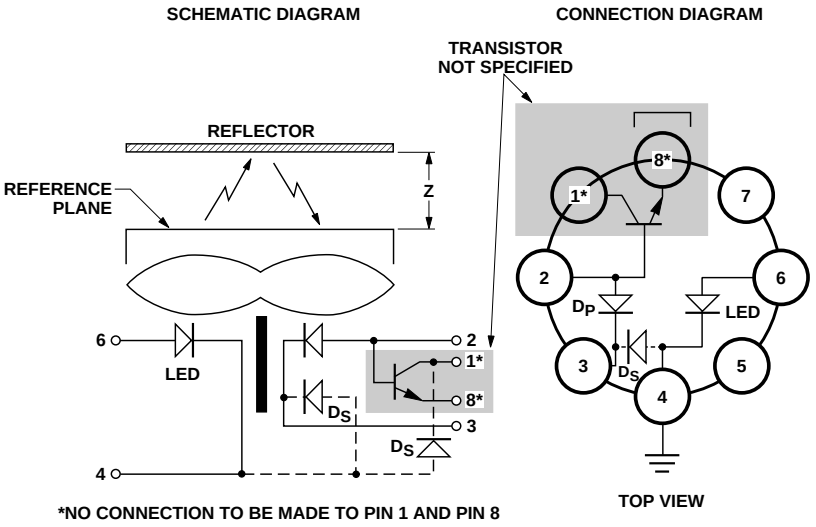

*NO CONNECTION TO BE MADE TO PIN 1 AND PIN 8

PIN #	FUNCTION (HEDS-1300)
2	PHOTODIODE ANODE
3	PHOTODIODE CATHODE
4	LED CATHODE, SUBSTRATE, CASE
6	LED ANODE

Absolute Maximum Ratings @ T_A = 25°C

Parameter	Symbol	HEDS-	Min.	Max.	Units	Fig.	Notes
Storage Temperature	Ts	1200	-40	+75	°C		
		1300	-40	+75	°C		
Operating Temperature	T_A	1200	-20	+70	°C		
		1300	-20	+70	°C		
Lead Soldering Temperature 1.6 mm from Seating Plane		1200		260°C for 10 sec.			1
		1300					1
Average LED Forward Current	If	1200	10	40	mA		3
		1300		50	mA		2
Peak LED Forward Current	Ifpk	1200		40	mA	7	4
		1300		75	mA	7	4
Reverse LED Input Voltage	Vr	1200		2.5	V		
		1300		5.0	V		
Photodiode Bias (Id = 100 µA max)	Vd	1200	-0.3	20	V		5
		1300	-0.3	20	V		5

Notes:
1. Caution: The thermal constraints of the acrylic lens will not permit the use of conventional wave soldering procedures. The typical preheat and post-cleaning temperatures and dwell times can subject the lens to thermal stresses beyond the absolute maximum ratings and can cause it to defocus.
2. Derate Maximum Average Current linearly from 65°C by 6 mA/°C [HEDS-1300 only].
3. Non-linear effects make operation of the HEDS-1200 below 10 mA not advisable.
4. 1 KHz pulse rate, 300 mS pulse width.
5. All voltages referenced to Pin 4.

System Electrical/Optical Characteristics @ T_A = 25°C

Parameter	Symbol	HEDS-	Min.	Typ.	Max.	Units	Conditions	Fig.	Notes
Reflected Photocurrent	Ipr	1200	150	280	650	nA	If = 35 mA, Vd = 0 See Binning Table	1A, 2, 6	6
		1300	150	280	650	nA		1B, 2, 6	6
Quality Factor	<Q>	1200	0.82	0.95	1.0		If = 35 mA	1A	6, 7
		1300	0.82	0.95	1.0			1B	6, 7
Ipr Temperature Coefficient	Ke	1200		-0.005		1/°C	If = 35 mA		8
		1300		-0.01		1/°C			8
System Optical Step Response Size (OSR)	d	1200		0.13		mm		9A	9
		1300		0.19		mm		9B	9
Maximum Signal Point (MSP)	Zm	1200	4.01	4.27	4.62	mm	Measured from Reference Plane	4	
		1300	4.01	4.27	4.52	mm		4	
Effective Numerical Aperture of Detector Lens	N.A.	1200		0.3					
		1300		0.3					

Notes:
6. Measured from a reflector coated with 99% diffuse reflective white paint (Kodak 6080) positioned 4.27 mm (0.168 in.) from the sensor's reference plane. Measured physically is the total photocurrent, Ipt, which consists of a signal (reflected from target) component, Ipr, and a component induced by reflections internal to the sensor (stray), Ips. Ipr = Ipt - Ips.
7. <Q> = Ipr/Ipt
8. Photocurrent variation with temperature follows a natural exponential law: Ip(T) = Ip(To)*exp[Ke(T-To)]
9. OSR size is defined as the distance for the 10%-90% "step" response of Ipr as the sensor moves over an abrupt black-white edge, or from opaque white to free space (no reflection).

Detector Electrical/Optical Characteristics @ T_A = 25°C

Parameter	Symbol	HEDS-	Min.	Typ.	Max.	Units	Conditions	Fig.	Notes
Dark Current	Id	1200		50	1000	pA	Vd = 5 V, If = 0 Reflection = 0%		
		1300		50	1000	pA			
Capacitance	Cd	1200		100		pF	Vd = 0 V, If = 0 f = 1 MHz		
		1300		100		pF			
Detector Area	Ad	1200		0.16		sq-mm	Square, with length = 0.4 mm per side		
		1300		0.16		sq-mm			

Emitter Electrical/Optical Characteristics @ T_A = 25°C

Parameter	Symbol	HEDS-	Min.	Typ.	Max.	Units	Conditions	Fig.	Notes
Forward Voltage	Vf	1200		1.48	1.7	V	If = 35 mA	3	
		1300		1.6	1.8	V		3	
Reverse Break-down Voltage	BVR	1200	2.5			V	Ir = 100 µA		
		1300	5.0			V			
Thermal Co-efficient of Vf	ΔVf/ΔT	1200		-0.91		mV/°C	If = 35 mA		
		1300		-1.2		mV/°C			
Peak Wavelength	λ	1200	805	820	835	nm	If = 35 mA	5	
		1300	680	700	720	nm		5	
Emitting Area	Ae	1200		0.0062		sq-cm	0.0889 mm diameter junction (0.0035 in.)		
		1300		0.0285		sq-cm	0.185 mm diameter junction (0.0073 in.)		

Bin Table

Ipr Limits (nA)		
Bin #	**Min.**	**Max.**
2	150	200
3	195	245
4	240	293
5	288	355
6	350	430
7	425	520
8	515	650

Product Marking

The photocurrent binning of the sensor is included in the 8-digit code printed on the sensor can. The last digit in the code represents the bin number.

See Figure 8 for suggestions in the application of photocurrent bins.

Test algorithm bins units to the lowest bin number if a unit is in the overlap region. Such units can cross bin boundaries as temperature changes. (Ambient temperature affects LED efficiency slightly and may cause several percent changes in Ipr). Bin numbers are for "reference only" and do not constitute an absolute guarantee.

The output of all LEDs degrades with time, depending on drive conditions and temperature.

The entire available distribution of parts, appropriately marked, will be shipped. Single bin orders cannot be supplied.

HEDS-1200 Optical System

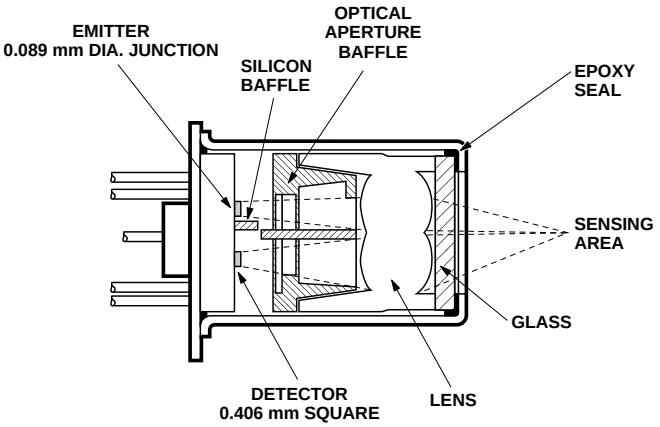

HEDS-1300 Optical System

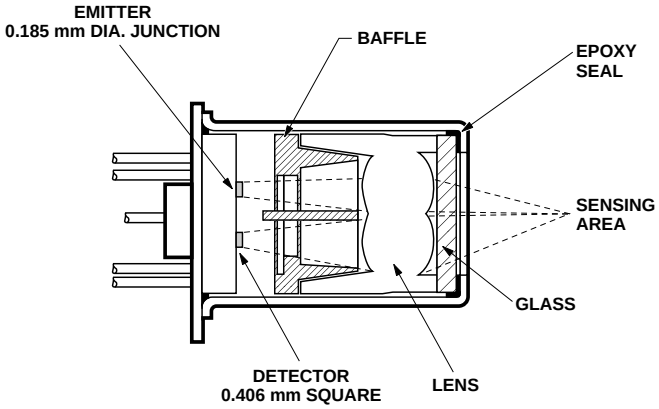

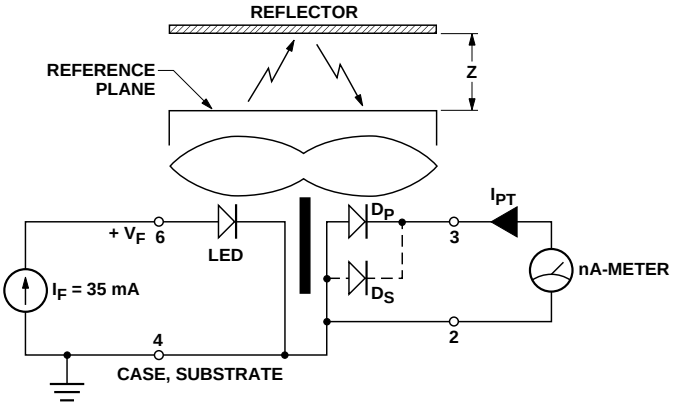

Figure 1A. HEDS-1200 Photocurrent Test Circuit.

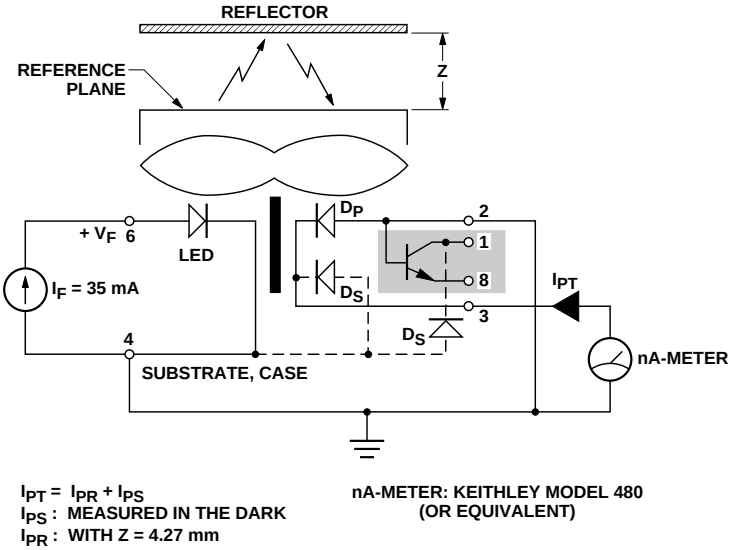

$I_{PT} = I_{PR} + I_{PS}$
I_{PS} : MEASURED IN THE DARK
I_{PR} : WITH Z = 4.27 mm

nA-METER: KEITHLEY MODEL 480
(OR EQUIVALENT)

Figure 1B. HEDS-1300 Photocurrent Test Circuit.

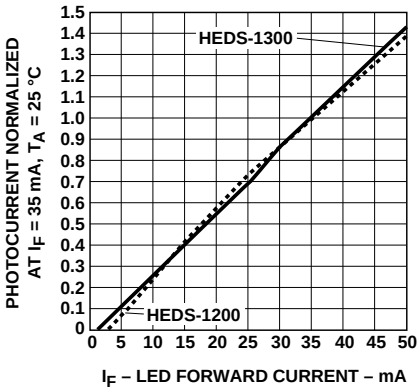

Figure 2. Relative Reflected Photocurrent.

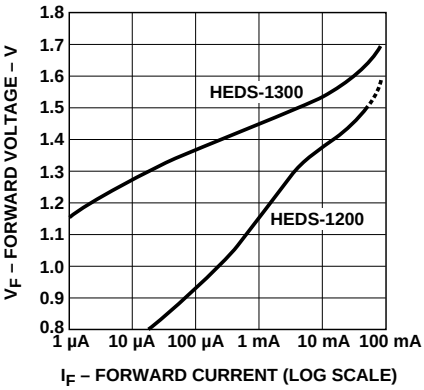

Figure 3. LED Forward Voltage vs. Forward Current.

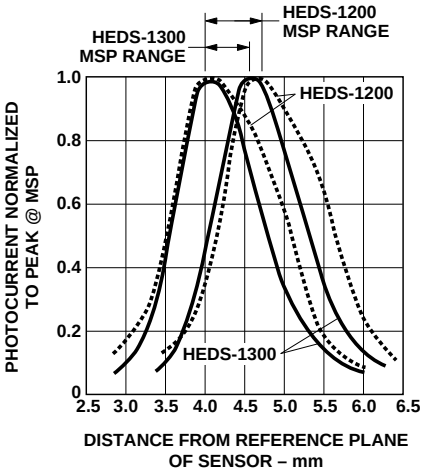

Figure 4. Photocurrent Variation with Distance.

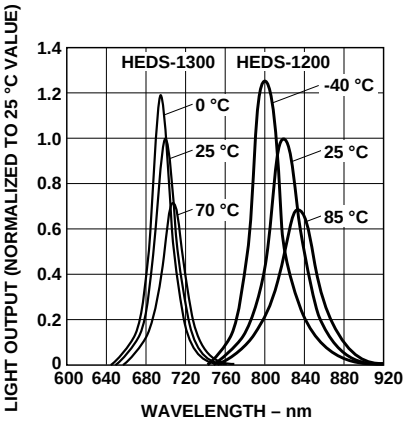

Figure 5. Typical Spectral Distribution of LEDs.

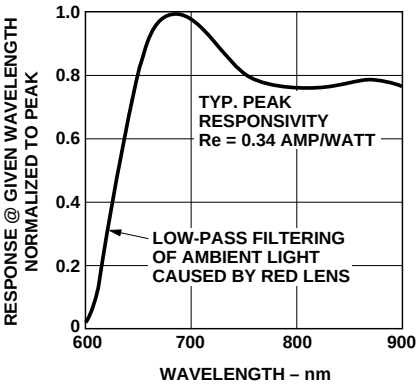

Figure 6. Relative Spectral Response of HEDS-1200 and HEDS-1300 Sensors.

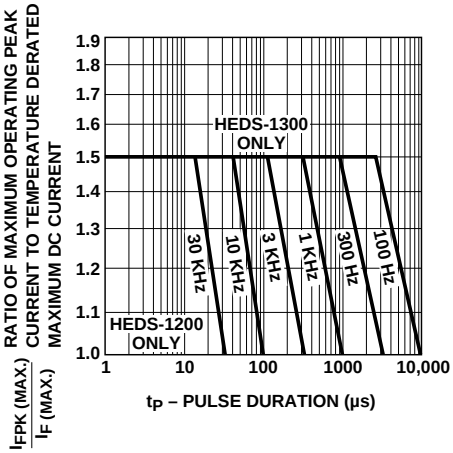

Figure 7. Sensor Pulse Drive Considerations. Max Tolerable Peak Pulse Current vs. Pulse Duration.

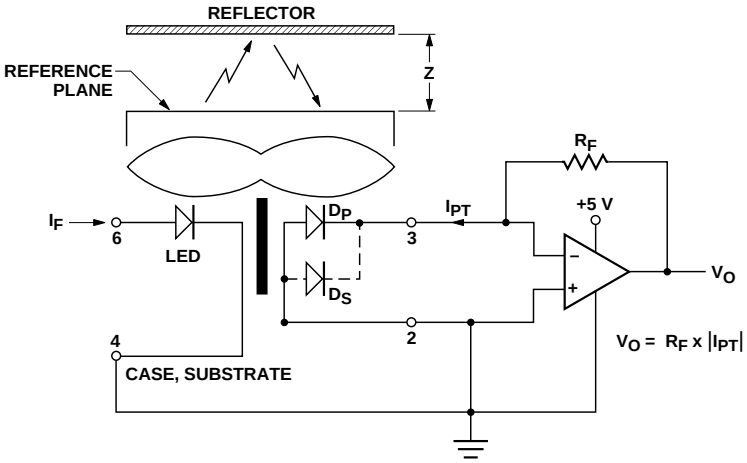

NOTE: FOR V_O (APPROX.) 1.9 – 2.4 VOLTS

SENSOR BIN NUMBER	RECOMMENDED VALUE OR R_F (OHMS)
2	15 M
3	12 M
4	10 M
5	8.2 M
6	6.8 M
7	5.6 M
8	4.7 M

Figure 8. Sensor with Transimpedance Amplifier.

Preferred Orientation

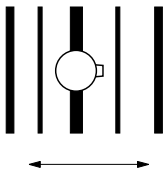

At maximum signal point (MSP) and/or when the sensor is in focus, the orientation of the sensor is unimportant. However, as one moves away from MSP and/or moves out of focus (either by distance or angle), the preferred orientation indicated above is recommended to maintain a higher resolution spot size.

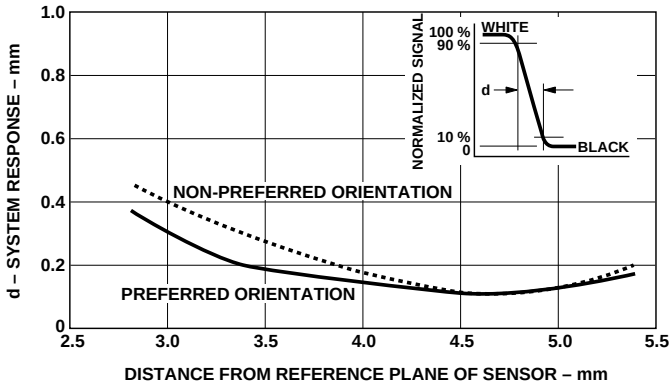

Figure 9A. HEDS-1200 System Optical Step Response Variation with Distance.

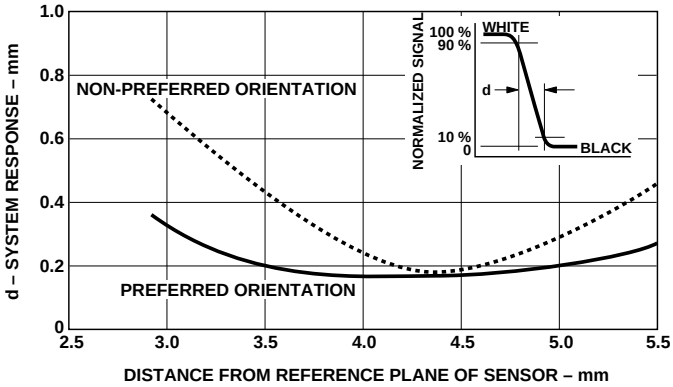

Figure 9B. HEDS-1300 System Optical Step Response Variation with Distance.

Warranty and Service

HP Optical Reflective Sensor is warranted for a period of one year after purchase covering defects in material and workmanship. Hewlett-Packard will repair or, at its option, replace products that prove to be defective in material or workmanship under proper use during the warranty period.

NO OTHER WARRANTIES ARE EXPRESSED OR IMPLIED, INCLUDING BUT NOT LIMITED TO THE IMPLIED WARRANTIES OF MERCHANTABILITY AND FITNESS FOR A PARTICULAR PURPOSE. HEWLETT-PACKARD IS NOT LIABLE FOR CONSEQUENTIAL DAMAGES.

For additional warranty or service information please contact your local Hewlett-Packard sales representative or authorized distributor.