查询HV826供应商 捷多邦，专业PCB打样工厂，24小时加急出货

High Voltage EL Lamp Driver

Ordering Information

Device	Package Options		
	MSOP-8	SO-8	Die
HV826	HV826MG*	HV826LG	HV826X

* Product supplied on 2500 piece carrier tape reels.

Features

- 1.8V to 3.5V operating supply voltage
- DC to AC conversion
- Adjustable output frequency
- Adjustable switch frequency
- Output voltage regulation
- Enable/disable function

Applications

- Mobile cellular phones
- Pagers
- Portable Transceivers
- Remote Control Units
- Calculators

General Description

The Supertex HV826 is a high voltage driver designed for driving EL lamps. The input supply voltage range is from 1.8V to 3.5V. The device uses a single inductor and a minimum number of passive components. The nominal regulated output voltage that is applied to the EL lamp is ±80V. The chip can be enabled/disabled by connecting the resistor on $R_{SW\text{-}OSC}$ to V_{DD}/ground.

The HV826 has two internal oscillators, a switching MOSFET, and a high voltage EL lamp driver. The frequency for the switching MOSFET is set by an external resistor connected between the $R_{SW\text{-}osc}$ pin and the supply pin V_{DD}. The EL lamp driver frequency is set by an external resistor connected between $R_{EL\text{-}osc}$ pin and the V_{DD} pin. An external inductor is connected between the L_X and V_{DD} pins. A 0.01-0.1µF capacitor is connected between C_S and ground. The EL lamp is connected between V_A and V_B.

The switching MOSFET charges the external inductor and discharges it into the capacitor at C_S. The voltage at C_S will start to increase. Once the voltage at C_S reaches a nominal value of 80V, the switching MOSFET is turned OFF to conserve power. The outputs V_A and V_B are configured as an H bridge and are switching in opposite states to achieve 160V peak-to-peak across the EL lamp.

Absolute Maximum Ratings*

Supply Voltage, V_{DD}	-0.5V to +4.5V
Output Voltage, V_{Cs}	-0.5V to +100V
Operating Temperature Range	-25° to +85°C
Storage Temperature Range	-65°C to +150°C
MSOP-8 Power Dissipation	250mW
SO-8 Power Dissipation	400mW

Note:
*All voltages are referenced to GND.

Pin Configuration

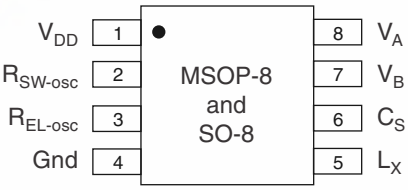

Top View

Supertex Inc. does not recommend the use of its products in life support applications and will not knowingly sell its products for use in such applications unless it receives an adequate "products liability indemnification insurance agreement." Supertex does not assume responsibility for use of devices described and limits its liability to the replacement of devices determined to be defective due to

Electrical Characteristics

DC Characteristics (Over recommended operating conditions unless otherwise specified, T_A=25°C)

Symbol	Parameter	Min	Typ	Max	Units	Conditions
$R_{DS(on)}$	On-resistance of switching transistor			7.0	Ω	I=100mA
V_{Cs}	Max. output regulation voltage	75	80	85	V	V_{DD}=1.8V to 3.5V
V_{A-B}	Max. of differential output voltage across lamp	150	160	170	V	V_{DD}=1.8V to 3.5V
I_{DDQ}	Quiescent V_{DD} supply current			100	nA	R_{SW-osc} = Low
I_{DD}	Input current going into the V_{DD} pin			150	µA	V_{DD}=1.8V to 3.5V. See Figure 1.
I_{IN}	Input current including inductor current		35	45	mA	V_{IN}=1.5V. See Figure 1.
V_{CS}	Output voltage on V_{CS}	65	70		V	V_{IN}=1.5V. See Figure 1.
f_{EL}	V_{A-B} output drive frequency	300	375	450	Hz	V_{IN}=1.5V. See Figure 1.
f_{SW}	Switching transistor frequency		80		KHz	V_{IN}=1.5V. See Figure 1.
D	Switching transistor duty cycle		88		%	See figure 1.

Recommended Operating Conditions

Symbol	Parameter	Min	Typ	Max	Units	Conditions
V_{DD}	Supply voltage	1.8		3.5	V	
f_{EL}	V_{A-B} output drive frequency	60		1000	KHz	
T_A	Operating temperature	-25		85	°C	

Enable/Disable Function Table

Symbol	Parameter	Min	Typ	Max	Units	Conditions
EN-L	Logic input low voltage	0		0.5	V	V_{DD}=1.8V to 3.5V
EN-H	Logic input high voltage	V_{DD}-0.5		V_{DD}	V	V_{DD}=1.8V to 3.5V

Block Diagram

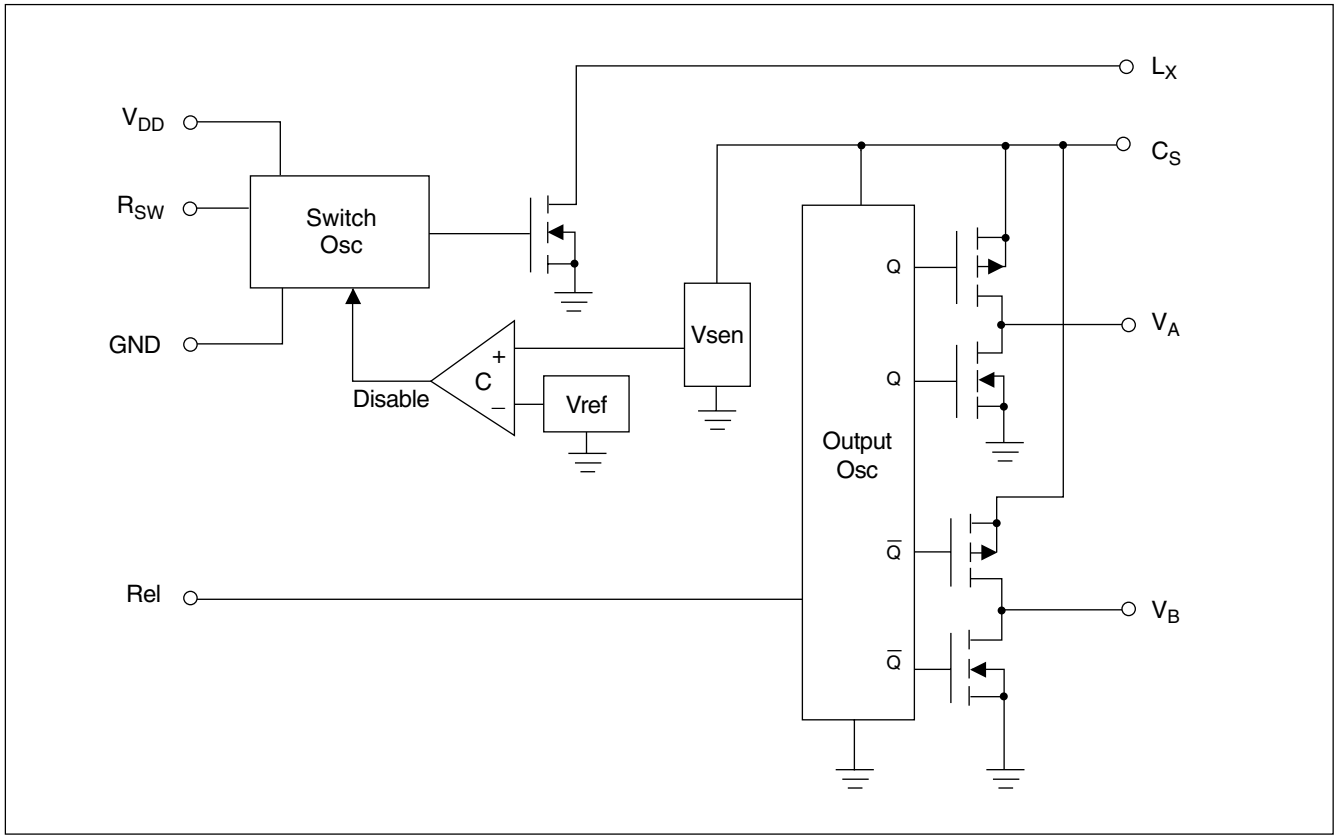

Figure 1: Typical Application

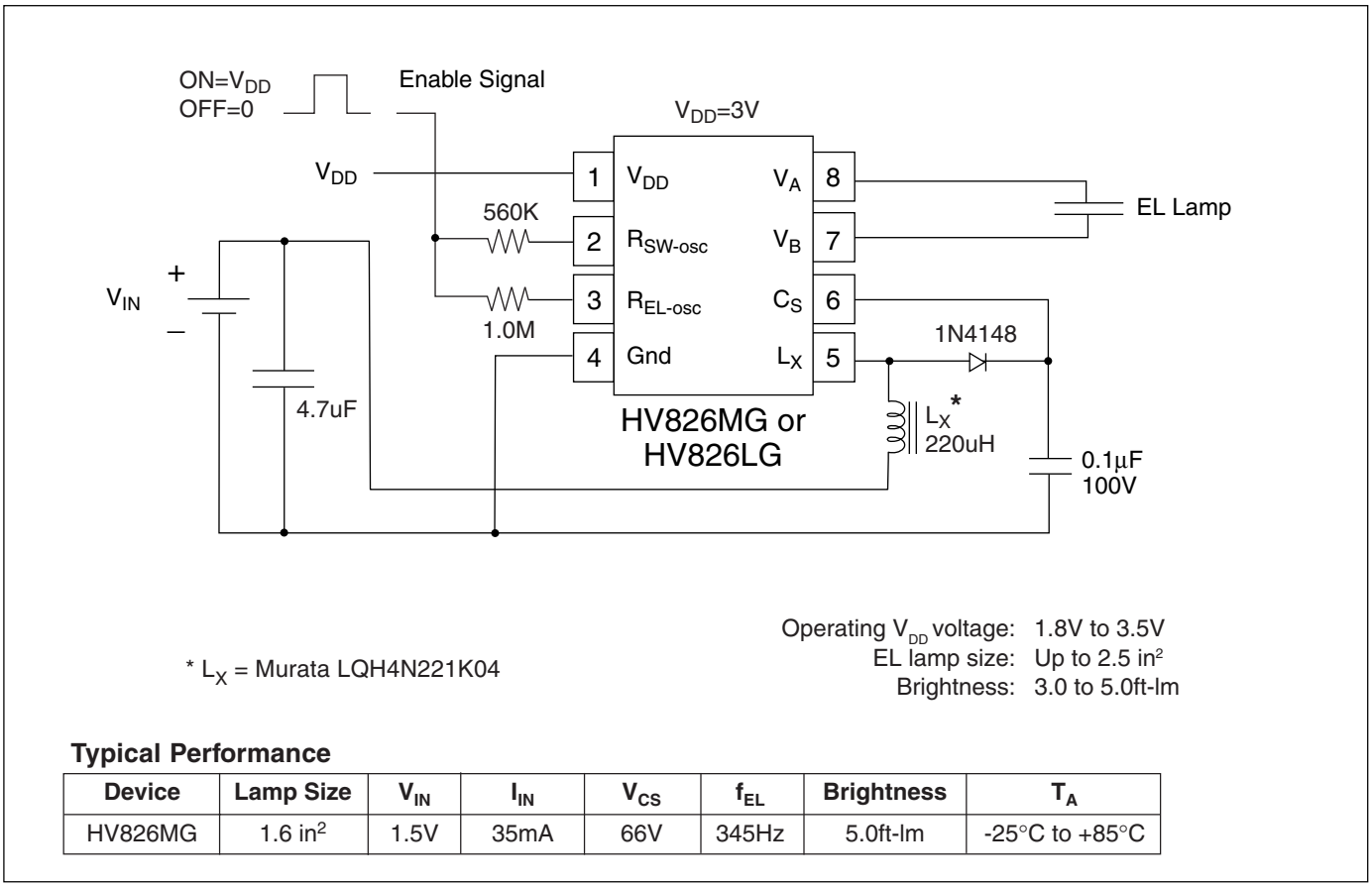

Operating V_{DD} voltage: 1.8V to 3.5V
EL lamp size: Up to 2.5 in²
Brightness: 3.0 to 5.0ft-lm

* L_X = Murata LQH4N221K04

Typical Performance

Device	Lamp Size	V_{IN}	I_{IN}	V_{CS}	f_{EL}	Brightness	T_A
HV826MG	1.6 in²	1.5V	35mA	66V	345Hz	5.0ft-lm	-25°C to +85°C

Typical Performance Curves for Figure 1 (1.6 in.^{2} lamp)

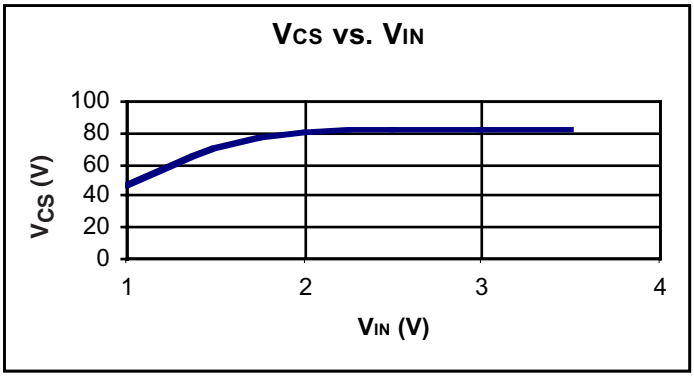

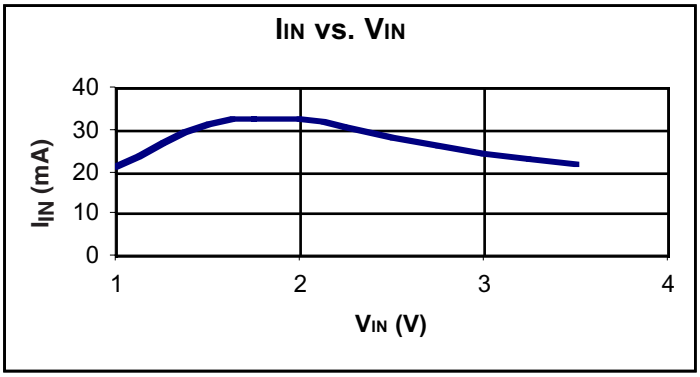

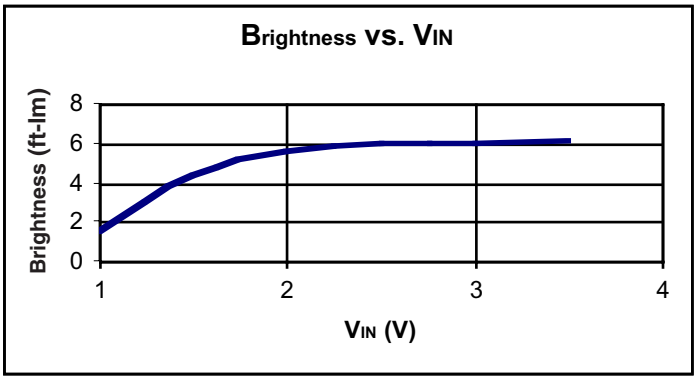

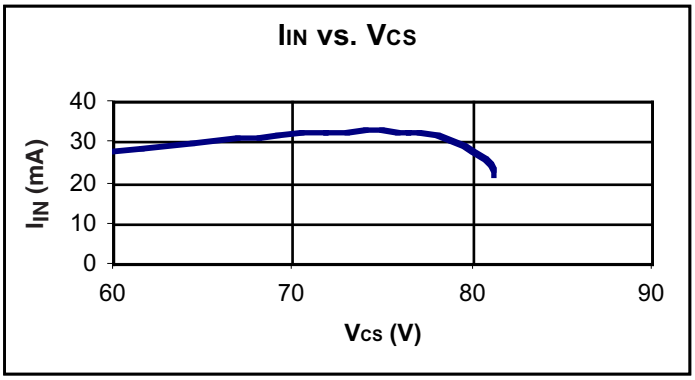

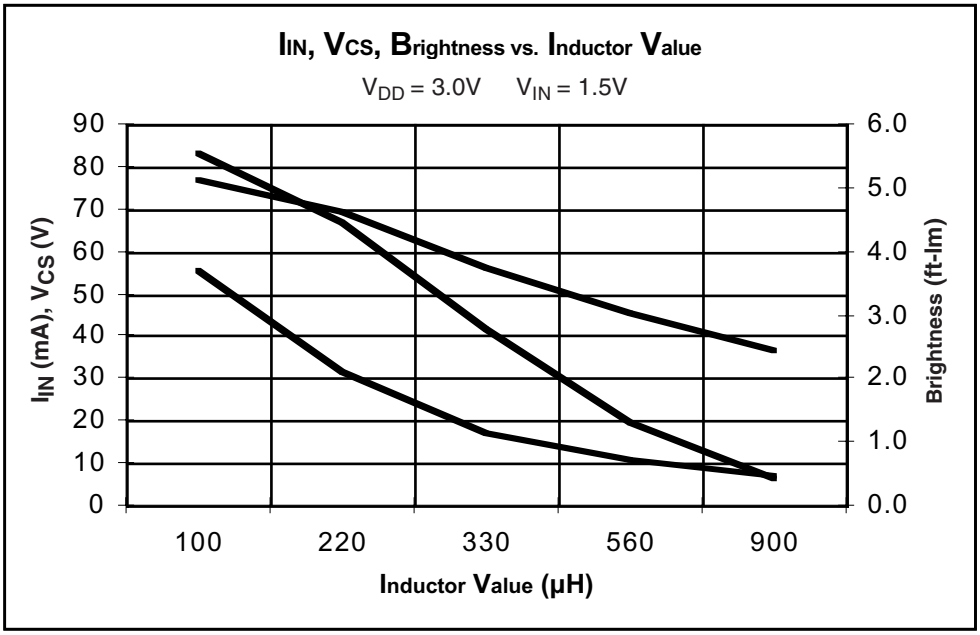

Figure 2: Typical Application

Figure 2: V_{IN}=3.0V=V_{DD}

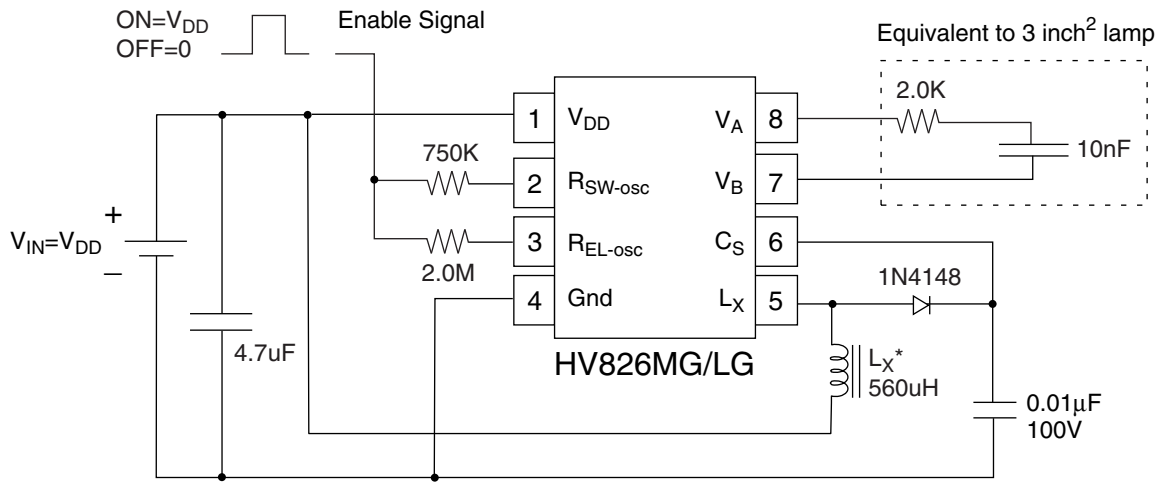

* L_X = Murata LQH4N561K04

Operating V_{DD} voltage: 1.8V to 3.5V
EL lamp size: Up to 4.5 in²
Brightness: 3.0 to 5.0ft-lm

Typical Performance

Device	Lamp Size	V_{DD}	I_{DD}	V_{CS}	f_{EL}	Brightness	T_A
HV826MG	3.0 in²	3.0V	23mA	80V	195Hz	4.0ft-lm	-25°C to +85°C

Typical Performance Curves for Figure 2 (3.0 in.^{2} lamp)

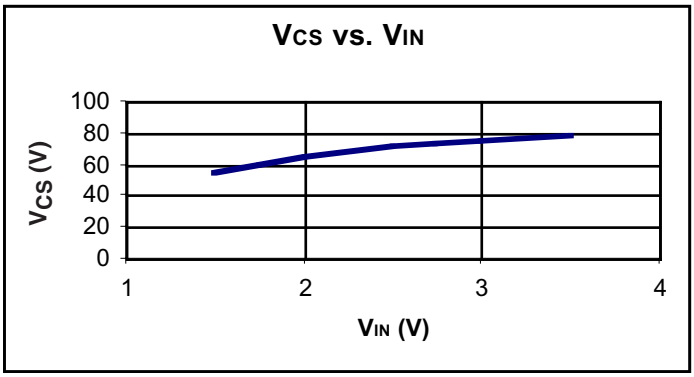

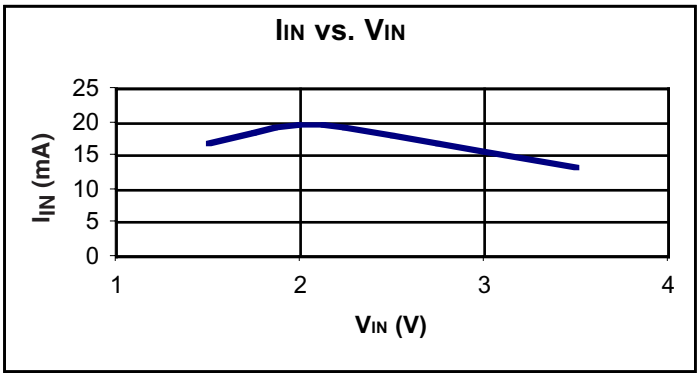

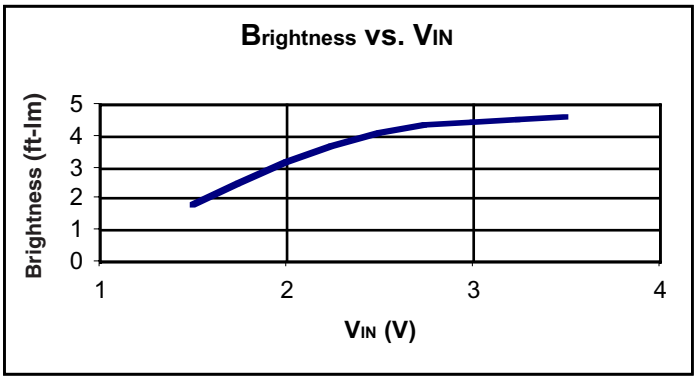

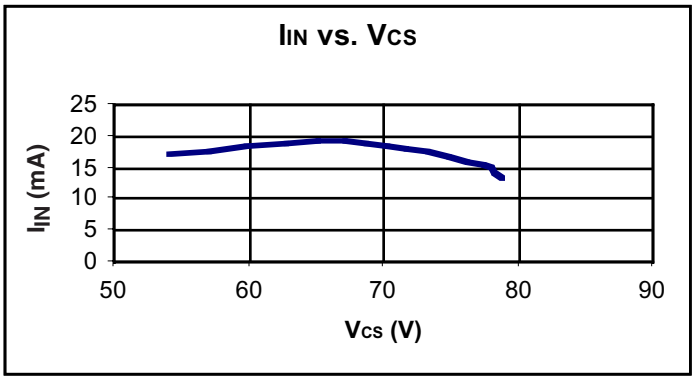

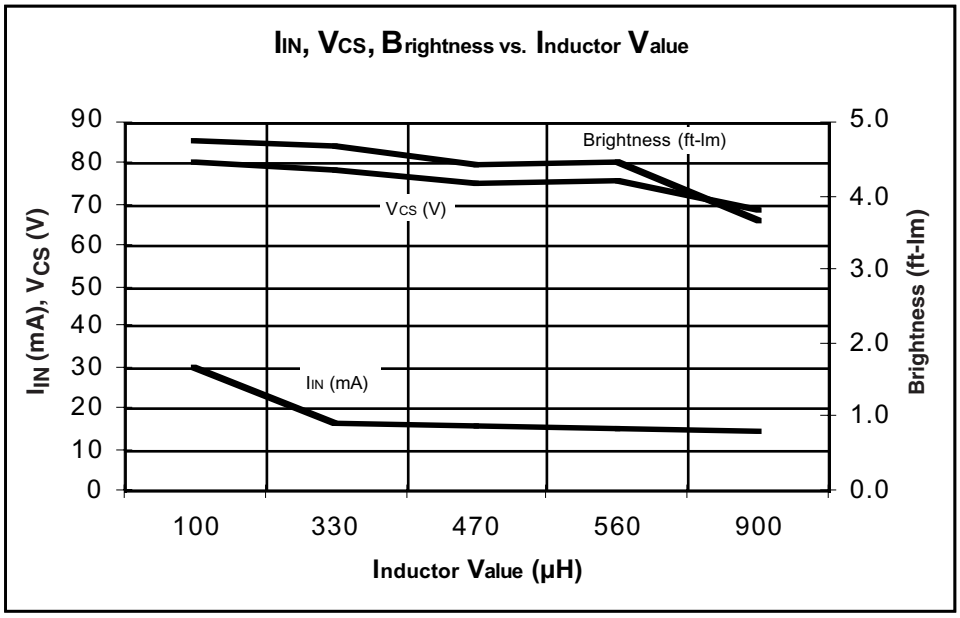

Supertex inc.
1235 Bordeaux Drive, Sunnyvale, CA 94089