查询SI4720CY供应商 捷多邦，专业PCB打样工厂，24小时加急出货

Battery Disconnect Switch

FEATURES

- Solution for Bi-Directional Blocking Bi-Directional Conduction Switch
- 6- to 30-V Operation
- Ground Referenced Logic Level Inputs
- Integrated Low $r_{DS(on)}$ MOSFET
- Level-Shifted Gate Drive with Internal MOSFET
- Two Independent Inputs
- Ultra Low Power Consumption in Off State (Leakage Current Only)
- Logic Supply Voltage is Not Required

DESCRIPTION

The Si4720CY is two level-shifted p-channel MOSFETs. Operating together, these MOSFETs can be used as a reverse blocking switch for battery disconnect applications. It is a solution for multiple battery technology designs or designs that require isolation from the power bus during charging.

The Si4720CY is available in a 16-pin SOIC package and is rated for the commercial temperature range of –25 to 85°C.

FUNCTIONAL BLOCK DIAGRAM

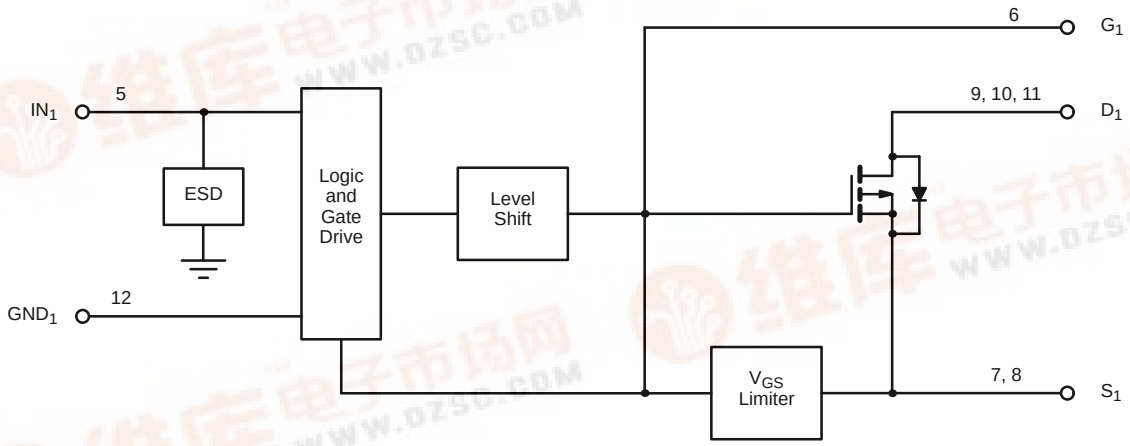

Half a circuit shown here.

找PDF 维库一下 pdf.dzsc.com

ABSOLUTE MAXIMUM RATINGS

Voltage Referenced to GND

V_S, V_D[a] . . . . . –0.3 V to 32 V
V_{SD} . . . . . –0.3 V to 30 V
V_{IN1}, V_{IN2} . . . . . –0.3 V to 15 V
V_{GS} . . . . . 20 V

Storage Temperature . . . . . –55 to 150°C
Power Dissipation[b] (t = 10 sec) . . . . . 2.5 W
(t = steady state) . . . . . 1.5 W

Notes
a. $V_{SD} \leq 30\ V_{DC}$
b. Device mounted with all leads soldered to 1" x 1" FR4 with laminated copper PC board.

Stresses beyond those listed under "Absolute Maximum Ratings" may cause permanent damage to the device. These are stress ratings only, and functional operation of the device at these or any other conditions beyond those indicated in the operational sections of the specifications is not implied. Exposure to absolute maximum rating conditions for extended periods may affect device reliability.

RECOMMENDED OPERATING RANGE

V_S, V_D . . . . . 6 V to 30 V
V_{IN1}, V_{IN2} . . . . . 0 V to 13.2 V
I_{DS} . . . . . 0 A to 6 A

Operating Temperature Range . . . . . –25 to 85°C
Junction Temperature . . . . . –25 to 150°C

SPECIFICATIONS

Parameter	Symbol	Test Conditions Unless Otherwise Specified	Limits				Unit
			Temp[a]	Min[b]	Typ[c]	Max[b]	
On-Resistance	r_{DS}	V_S = 10 V, I_D = 1 A, V_{IN} = H	Room		0.0155	0.020	Ω
Leakage Current	$I_{DS(off)}$	V_{DS} = 10 V	Room			1	μA
Supply Current	$I_{S(off)}$	V_S = 21 V	Room			1	μA
	$I_{S(on)}$		Room		1.1	6	μA
Input Voltage Low	V_{INL}	V_S = 10 V and V_S = 21 V	Full			1	V
Input Voltage High	V_{INH}		Full	2.5			V
Input Leakage Current	I_{INH}	V_{IN} = 5.0 V	Full			5	μA
Turn-On Delay (IN to D or S)	$t_{ON(IN)}$	V_S = 10 V, R_L = 5 Ω, Figure 1	Room	2.2	2.9	10	μs
Turn-Off Delay (IN to D or S)	$t_{OFF(IN)}$		Room		1.5	2.1	μs
Break-Before-Make[d]	t_{BBM}		Room		1.05		μs
Rise Time	t_{RISE}	V_S = 10 V, R_L = 5 Ω, Figure 1	Room		1.3	2.5	μs
Fall Time	t_{FALL}		Room		50	100	ns
Voltage Across Pin 6 and 7	V_{GS}	V_S = 30 V	Room		10.2	18	V
Forward Diode	V_{SD}	I_D = –1 A	Room			1.1	V

Notes
a. Room = 25°C, Full = as determined by the operating temperature suffix.
b. The algebraic convention whereby the most negative value is a minimum and the most positive a maximum.
c. Typical values are for DESIGN AID ONLY, not guaranteed nor subject to production testing.
d. Guaranteed by design, not subject to production testing.

TIMING DIAGRAMS

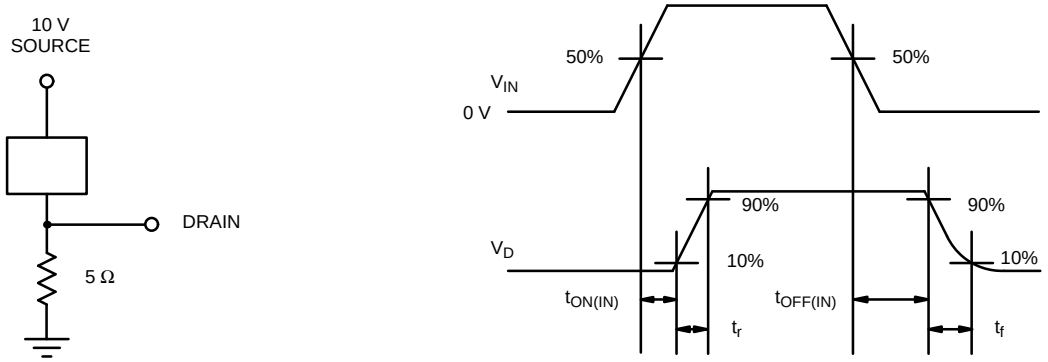

FIGURE 1.

PIN CONFIGURATION AND TRUTH TABLE

V_{IN1}	V_{IN2}	Switch 1	Switch 2
0	0	Off	Off
0	1	Off	On
1	0	On	Off
1	1	On	On

SO-16

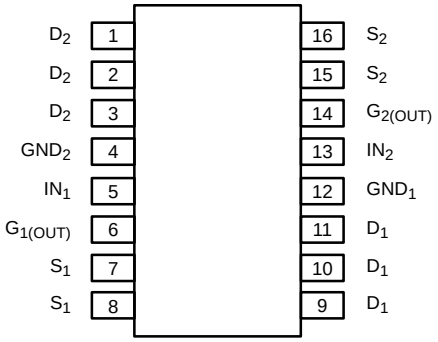

Top View

Order Number: Si4720CY

PIN DESCRIPTION (SUBJECT TO CHANGE)

Pin Number	Symbol	Description
1, 2, 3	D_2	Drain connection for MOSFET-2.
4, 12	GND	Ground
5	IN_1	Logic input, IN_1. High level turns on the switch.
6	$G_{1(OUT)}$	Gate output to MOSFET-1.
7, 8	S_1	Source connection for MOSFET-1
9, 10, 11	D_1	Drain connection for MOSFET-1.
13	IN_2	Logic input, IN_2. High level turns on the switch.
14	$G_{2(OUT)}$	Gate output to MOSFET-2.
15, 16	S_2	Source connection for MOSFET-2.

TYPICAL CHARACTERISTICS (25°C UNLESS NOTED)

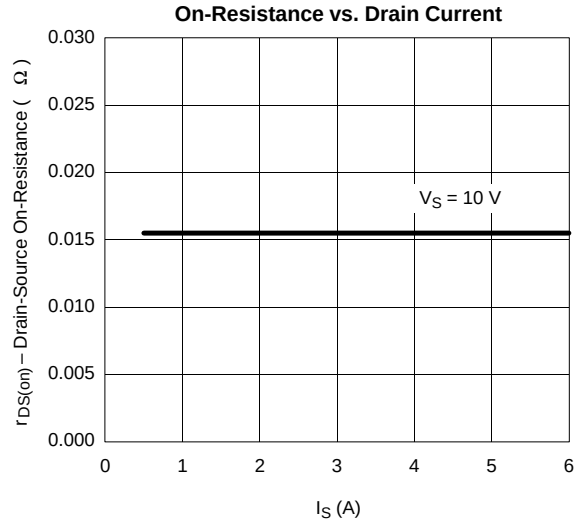

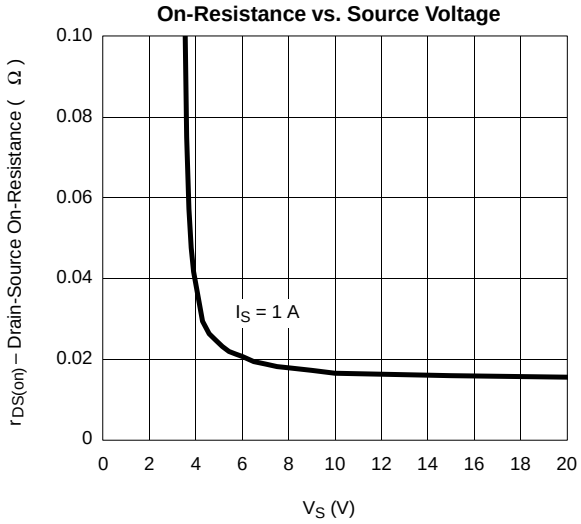

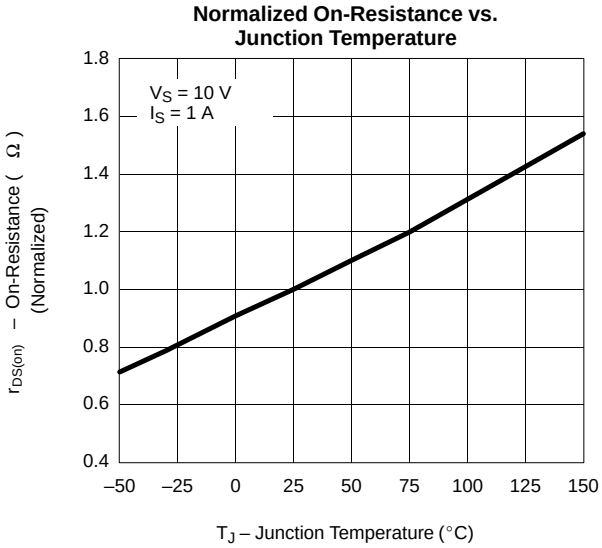

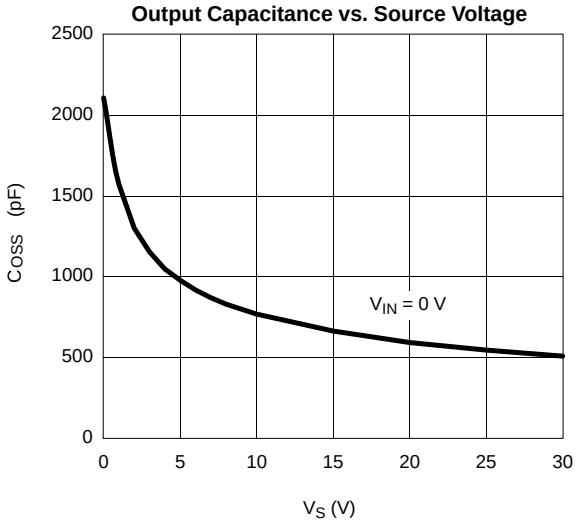

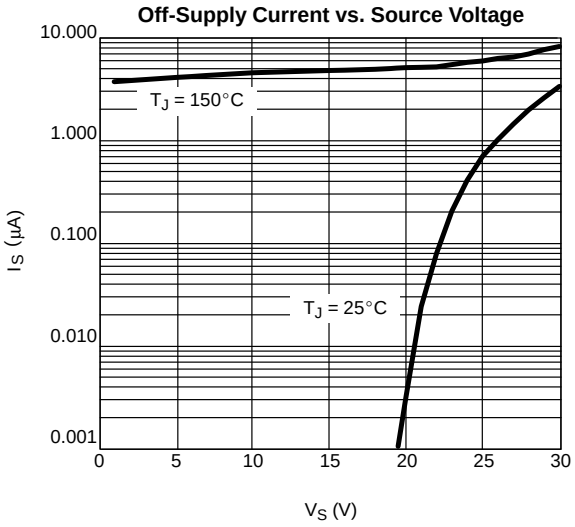

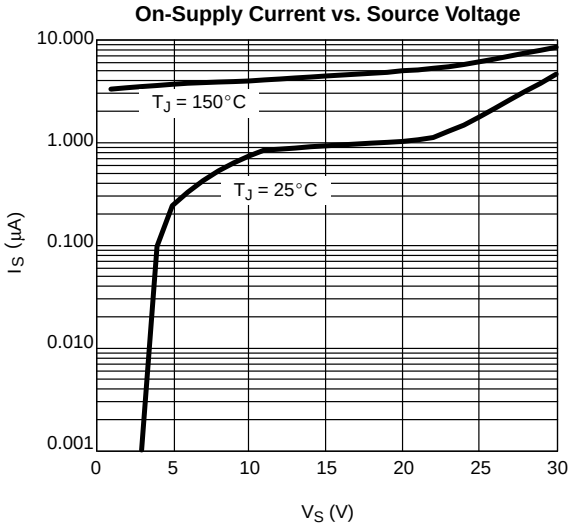

TYPICAL CHARACTERISTICS (25°C UNLESS NOTED)

Drain-Source Diode Forward Voltage

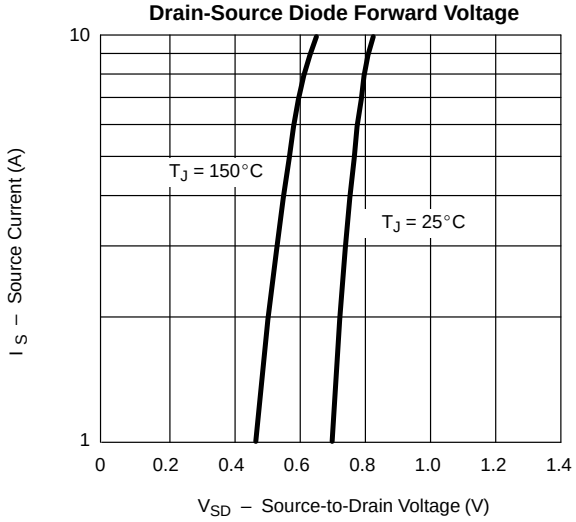

Input Voltage Trip Point vs. Temperature

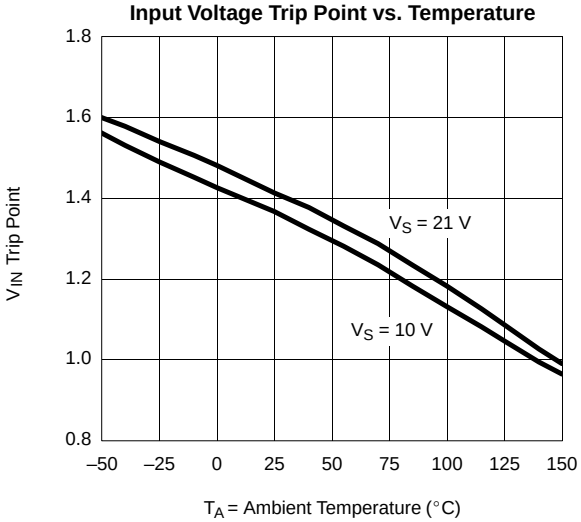

Turn-On Delay vs. Temperature

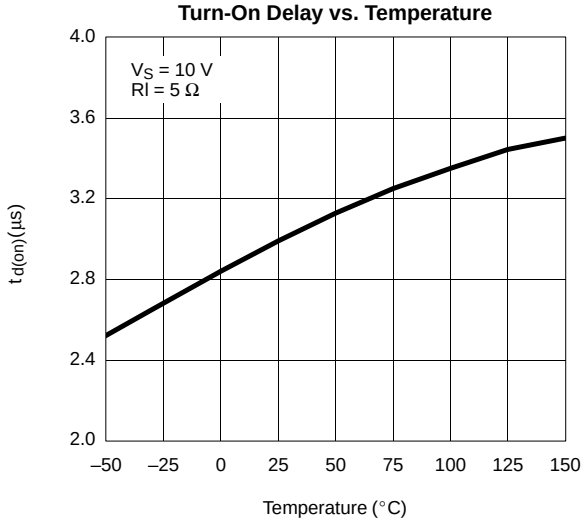

Turn-off Delay vs. Temperature

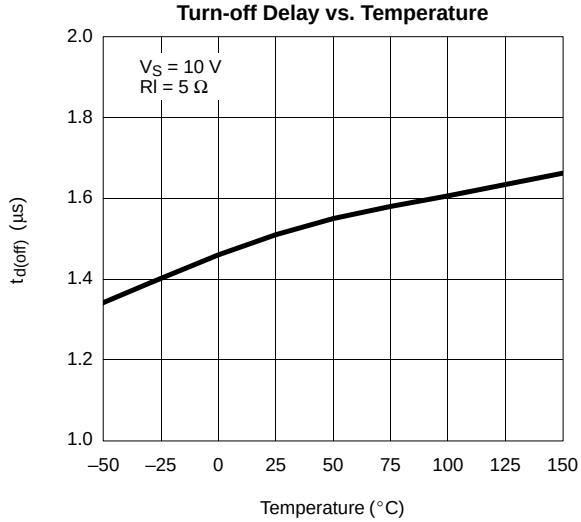

Rise Time vs. Temperature

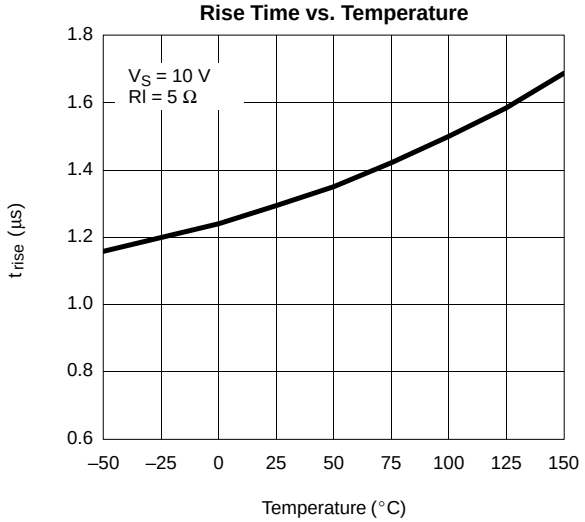

Fall Time vs. Temperature

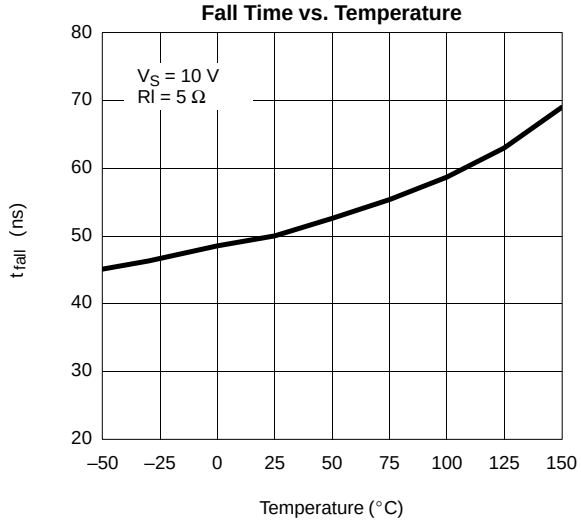

TYPICAL CHARACTERISTICS (25°C UNLESS NOTED)

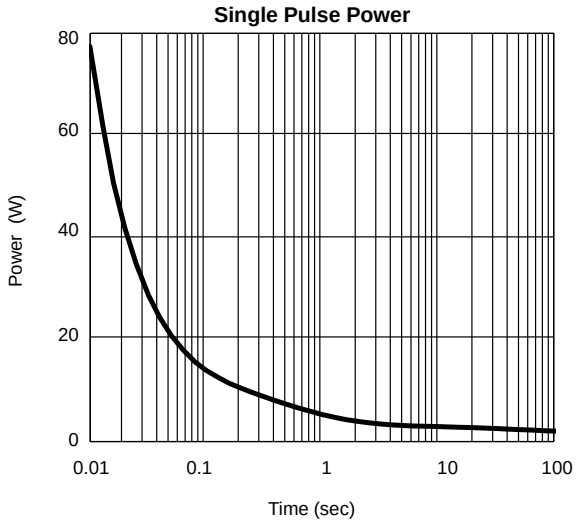

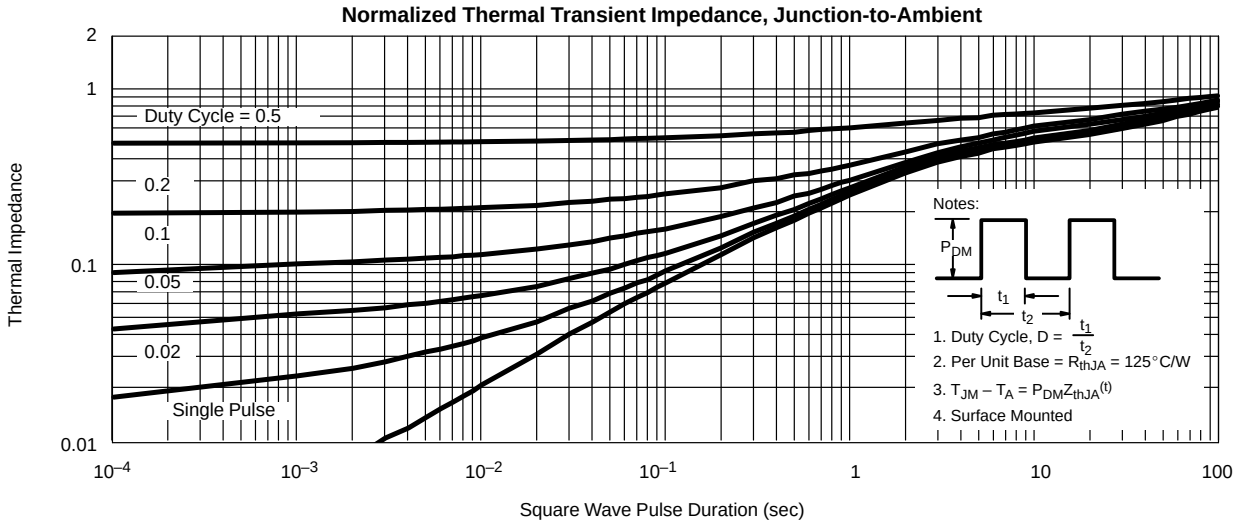

APPLICATION DRAWINGS

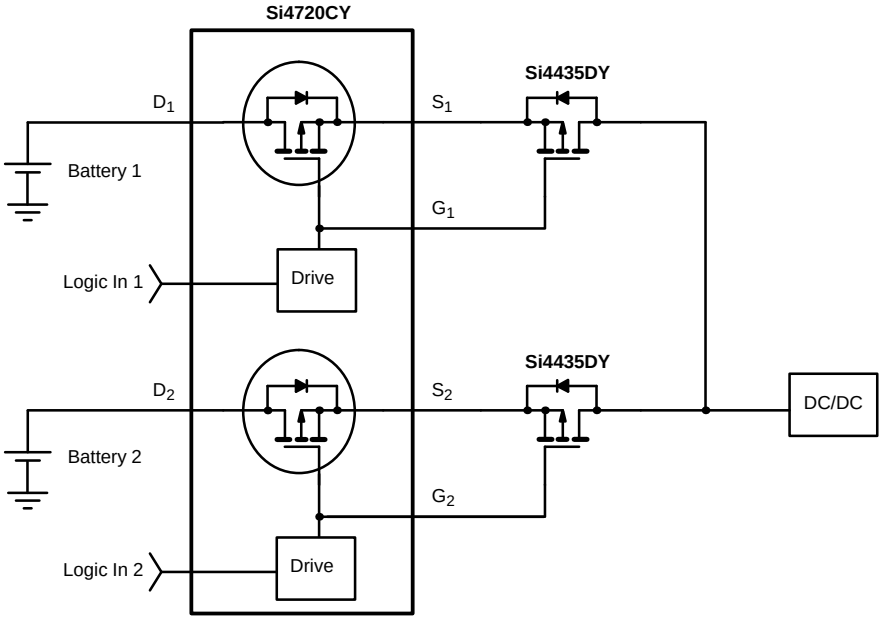

FIGURE 2.

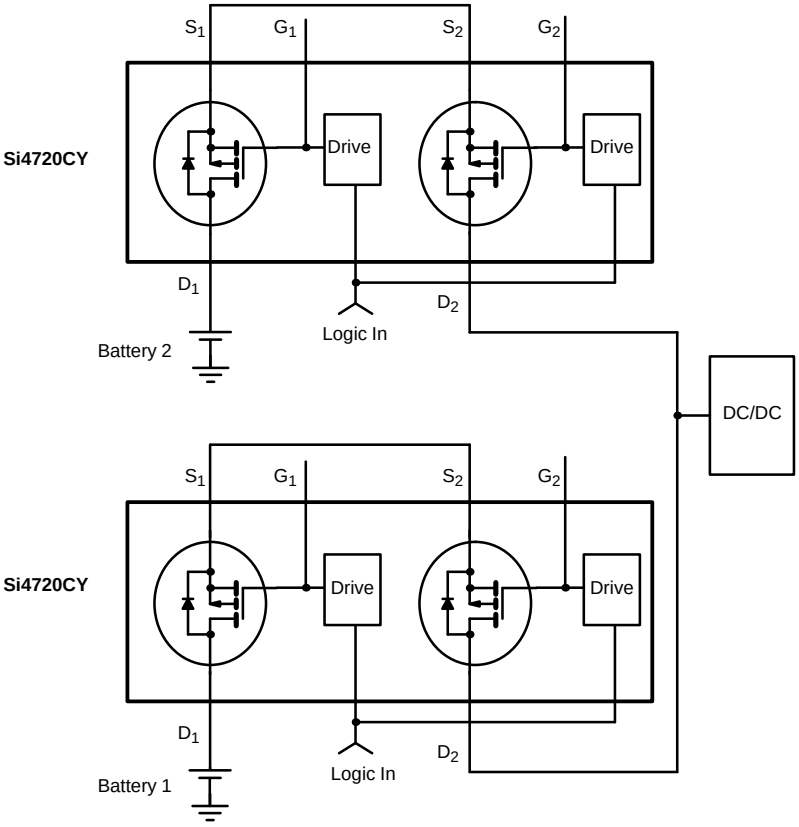

FIGURE 3.

APPLICATION DRAWINGS

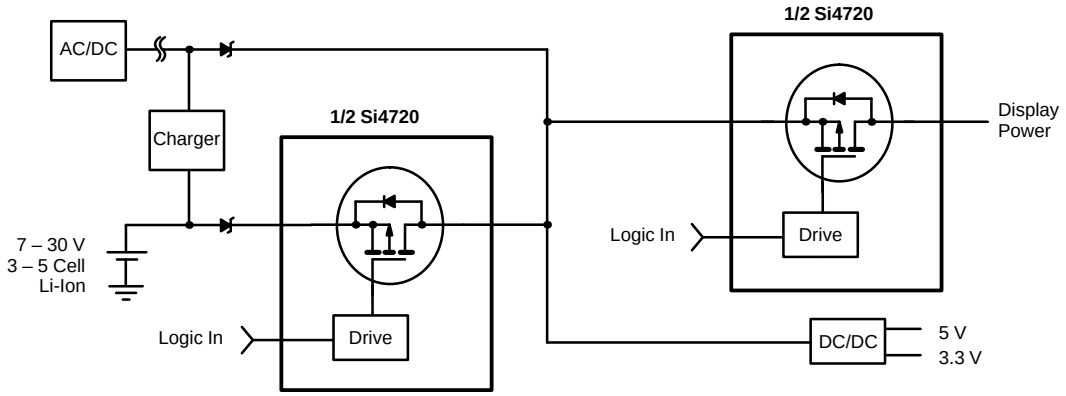

FIGURE 4. Low-Cost Laptop PC

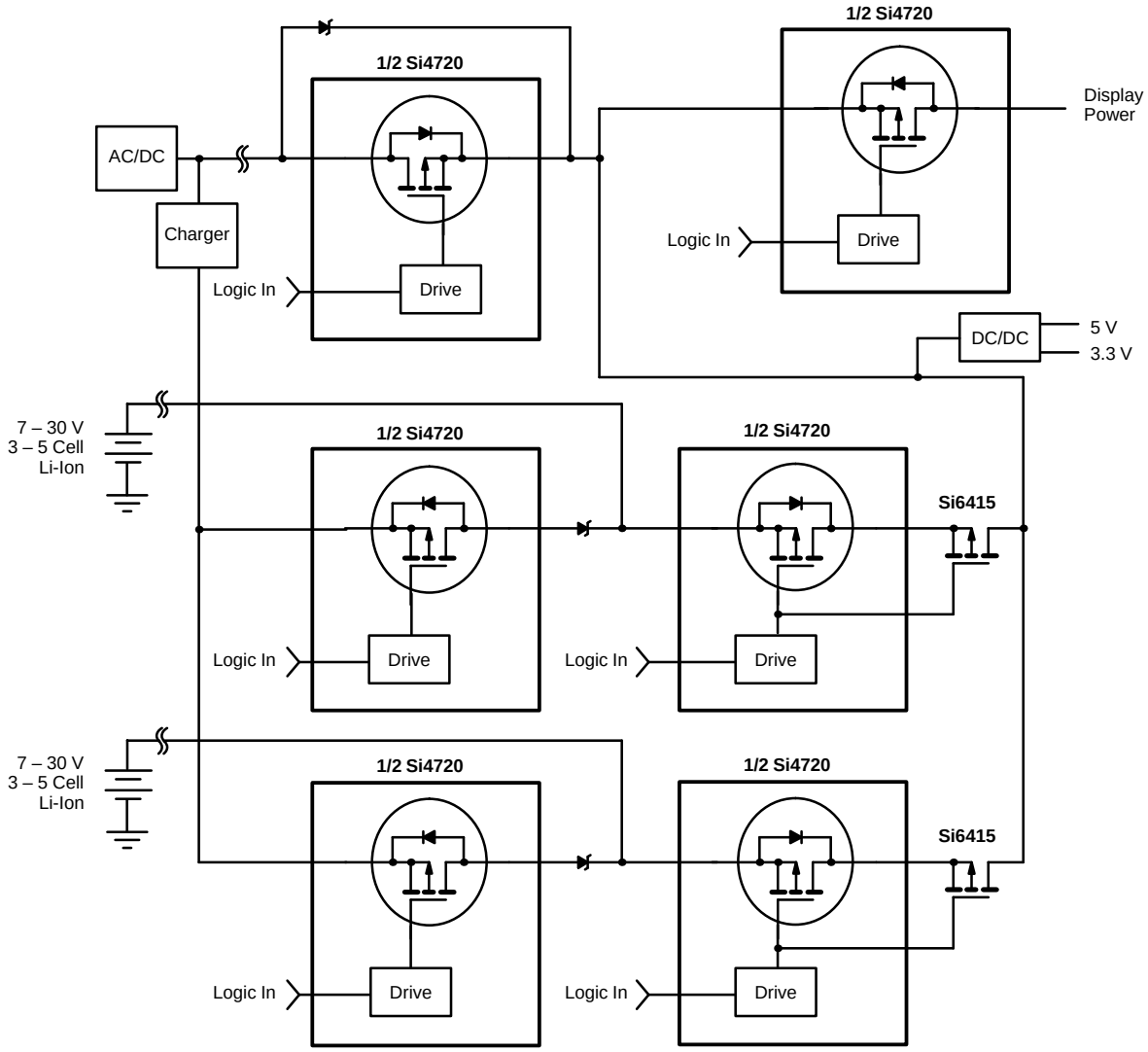

FIGURE 5. High-Performance Laptop PC