查询SI-7300A供应商 捷多邦，专业PCB打样工厂，24小时加急出货

SI-7300A and SI-7330A

■ Ratings

(Ta = 25°C)

Absolute maximum rating / Type No.	Supply voltage (V) V_{CC1}	Supply voltage (V) V_{CC2}	Output current (A) I_O	Junction temperature (°C) T_j	Operating ambient temperature (°C) T_{op}	Storage temperature (°C) T_{stg}
SI-7300A	48	8	1.7	+125	–20 to +80	–30 to +100
SI-7330A	42	8	3.2	+125	–20 to +80	–30 to +100

■ Characteristics

(Ta = 25°C)

Electrical characteristics / Type No.	Supply voltage (V) V_{CC1} min	typ	max	V_{CC2} min	typ	max	Output current (mA/ø) I_O min	max	I_{OM}* min	typ	max	V_{CC2} input current (mA) I_{CC2} max	Oscillation frequency (kHz) F min	typ	max	External zener diode breakdown voltage (V) V_Z min	max	Input excitation signal (active high): Input voltage (V) Low level (OFF) V_{IL} max	High level (ON) V_{IH} typ	High level input current (mA) I_O= 0.5A/ø I_{IH} min	max	I_O= 1.0A/ø I_{IH} min	max	I_O= 1.5A/ø I_{IH} min	max	I_O= 3.0A/ø I_{IH} min	max
SI-7300A	15	30	42	4.5	5	5.5	200	1500	535	580	625	45	19	21	25	V_{CC1} +5	70	0.8	2.8	2.2	10.0	3.0	10.0	4.9	10.0		
SI-7330A	15	30	35	4.5	5	5.5	200	3000	535	580	625	45	19	21	25	V_{CC1}	43	0.3	1.8	5	100			15	100	40	100

* Measurement conditions are as shown in the external connection diagram.

■ Block diagram

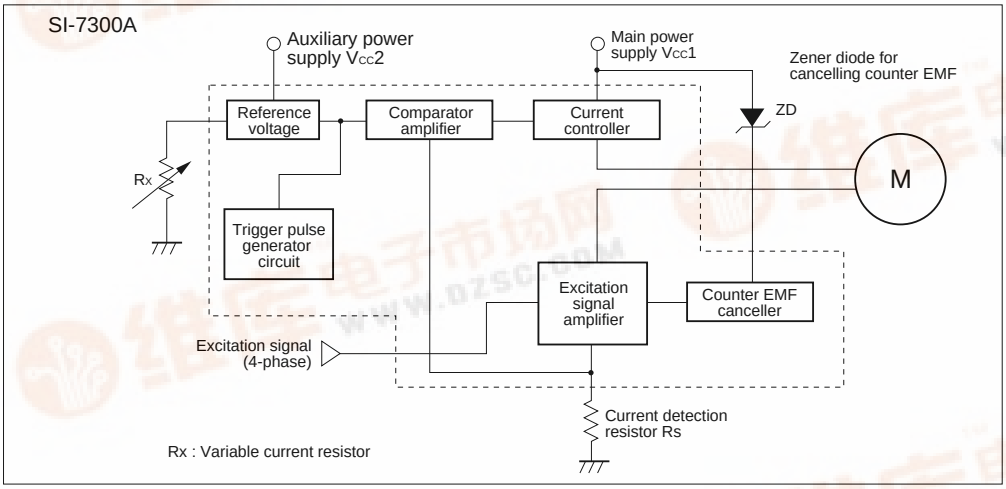

■ External connection diagram

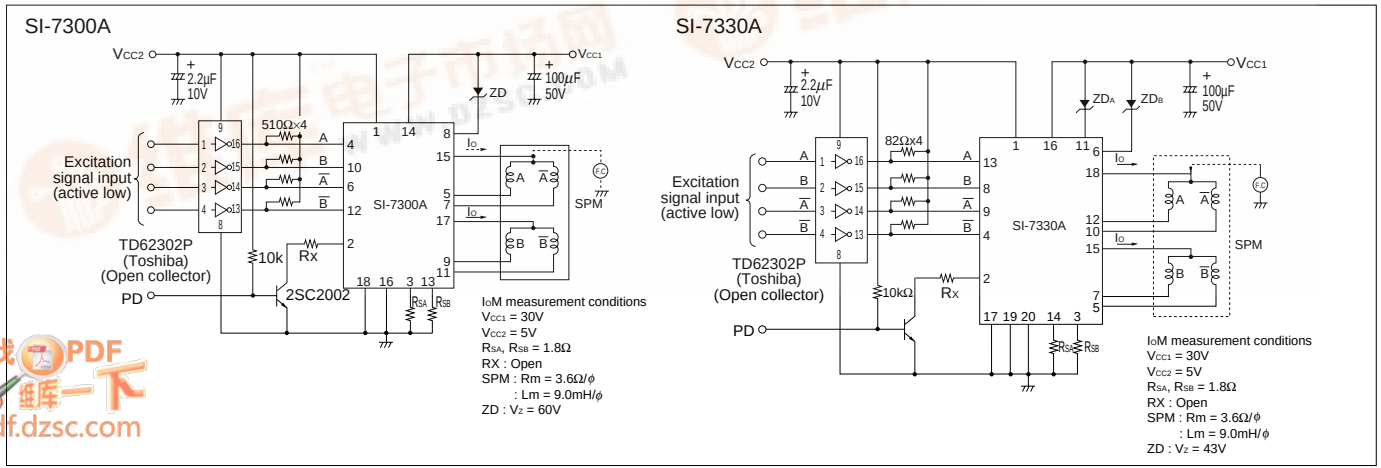

找PDF 维库一下 pdf.dzsc.com

■ Equivalent circuit diagram

SI-7300A

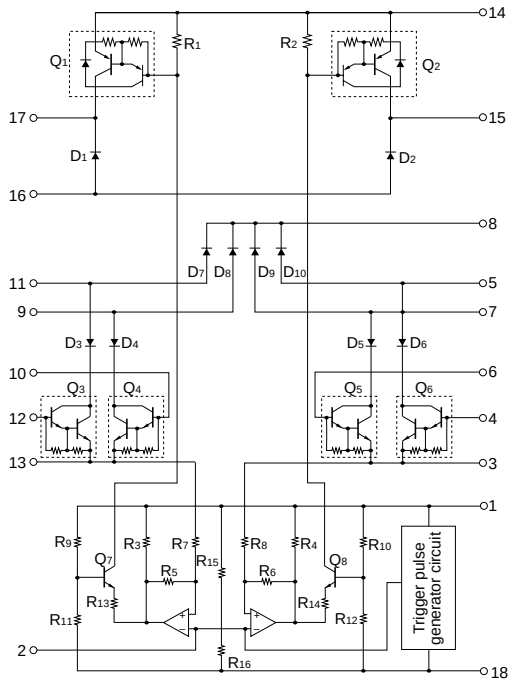

SI-7330A

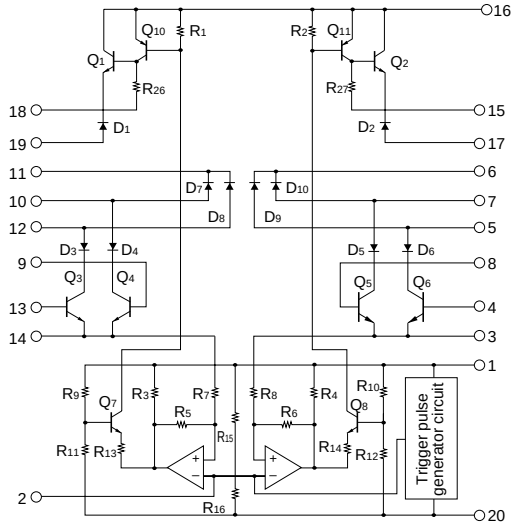

■ External dimensions (Unit: mm)

SI-7300A Plastic package

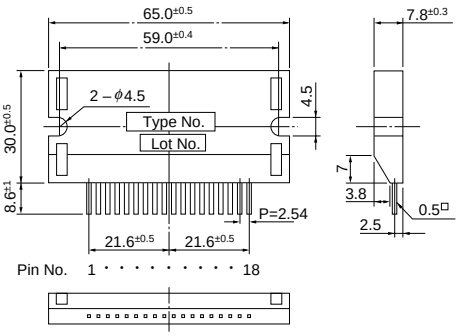

SI-7330A Plastic package

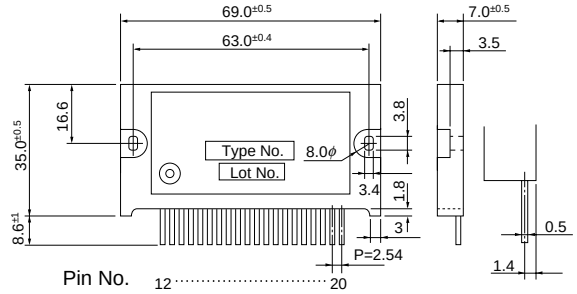

■ Supply voltage vs. Output current

SI-7300A

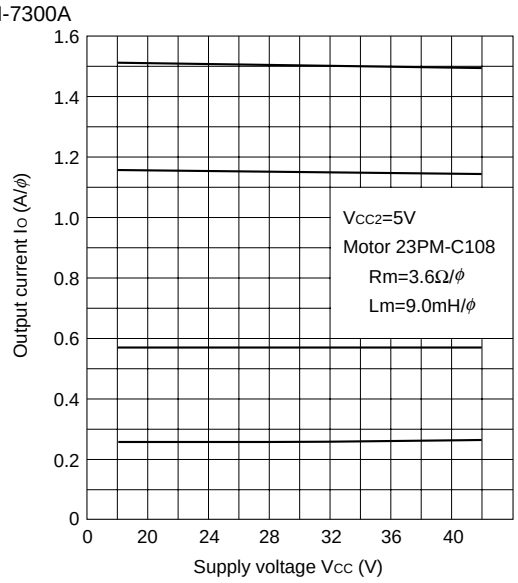

■ Case temperature vs. Output current

SI-7300A

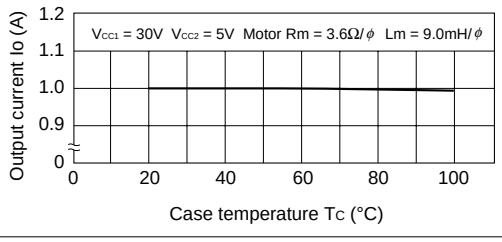

■ Case temperature vs. Chopping frequency

SI-7300A

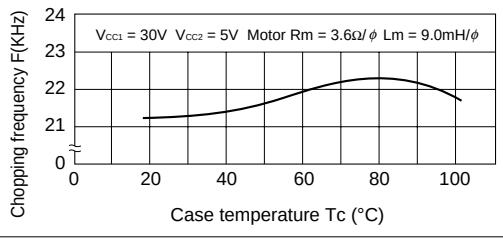

Application Note

■ Determining the output current Io (motor coil current)

The output current, Io is fixed by the following circuit elements:

R_S : Current detection resistor
V_{CC2} : Supply voltage
R_X : Variable current resistor

To operate a motor at maximum current level, set Rx = infinity (open). Based on the specifications of SI-7300A, its output current Io can be seen as:

Io (rms value): 535 to 625 mA

To compute Io when different values are used for Rs and V_{CC2}, use the approximation formula below. The maximum ripple value I_{OH} of the output current waveform can be computed as follows:

$$I_{OH(max)} \fallingdotseq \frac{1}{R_S}\ (0.233 \cdot V_{CC2} - 0.026)\ [A]$$

$$I_{OH(min)} \fallingdotseq \frac{1}{RS}\ (0.214 \cdot V_{CC2} - 0.021)\ [A]$$

The graph of this equation is shown below.

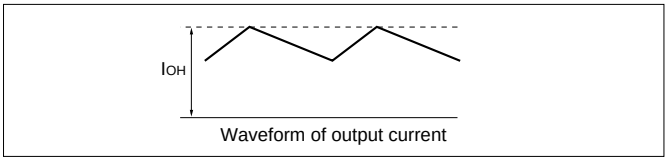

Waveform of output current

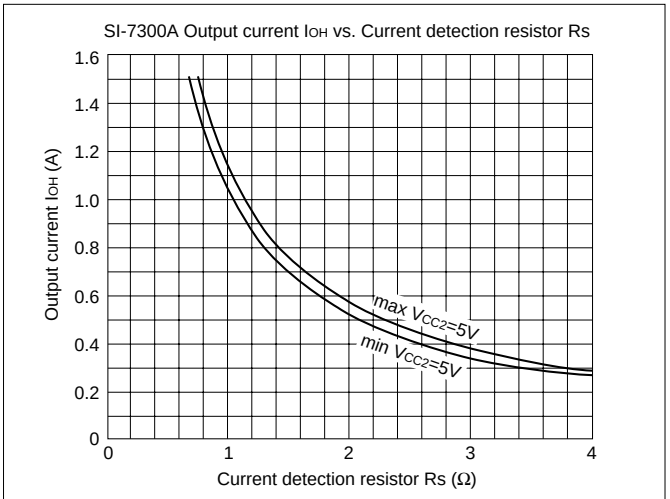

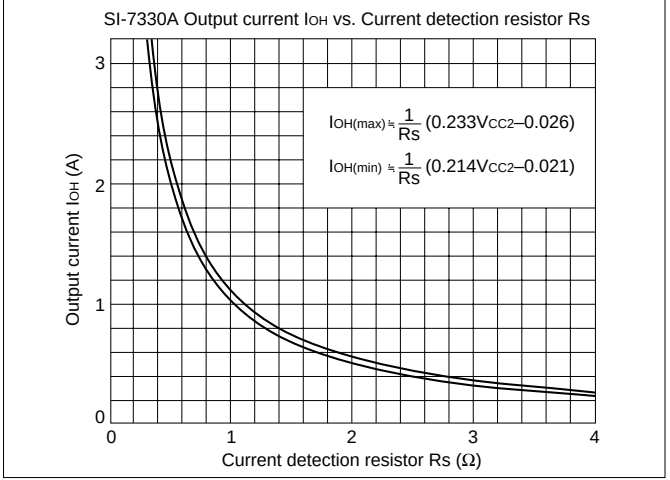

■ Power down mode

The SI-7300A can be operated in power down mode. The circuit is shown below. When transistor Tr is switched on, the reference voltage drops and the output current can be decreased.

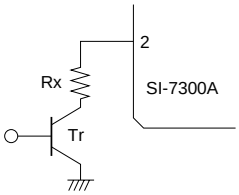

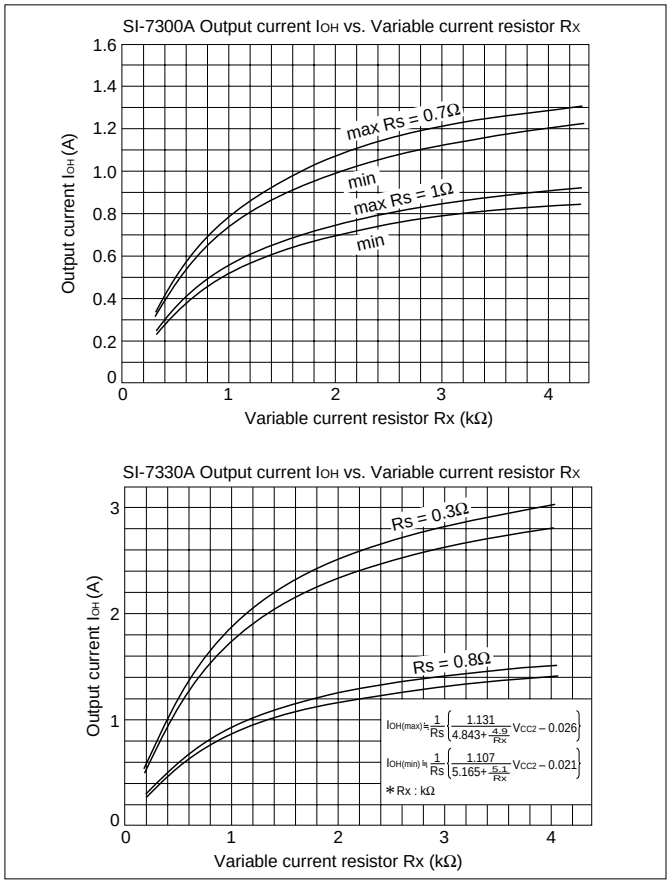

■ Example of a Frequency vs. Torque characteristic

The graph shows the relationship between frequency and pull-out torque of SI-7300A.

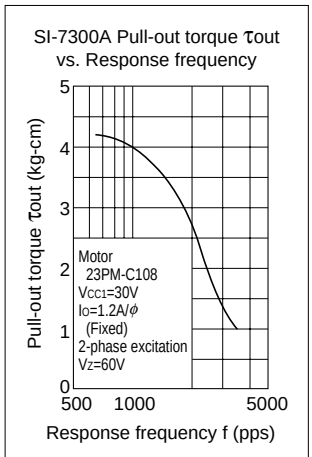

Application Note

■ Thermal design

The procedures for the thermal design of the SI-7300A are as follows:

(1) As shown in the right figure, the supply current I_{CC1} and the output current Io are measured at the maximum level of the supply voltage V_{CC1}. However, the motor is in holding mode at the 2-phase excitation.

(2) From the above measurements, the internal power dissipation (2 phases) of the hybrid IC can be obtained through the following formula.

$$Pdiss = V_{CC1} \cdot I_{CC1} - 2Io^2(R_L + R_S)$$

Where R_L: coil resistance of the motor per phase

Shown in the lower graphs are sample calculations of Pdiss vs. Io.

(3) The heatsink area corresponding to the ambient temperature can be obtained from the SI-7300A derating curve shown in the lower right.

(4) Verify that the temperature of the aluminum base plate of the hybrid IC or adjacent heatsinks is below 85°C (equivalent to max. ambient temperature) when operating under actual conditions.

* For details on thermal design, refer to the technical data.

Method for measuring current SI-7300A

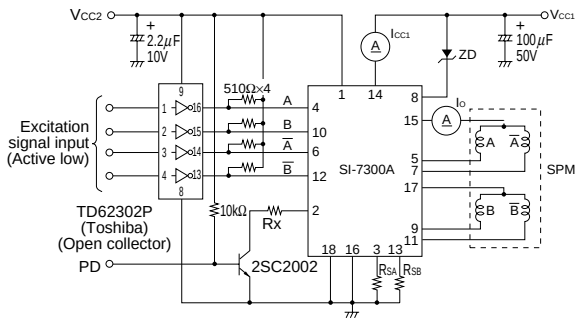

SI-7300A Heat dissipation per phase vs. output current

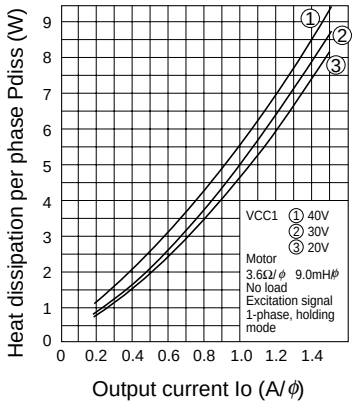

SI-7330A Heat dissipation per phase vs. output current

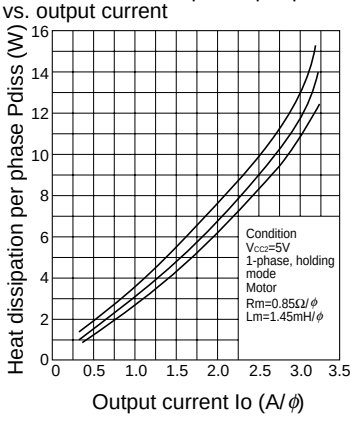

SI-7300A Derating curve

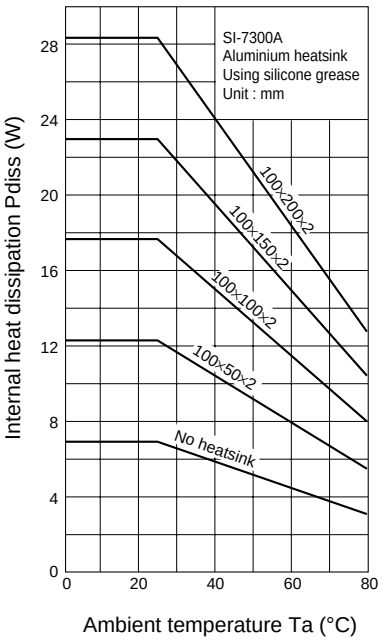

SI-7330A Derating curve

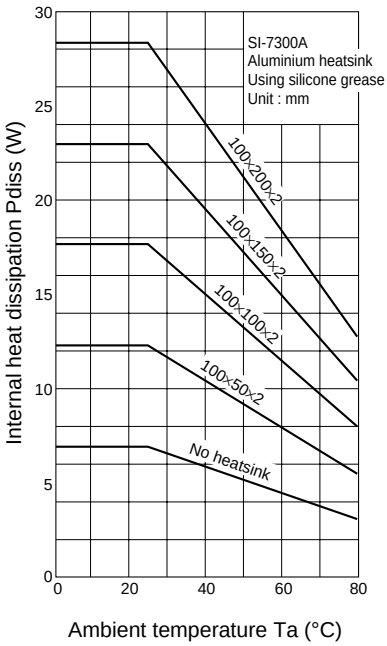

SI-7200M, SI-7230M, SI-7115B, SI-7300A, SI-7330A, SI-7500A and SI-7502

Handling Precautions

(Note: The SI-7502 is applicable for item (2) only.)

For details, refer to the relevant product specifications.

(1) Tightening torque:

The torque to be applied in tightening screws when mounting the IC on a heatsink should be below 49N•m.

(2) Solvent:

Do not use the following solvents:

Substances that dissolve the package	Chlorine-based solvents : Trichloroethylene, Trichloroethane, etc. Aromatic hydrogen compounds : Benzene, Toluene, Xylene, etc. Ketone and Acetone group solvents
Substances that weaken the package	Gasoline, Benzine and Kerosene

(3) Silicone grease:

The silicone grease to be used between the aluminum base plate of the hybrid IC and the heatsink should be any of the following:

- G-746 SHINETSU CHEMICAL INDUSTRIES CO., LTD.
- YG6260 TOSHIBA SILICONE CO., LTD.
- SC102 DOW CORNING TORAY SILICONE CO., LTD.

Please pay sufficient attention in selecting silicone grease since oil in some grease may penetrate the product, which will result in an extremely short product life.

Others

- Resistance against radiation
  Resistance against radiation was not considered in the development of these ICs because it is assumed that they will be used in ordinary environment.