查询KIA7217供应商 捷多邦，专业PCB打样工厂，24小时加急出货

KIA7217AP

BIPOLAR LINEAR INTEGRATED CIRCUIT
SILICON MONOLITHIC

5.8W AUDIO POWER AMPLIFIER.
CAR STEREO, CAR RADIO OUTPUT.

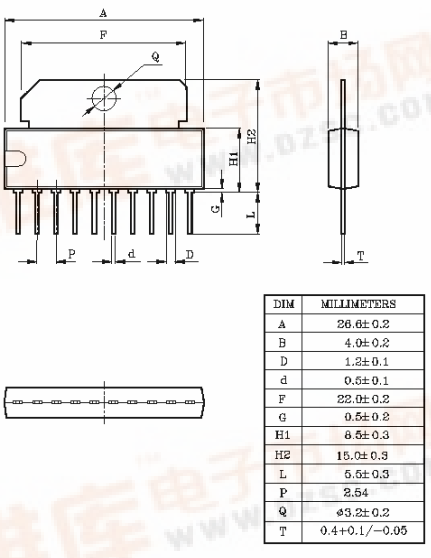

DIM	MILLIMETERS
A	26.6±0.2
B	4.0±0.2
D	1.2±0.1
d	0.5±0.1
F	22.0±0.2
G	0.5±0.2
H1	8.5±0.3
H2	15.0±0.3
L	5.5±0.3
P	2.54
Q	ø3.2±0.2
T	0.4+0.1/−0.05

SSIP−10

FEATURES

- Output Power
  : P_{OUT}=5.8W(Typ.) at V_{CC}=13.2V, R_L=4Ω, THD=10%
  : P_{OUT}=9.2W(Typ.) at V_{CC}=13.2V, R_L=2Ω, THD=10%
- Maximum Output Power :
  : P_{OM}=9.5W(Typ.) at V_{CC}=13.2V, R_L=4Ω
- Low Distortion : THD=0.15% at P_{OUT}=1W, G_V=55dB
  THD=0.07% at P_{OUT}=1W, G_V=44dB
- Wide Operating Supply Voltage Range : V_{CC}=9~18V
- Minimum Working Voltage : 9V
- Excessive Supply Voltage Protection Circuit.
- Current Limiting for Short Circuit Protection.
- Thermal Shut-down Circuit.

MAXIMUM RATINGS (Ta=25℃)

CHARACTERISTIC	SYMBOL	RATING	UNIT
Operating Supply Voltage	V_{CC}	18	V
Quiescent Supply Voltage	V_{CCQ}	25	V
Output Current (Peak)	$I_{O(peak)}$	4.5	A
Power Dissipation	P_D	7.5	W
Operating Temperature	T_{opr}	-20~75	℃
Storage Temperature	T_{stg}	-55~150	℃

ELECTRICAL CHARACTERISTICS

(Unless otherwise specified. V_{CC}=12.5V, R_L=4Ω, Rg=600Ω, R_f=82Ω, f=1kHz, Ta=25℃)

CHARACTERISTIC	SYMBOL	TEST CIRCUIT	TEST CONDITION	MIN.	TYP.	MAX.	UNIT
Quiescent Current	I_{CCQ}	-	-	-	-	60	mA
			V_{CC}=18V	-	-	80	
Output Power	P_{OUT}	-	THD=10%	4.5	5	-	W
			V_{CC}=13.2V, THD=10%	-	5.8	-	
			V_{CC}=13.2V, R_L=2Ω, THD=10%	-	9.2	-	
Maximum Output Voltage	P_{OM}	-	V_{CC}=13.2V	-	9.5	-	W
Total Harmonic Distortion	THD	-	P_{OUT}=1W	-	0.15	1.0	%
			P_{OUT}=100mW	-	0.2	1.0	
			P_{OUT}=1W, R_L=2Ω	-	0.25	1.0	
Voltage Gain (Note)	G_V	-	V_{IN}=2.45mV_{rms}	52	-	58	dB
Input Resistance	R_{IN}	-	V_{OUT}=2V_{rms}	30	40	-	kΩ
Output Noise Voltage	V_{NO}	-	Rg=10kΩ, BW=50~20kHz	-	-	3.5	mV

Note : In regard to the value of voltage gain (closed loop voltage), it is possible to be classified.

找PDF 维库一下 pdf.dzsc.com

EQUIVALENT CIRCUIT

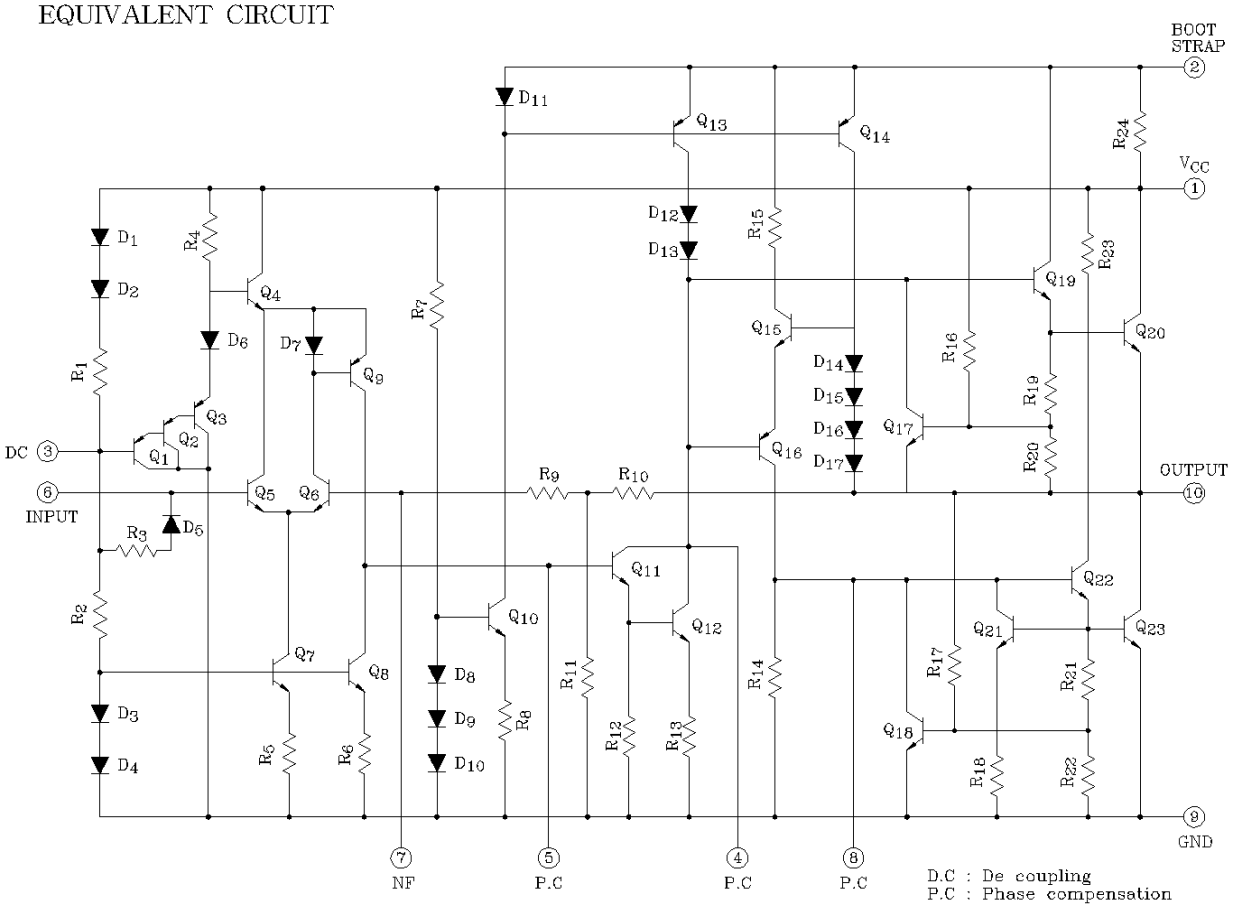

TEST AND APPLICATION CIRCUIT

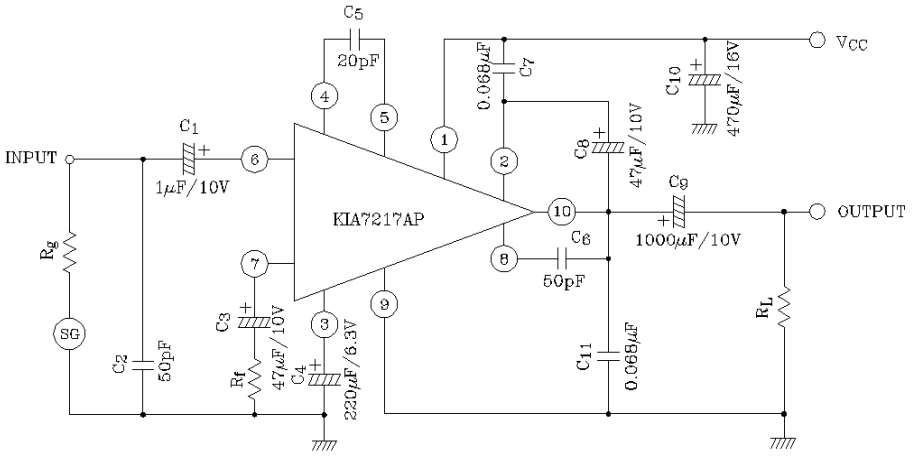

(Note) Metal Tab is connected to GND level or non-connection.
C_7 and C_{11} are polyester film capacitors.

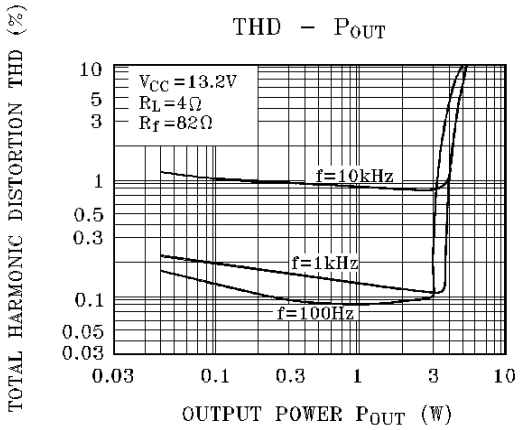
THD – POUT
VCC=13.2V
RL=4Ω
Rf=82Ω
f=10kHz
f=1kHz
f=100Hz
TOTAL HARMONIC DISTORTION THD (%)
OUTPUT POWER POUT (W)

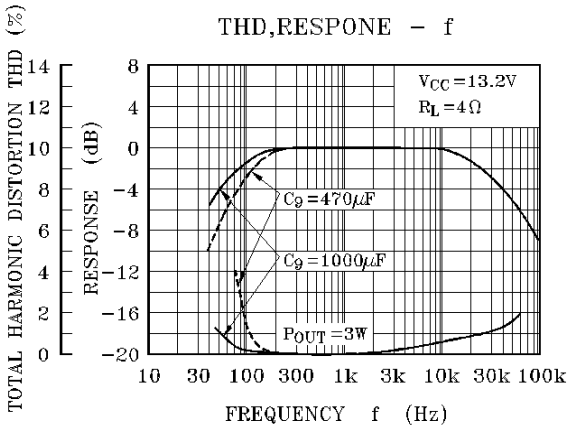
THD,RESPONE – f
VCC=13.2V
RL=4Ω
C9=470μF
C9=1000μF
POUT=3W
TOTAL HARMONIC DISTORTION THD (%)
RESPONSE (dB)
FREQUENCY f (Hz)

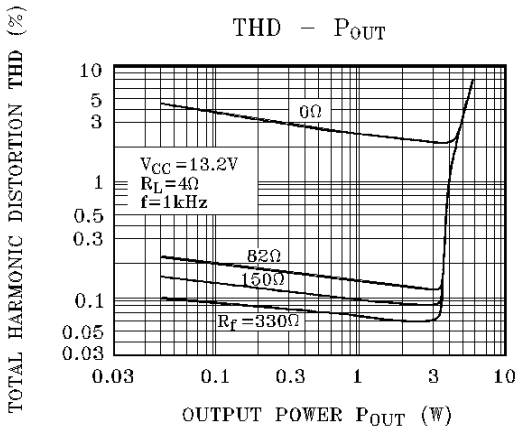
THD – POUT
0Ω
VCC=13.2V
RL=4Ω
f=1kHz
82Ω
150Ω
Rf=330Ω
TOTAL HARMONIC DISTORTION THD (%)
OUTPUT POWER POUT (W)

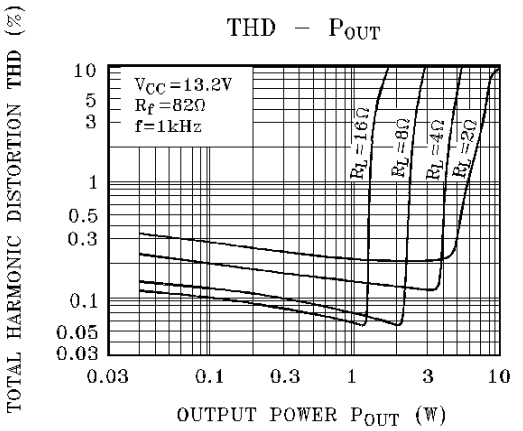
THD – POUT
VCC=13.2V
Rf=82Ω
f=1kHz
RL=16Ω
RL=8Ω
RL=4Ω
RL=2Ω
TOTAL HARMONIC DISTORTION THD (%)
OUTPUT POWER POUT (W)

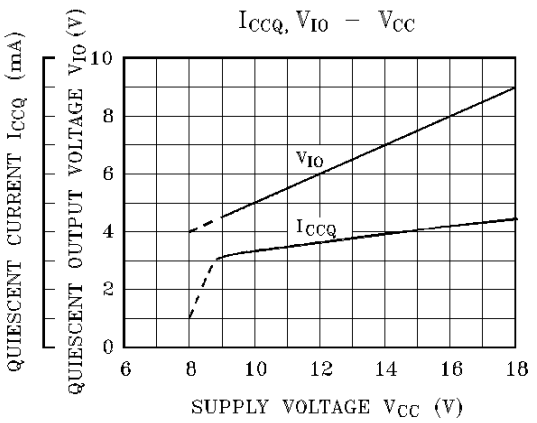
ICCQ, VIO – VCC
VIO
ICCQ
QUIESCENT CURRENT ICCQ (mA)
QUIESCENT OUTPUT VOLTAGE VIO (V)
SUPPLY VOLTAGE VCC (V)

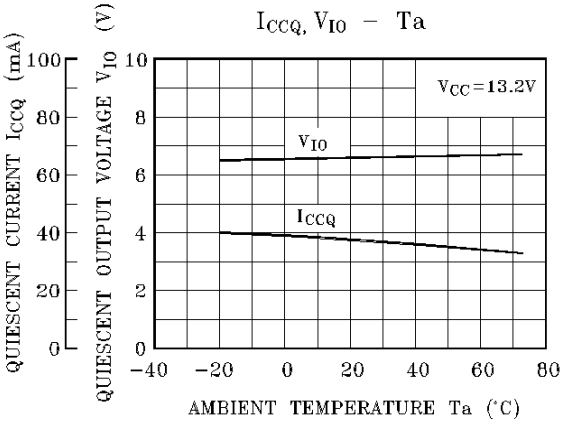
ICCQ, VIO – Ta
VCC=13.2V
VIO
ICCQ
QUIESCENT CURRENT ICCQ (mA)
QUIESCENT OUTPUT VOLTAGE VIO (V)
AMBIENT TEMPERATURE Ta (°C)

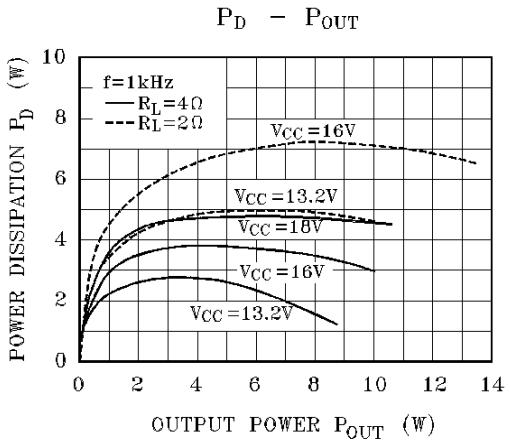
PD – POUT
f=1kHz
RL=4Ω
RL=2Ω
VCC=16V
VCC=13.2V
VCC=18V
VCC=16V
VCC=13.2V
POWER DISSIPATION PD (W)
OUTPUT POWER POUT (W)
0
2
4
6
8
10
12
14

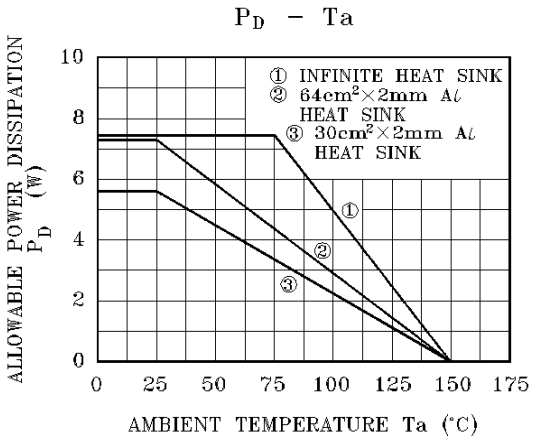
PD – Ta
① INFINITE HEAT SINK
② 64cm²×2mm Aℓ HEAT SINK
③ 30cm²×2mm Aℓ HEAT SINK
ALLOWABLE POWER DISSIPATION PD (W)
AMBIENT TEMPERATURE Ta (°C)
0
25
50
75
100
125
150
175