SIEMENS

IL440

TRIAC PREDRIVER NON-ZERO CROSSING OPTOCOUPLER

FEATURES

- 600 V Blocking Voltage
- 7 mA Maximum Trigger Current
- Isolation Voltage, 3750 VAC, t=1 sec.
- Isolation Materials per UL94

APPLICATIONS

- High Current Triac Driver
- Solid State Relays
- Switch Small AC Loads

DESCRIPTION

The IL440 consists of a GaAs infrared emitter optically coupled to a silicon planar triac chip with a non-zero crossing network. The two semiconductors are assembled in a 6 pin dual-in-line plastic package. The output detector is capable of blocking up to 600 volts which permits control of off-line voltages up to 240 VAC. The IL440 can handle currents up to 100 mA_{RMS}.

Maximum Ratings

Emitter

Reverse Voltage ..... 5 V
Forward Current ..... 60 mA
Surge Current (P.W.<10 µs)..... 3 A
Power Dissipation..... 100 mW
Junction Temperature..... 100 °C

Detector

Peak Off-state Voltage..... 600 V
On-state RMS Current ..... 100 mA
Peak Surge Current (t_p≤10 ms) ..... 1.2 A
Peak On-state Current..... 2 A
Power Dissipation..... 300 mW
Junction Temperature..... 125 °C

Package

Isolation Voltage, 1 sec. ..... 3750 VAC
per Standard Climate 23°C/50% RH, DIN 50014
Creepage ..... ≥7 mm
Clearance..... ≥7 mm
Isolation Resistance
V_{IO}=500 V, T_A=25°C ..... $\geq 10^{12}$ Ω
V_{IO}=500 V, T_A=100°C ..... $\geq 10^{11}$ Ω
Total Power Dissipation, T_A=25°C ..... 330 mW
Storage Temperature Range ..... –55°C to +125°C
Operating Temperature Range..... –40°C to +100°C
Junction Temperature..... 100°C
Lead Soldering Temperature
(2 mm from case, t<10 s.) ..... 260°C

Package Dimensions in inches (mm)

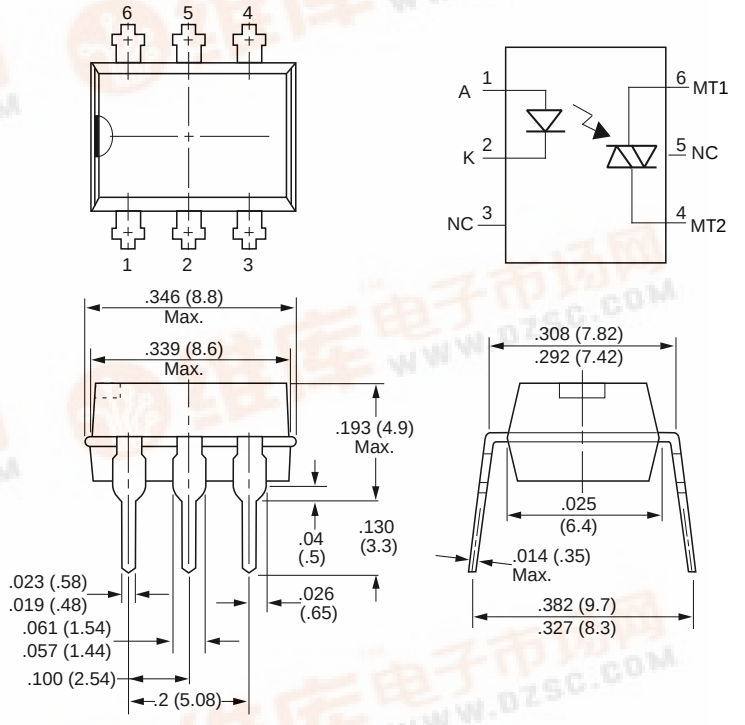

Maximum Safety Ratings

This device is used for protective separation against electrical shock within the maximum safety ratings. This must be ensured by protective circuits in the applications.

Parameter	Symbol	Max.	Unit	Test Condition
Emitter				
Forward Current	I_F	130	mA	
Detector				
Power Dissipation	P_D	300	mW	T_A≤25°C
Coupled Device				
Rated Impulse Voltage Sample Test	V_{IOTM}	6	kV	t_{T1}= 10 s, t_{test}=60 s

Electrical Characteristics, T_A=25°C

Parameter	Symbol	Min.	Typ.	Max.	Unit	Test Condition
Emitter						
Forward Voltage	V_F		1.25	1.6	V	I_F=50 mA
Breakdown Voltage	V_{BR}	5			V	I_R=10 µA
Junction Capacitance	C_J		50		pF	V_R=0 V, f=1 MHz
Detector						
Off-state Output Terminal Voltage	V_{DRM}	600			V	I_{DRM}=500 nA
Peak On-state Voltage	V_{TM}		1.5	3	V	I_{TM}=100 mA, I_{FT}=30 mA
Critical Rate of Rise of Off-state Voltage	$(dv/dt)_{cr}$		50		V/µs	I_F=0, V_S=240 V_{RMS}
	$(dv/dt)_{crq}$	0.13	0.25		V/µs	I_F=30 mA, V_S=60 V_{RMS}
Coupled Device						
Input Trigger Current	I_{FT}		5	7	mA	V_T=6 V, R_L=150 Ω
Holding Current	I_H			1	mA	I_F≥10 mA, V_S≥3 V