查询ILA3654供应商 捷多邦，专业PCB打样工厂，24小时加急出货

ILA3654,ILA3654Q

VERTICAL DEFLECTION AND GUARD CIRCUIT (110°)

GENERAL DESCRIPTION

The ILA3654 is a full performance vertical deflection output circuit for direct drive of the deflection coils and can be used for a wide range of 90° and 110° deflection systems. A guard circuit is provided which blanks the picture tube screen in the absence of deflection current.

FEATURES

· Direct drive to the deflection coils
· 90° and 110° deflection system
· Internal blanking guard circuit
· Internal voltage stabilizer

QUICK REFERENCE DATA

Output voltage	**V5-2**	**max.**	**60 V**
Output current (peak-to-peak)	I5(p-p)	max.	3 A
Supply voltage	V9-2	max.	40 V
Guard circuit output voltage	V7-2	max.	5,6 V
Operating ambient temperature range	Tamb		-25 to +60 °C
Storage temperature	Tstg		-55 to +150 °C

THERMAL RESISTANCE

From junction to mounting base Rth j-mb 3,5 to 4 K/W

BLOCK DIAGRAM.

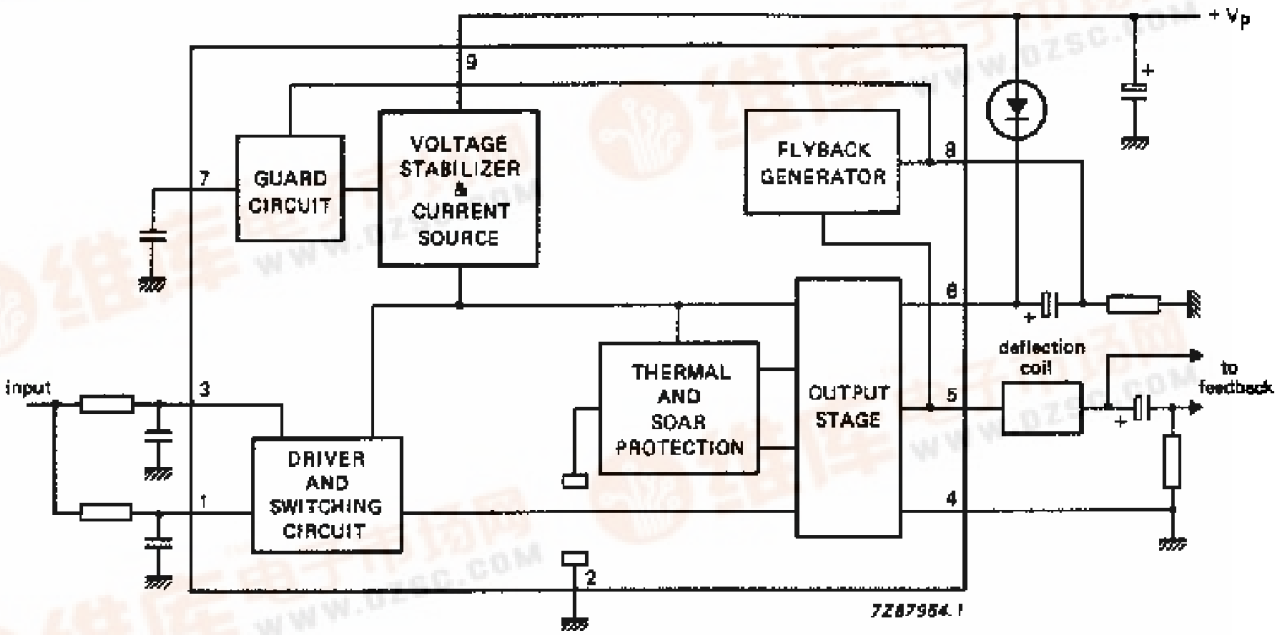

Korzhenevskogo 12, Minsk, 220064, Republic of Belarus
Fax: +375 (17) 278 28 22,
Phone: +375 (17) 278 07 11, 277 24 70, 277 24 61, 277 69 16
E-mail: belms@belms.belpak.minsk.by
URL: www.bms.by
BELMICROSYSTEMS

找PDF 维库一下 pdf.dzsc.com

ILA3654,ILA3654Q

FUNCTIONAL DESCRIPTION

Output stage and protection circuits

The output stage consists of two Darlington configurations in class B arrangement.
Each output transistor can deliver 1,5 A maximum and the VCEO is 60 V.
Protection of the output stage is such that the operation of the transistors remains well within the SOAR area in all
circumstances at the output pin, (pin 5). This is obtained by the cooperation of the thermal protection circuit, the
current-voltage detector and the short circuit protection.
Special measures in the internal circuit layout give the output transistors extra solidity.
The supply for the output stage is fed to pin 6 and the output stage ground is connected to pin 4.

Driver and switching circuit

Pin 1 is the input for the driver of the output stage. The signal at pin 1 is also applied to pin 3 which is the input of a
switching circuit (pin 1 and 3 are connected via external resistors).
This switching circuit rapidly turns off the lower output stage when the flyback starts and it, therefore, allows a quick start
of the flyback generator. The maximum required input signal for the maximum output current peak-to-peak value of 3 A
is only 3 V, the sum of the currents in pins 1 and 3 is then maximum 1 mA.

Flyback generator

During scan, the capacitor between pins 6 and 8 is charged to a level which is dependent on the value of the resistor at
pin 8 (see Fig.1).
When the flyback starts and the voltage at the output pin (pin 5) exceeds the supply voltage, the flyback generator is activated.
The supply voltage is then connected in series, via pin 8, with the voltage across the capacitor during the flyback period.
This implies that during scan the supply voltage can be reduced to the required scan voltage plus saturation voltage of the output transistors.
The amplitude of the flyback voltage can be chosen by changing the value of the external resistor at pin 8.
It should be noted that the application is chosen such that the lowest voltage at pin 8 is > 1,5 V, during normal operation.

Guard circuit

When there is no deflection current, for any reason, the voltage at pin 8 becomes less than 1 V, the guard circuit will
produce a d.c. voltage at pin 7. This voltage can be used to blank the picture tube, so that the screen will not burn in.

Voltage stabilizer

The internal voltage stabilizer provides a stabilized supply of 6 V to drive the output stage, so the drive current is not
affected by supply voltage variations.

Korzhenevskogo 12, Minsk, 220064, Republic of Belarus
Fax: +375 (17) 278 28 22,
Phone: +375 (17) 278 07 11, 277 24 70, 277 24 61, 277 69 16
E-mail: belms@belms.belpak.minsk.by
URL: www.bms.by
BELMICROSYSTEMS

ILA3654,ILA3654Q

RATINGS

Voltages				
Output voltage	Vs.4		O to 60	V
Supply voltage	Vg-4		O to 40	V
Supply voltage output stage	Ve.4		O to 60	V
Input voltage	VI-2		0 to Vg-4	V
Input voltage switching circuit	Va.2		0 to Vs.4	V
External voltage at pin 7	V7-2		0 to 5,6	V
Currents				
Repetitive peak output current	±I5RM	max.	1.5	A
Non-repetitive peak output current (note 1)	±I5SM	max.	3	A
Repetitive peak output current of flyback generator	IBRM	max.	+1,5	A
			- 1.6	A
Non-repetitive peak output current of flyback generator (note 1)	±I8SM	max.	3	A
Temperatures				
Storage temperature range	Ts,g	-65 to + 150	°C	
Operating ambient temperature range		-25 10 + 60	"C	
Operating junction temperature range (the output current at pin 5 should not exceed 2.5A)	Tj	-25to+ 150	°C	

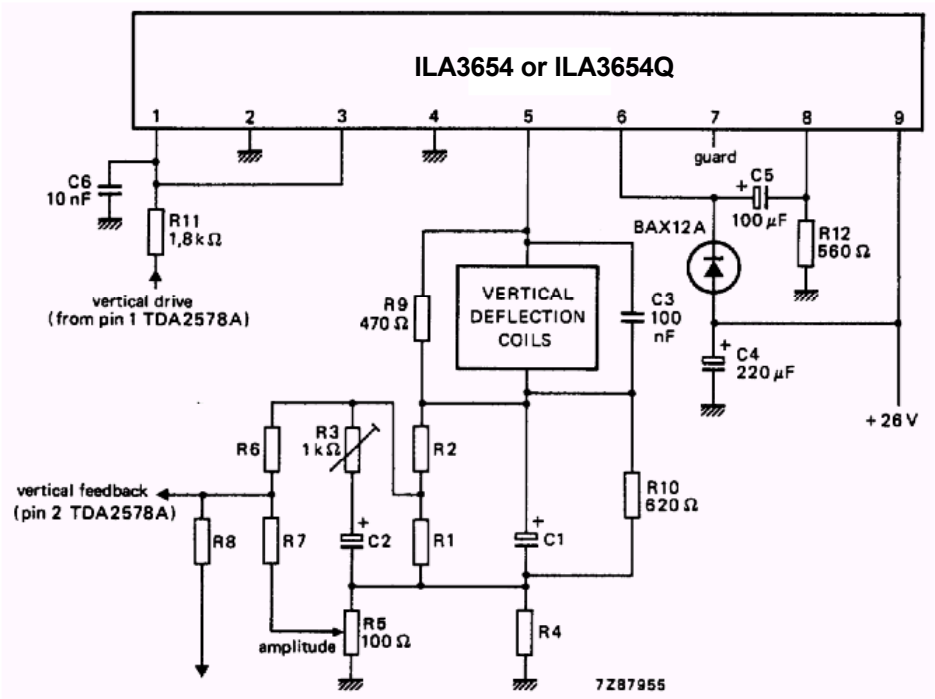

Korzhenevskogo 12, Minsk, 220064, Republic of Belarus
Fax: +375 (17) 278 28 22,
Phone: +375 (17) 278 07 11, 277 24 70, 277 24 61, 277 69 16
E-mail: belms@belms.belpak.minsk.by
URL: www.bms.by
BELMICROSYSTEMS