查询LT1513供应商 捷多邦，专业PCB打样工厂，24小时加急出货

LINEAR TECHNOLOGY

LT1513/LT1513-2

SEPIC Constant- or Programmable-Current/ Constant-Voltage Battery Charger

FEATURES

- **Charger Input Voltage May Be Higher, Equal to or Lower Than Battery Voltage**
- Charges Any Number of Cells Up to 20V
- 1% Voltage Accuracy for Rechargeable Lithium Batteries
- 100mV Current Sense Voltage for High Efficiency (LT1513)
- 0mV Current Sense Voltage for Easy Current Programming (LT1513-2)
- **Battery Can Be Directly Grounded**
- **500kHz Switching Frequency Minimizes Inductor Size**
- Charging Current Easily Programmable or Shut Down

APPLICATIONS

- Charging of NiCd, NiMH, Lead-Acid or Lithium Rechargeable Cells
- Precision Current Limited Power Supply
- Constant-Voltage/Constant-Current Supply
- Transducer Excitation
- Universal Input CCFL Driver

DESCRIPTION

The LT®1513 is a 500kHz current mode switching regulator specially configured to create a constant- or programmable-current/constant-voltage battery charger. In addition to the usual voltage feedback node, it has a current sense feedback circuit for accurately controlling output current of a flyback or SEPIC (Single-Ended Primary Inductance Converter) topology charger. These topologies allow the current sense circuit to be ground referred and completely separated from the battery itself, simplifying battery switching and system grounding problems. In addition, these topologies allow charging even when the input voltage is lower than the battery voltage. The LT1513 can also drive a CCFL Royer converter with high efficiency in floating or grounded mode.

Maximum switch current on the LT1513 is 3A. This allows battery charging currents up to 2A for a single lithium-ion cell. Accuracy of 1% in constant-voltage mode is perfect for lithium battery applications. Charging current can be easily programmed for all battery types.

LT, LTC and LT are registered trademarks of Linear Technology Corporation.

TYPICAL APPLICATION

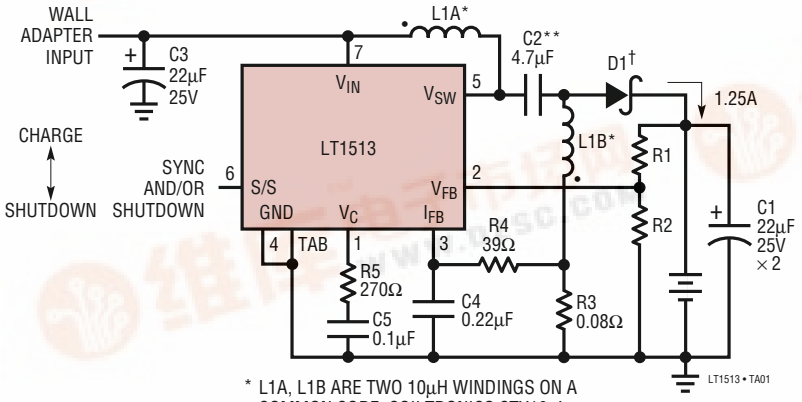

* L1A, L1B ARE TWO 10µH WINDINGS ON A COMMON CORE: COILTRONICS CTX10-4

** CERAMIC MARCON THCR40EIE475Z OR TOKIN 1E475ZY5U-C304

† MBRD340 OR MBRS340T3. MBRD340 HAS 5µA TYPICAL LEAKAGE, MBRS340T3 50µA TYPICAL

Figure 1. SEPIC Charger with 1.25A Output Current

Maximum Charging Current

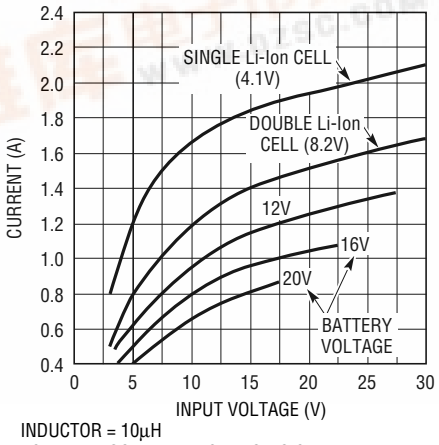

INDUCTOR = 10µH
ACTUAL PROGRAMMED CHARGING CURRENT WILL BE INDEPENDENT OF INPUT VOLTAGE IF IT DOES NOT EXCEED VALUES SHOWN

找PDF 维库一下 pdf.dzsc.com

ABSOLUTE MAXIMUM RATINGS

Supply Voltage 30V
Switch Voltage 40V
S/S Pin Voltage 30V
FB Pin Voltage (Transient, 10ms) ..... ±10V
V_{FB} Pin Current 10mA
I_{FB} Pin Voltage (Transient, 10ms) ..... ±10V

Operating Junction Temperature Range
LT1513C ..... 0°C to 125°C
LT1513I ..... –40°C to 125°C
Short Circuit ..... 0°C to 150°C
Storage Temperature Range ..... –65°C to 150°C
Lead Temperature (Soldering, 10 sec) ..... 300°C

PACKAGE/ORDER INFORMATION

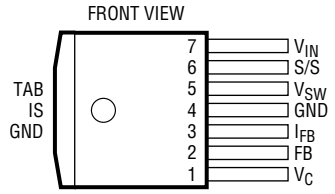

R PACKAGE
7-LEAD PLASTIC DD

T_{JMAX} = 125°C, θ_{JA} = 30°C/W

WITH PACKAGE SOLDERED TO 0.5INCH^2 COPPER AREA OVER BACKSIDE GROUND PLANE OR INTERNAL POWER PLANE, θ_{JA} CAN VARY FROM 20°C/W TO > 40°C/W DEPENDING ON MOUNTING TECHNIQUE

ORDER PART NUMBER

LT1513CR
LT1513CR-2
LT1513IR
LT1513IR-2

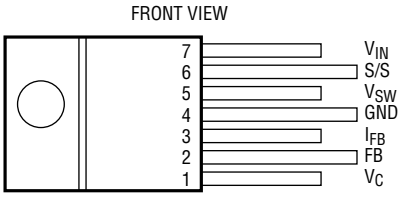

T7 PACKAGE
7-LEAD TO-220

T_{JMAX} = 125°C, θ_{JA} = 50°C/W, θ_{JC} = 4°C/W

ORDER PART NUMBER

LT1513CT7-2
LT1513IT7-2

Consult factory for Military grade parts.

ELECTRICAL CHARACTERISTICS

V_{IN} = 5V, V_C = 0.6V, V_{FB} = V_{REF}, I_{FB} = 0V, V_{SW} and S/S pins open, unless otherwise noted.

SYMBOL	PARAMETER	CONDITIONS		MIN	TYP	MAX	UNITS
V_{REF}	FB Reference Voltage	Measured at FB Pin V_C = 0.8V	 ●	1.233 1.228	1.245 1.245	1.257 1.262	V V
	FB Input Current	V_{FB} = V_{REF}	 ●		300	550 600	nA nA
	FB Reference Voltage Line Regulation	2.7V ≤ V_{IN} ≤ 25V, V_C = 0.8V	●		0.01	0.03	%/V
V_{IREF}	I_{FB} Reference Voltage (LT1513)	Measured at I_{FB} Pin V_{FB} = 0V, V_C = 0.8V	 ●	–107 –110	–100 –100	–93 –90	mV mV
	I_{FB} Input Current	V_{IFB} = V_{IREF} (Note 2)	●	10	25	35	µA
	I_{FB} Reference Voltage Line Regulation	2.7V ≤ V_{IN} ≤ 25V, V_C = 0.8V	●		0.01	0.05	%/V
I_{FBVOS}	I_{FB} Voltage Offset (LT1513-2) (Note 3)	I_{VFB} = 60µA (Note 4)	●	–7.5	2.5	12.5	mV
	I_{FB} Input Current	V_{IFB} = V_{IREF}	●	–200	–10	0	nA
	V_{FB} Source Current	V_{IREF} = –10mV, V_{FB} = 1.2V	●	–700	–300	–100	µA
g_m	Error Amplifier Transconductance	ΔI_C = ±25µA	 ●	1100 700	1500	1900 2300	µmho µmho
	Error Amplifier Source Current	V_{FB} = V_{REF} – 150mV, V_C = 1.5V	●	120	200	350	µA
	Error Amplifier Sink Current	V_{FB} = V_{REF} + 150mV, V_C = 1.5V	●		1400	2400	µA

ELECTRICAL CHARACTERISTICS

V_{IN} = 5V, V_C = 0.6V, V_{FB} = V_{REF}, I_{FB} = 0V, V_{SW} and S/S pins open, unless otherwise noted.

SYMBOL	PARAMETER	CONDITIONS		MIN	TYP	MAX	UNITS
	Error Amplifier Clamp Voltage	High Clamp, V_{FB} = 1V Low Clamp, V_{FB} = 1.5V		1.70 0.25	1.95 0.40	2.30 0.52	V V
A_V	Error Amplifier Voltage Gain				500		V/V
	V_C Pin Threshold	Duty Cycle = 0%		0.8	1	1.25	V
f	Switching Frequency	2.7V ≤ V_{IN} ≤ 25V 0°C ≤ T_J ≤ 125°C T_J < 0°C		450 430 400	500 500	550 580 580	kHz kHz kHz
	Maximum Switch Duty Cycle		●	85	95		%
	Switch Current Limit Blanking Time				130	260	ns
BV	Output Switch Breakdown Voltage	0°C ≤ T_J ≤ 125°C T_J < 0°C		40 35	47		V V
V_{SAT}	Output Switch ON Resistance	I_{SW} = 2A	●		0.25	0.45	Ω
I_{LIM}	Switch Current Limit	Duty Cycle = 50% Duty Cycle = 80% (Note 1)	● ●	3.0 2.6	3.8 3.4	5.4 5.0	A A
$\Delta I_{IN}/\Delta I_{SW}$	Supply Current Increase During Switch ON Time				15	25	mA/A
	Control Voltage to Switch Current Transconductance				4		A/V
	Minimum Input Voltage		●		2.4	2.7	V
I_Q	Supply Current	2.7V ≤ V_{IN} ≤ 25V	●		4	5.5	mA
	Shutdown Supply Current	2.7V ≤ V_{IN} ≤ 25V, $V_{S/S}$ ≤ 0.6V, T_J ≥ 0°C T_J < 0°C	●		12	30 50	μA μA
	Shutdown Threshold	2.7V ≤ V_{IN} ≤ 25V	●	0.6	1.3	2	V
	Shutdown Delay		●	5	12	25	μs
	S/S Pin Input Current	0V ≤ $V_{S/S}$ ≤ 5V	●	–10		15	μA
	Synchronization Frequency Range		●	600		800	kHz

The ● denotes specifications which apply over the full operating temperature range.

Note 1: For duty cycles (DC) between 50% and 85%, minimum guaranteed switch current is given by I_{LIM} = 1.33 (2.75 – DC).

Note 2: The I_{FB} pin is servoed to its regulating state with V_C = 0.8V.

Note 3: Consult factory for grade selected parts.

Note 4: The I_{FB} pin is sevoed to regulate FB to 1.245V

TYPICAL PERFORMANCE CHARACTERISTICS

Switch Saturation Voltage vs Switch Current

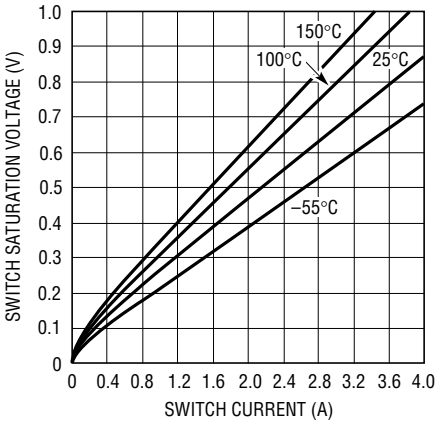

Switch Current Limit vs Duty Cycle

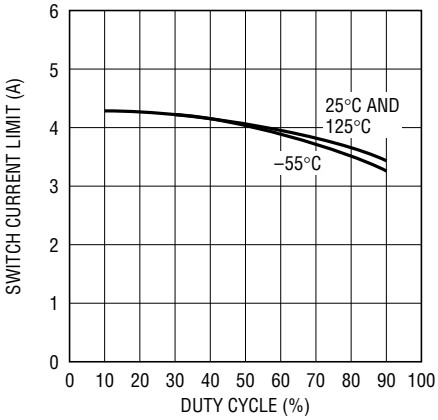

Minimum Input Voltage vs Temperature

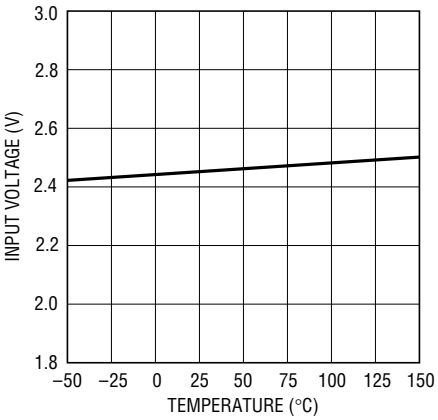

Negative Feedback Input Current vs Temperature

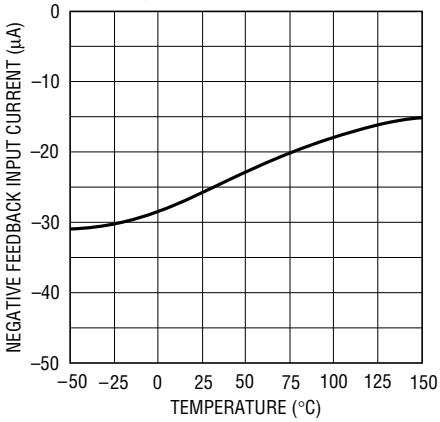

Output Charging Characteristics Showing Constant-Current and Constant-Voltage Operation

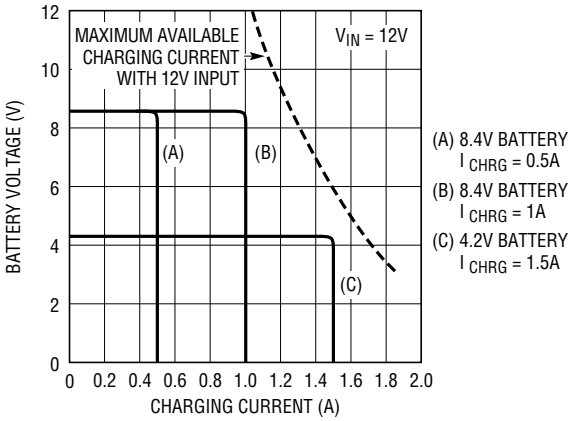

Minimum Peak-to-Peak Synchronization Voltage vs Temperature

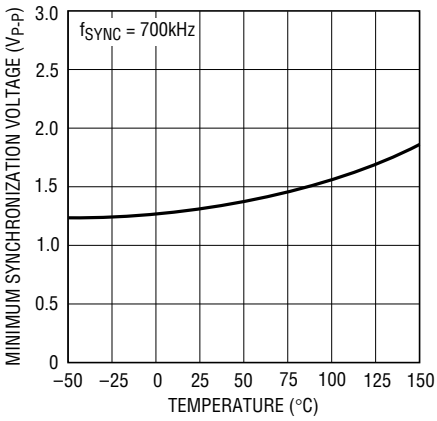

Feedback Input Current vs Temperature

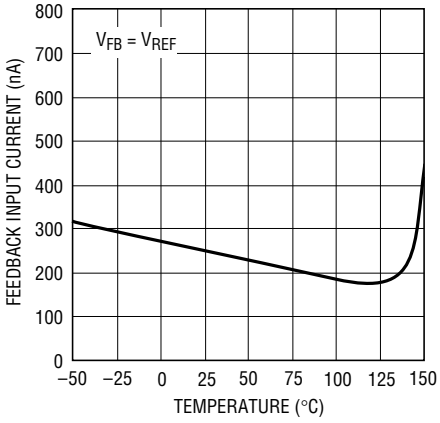

PIN FUNCTIONS

V_C (Pin 1): The compensation pin is primarily used for frequency compensation, but it can also be used for soft starting and current limiting. It is the output of the error amplifier and the input of the current comparator. Peak switch current increases from 0A to 3.6A as the V_C voltage varies from 1V to 1.9V. Current out of the V_C pin is about 200μA when the pin is externally clamped below the internal 1.9V clamp level. Loop frequency compensation is performed with a capacitor or series RC network from the V_C pin *directly to the ground pin* (avoid ground loops).

FB (Pin 2): The feedback pin is used for positive output voltage sensing. The R1/R2 voltage divider connected to FB defines Li-Ion float voltage at full charge, or acts as a voltage limiter for NiCd or NiMH applications. FB is the inverting input to the voltage error amplifier. Input bias current is typically 300nA, so divider current is normally set to 100μA to swamp out any output voltage errors due to bias current. The noninverting input of this amplifier is tied internally to a 1.245V reference. The grounded end of the output voltage divider should be connected directly to the LT1513 ground pin (avoid ground loops).

I_{FB} (Pin 3): The current feedback pin is used to sense charging current. It is the input to a current sense amplifier that controls charging current when the battery voltage is below a programmed limit. During constant-current operation, the LT1513 I_{FB} pin regulates at –100mV. Input resistance of this pin is 5kΩ, so filter resistance (R4, Figure 1) should be less than 50Ω. The 39Ω, 0.22μF filter shown in Figure 1 is used to convert the pulsating current in the sense resistor to a smooth DC current feedback signal. The LT1513-2 I_{FB} pin regulates at 0mV to provide programmable current limit. The current through R5, Figure 5, is balanced by the current through R4, programming the maximum voltage across R3.

GND (Pin 4): The ground pin is common to both control circuitry and switch current. V_C, FB and S/S signals must be Kelvin and connected as close as possible to this pin. The TAB of the R package should also be connected to the power ground.

V_{SW} (Pin 5): The switch pin is the collector of the power switch, carrying up to 3A of current with fast rise and fall times. Keep the traces on this pin as short as possible to minimize radiation and voltage spikes. In particular, the path in Figure 1 which includes SW to C2, D1, C1 and around to the LT1513 ground pin should be as short as possible to minimize voltage spikes at switch turn-off.

S/S (Pin 6): This pin can be used for shutdown and/or synchronization. It is logic level compatible, but can be tied to V_{IN} if desired. It defaults to a high ON state when floated. A logic low state will shut down the charger to a micropower state. Driving the S/S pin with a continuous logic signal of 600kHz to 800kHz will synchronize switching frequency to the external signal. Shutdown is avoided in this mode with an internal timer.

V_{IN} (Pin 7): The input supply pin should be bypassed with a low ESR capacitor located right next to the IC chip. The grounded end of the capacitor must be connected directly to the ground plane to which the TAB is connected.

TAB: The TAB on the surface mount R package is electrically connected to the ground pin, but a low inductance connection must be made to both the TAB and the pin for proper circuit operation. See suggested PC layout in Figure 4.

BLOCK DIAGRAM

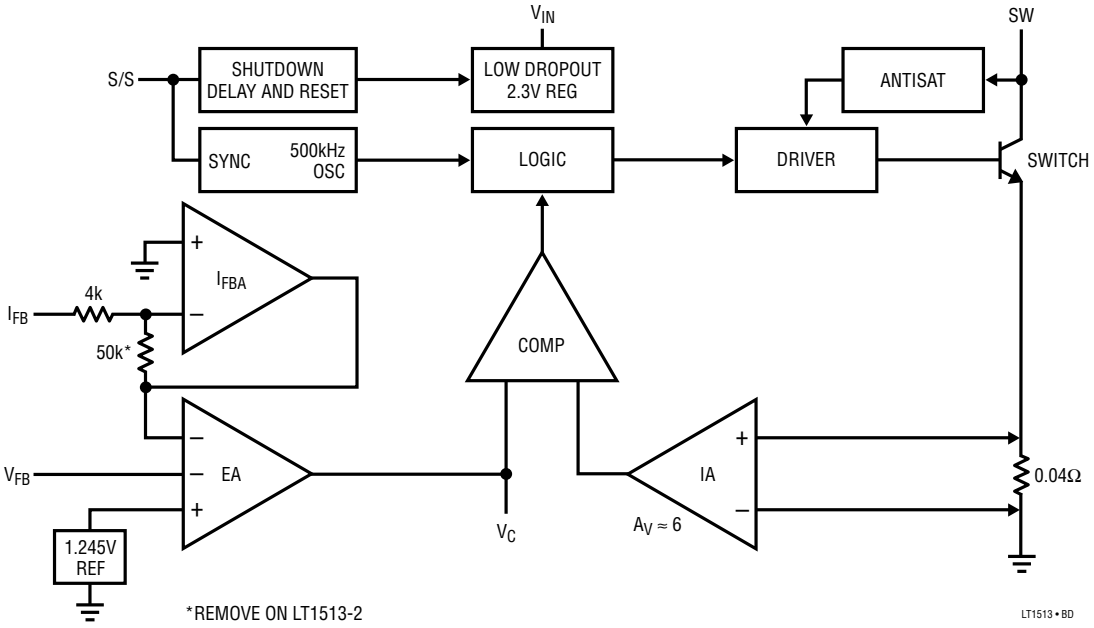

Figure 2

OPERATION

The LT1513 is a current mode switcher. This means that switch duty cycle is directly controlled by switch current rather than by output voltage or current. Referring to the Block Diagram, the switch is turned "on" at the start of each oscillator cycle. It is turned "off" when switch current reaches a predetermined level. Control of output voltage and current is obtained by using the output of a dual feedback voltage sensing error amplifier to set switch current trip level. This technique has the advantage of simplified loop frequency compensation. A low dropout internal regulator provides a 2.3V supply for all internal circuitry on the LT1513. This low dropout design allows input voltage to vary from 2.7V to 25V. A 500kHz oscillator is the basic clock for all internal timing. It turns "on" the output switch via the logic and driver circuitry. Special adaptive antisat circuitry detects onset of saturation in the power switch and adjusts driver current instantaneously to limit switch saturation. This minimizes driver dissipation and provides very rapid turn-off of the switch.

A unique error amplifier design has two inverting inputs which allow for sensing both output voltage and current. A 1.245V bandgap reference biases the noninverting input. The first inverting input of the error amplifier is brought out for positive output voltage sensing. The second inverting input is driven by a "current" amplifier which is sensing output current via an external current sense resistor. The current amplifier is set to a fixed gain of –12.5 which provides a –100mV current limit sense voltage.

The LT1513-2 option removes the feedback resistors around the I_{FB} amplifier and connects its output to the FB signal. This provides a ground referenced current sense voltage suitable for external current programming and makes amplifier input and output available for external loop compensation.

The error signal developed at the amplifier output is brought out externally and is used for frequency compensation. During normal regulator operation this pin sits at a voltage between 1V (low output current) and 1.9V (high output current). Switch duty cycle goes to zero if the V_C pin is pulled below the V_C pin threshold, placing the LT1513 in an idle mode.

APPLICATIONS INFORMATION

The LT1513 is an IC battery charger chip specifically optimized to use the SEPIC converter topology. A complete charger schematic is shown in Figure 1. The SEPIC topology has unique advantages for battery charging. It will operate with input voltages above, equal to or below the battery voltage, has no path for battery discharge when turned off, and eliminates the snubber losses of flyback designs. It also has a current sense point that is ground referred and need not be connected directly to the battery. The two inductors shown are actually just two identical windings on one inductor core, although two separate inductors can be used.

A current sense voltage is generated with respect to ground across R3 in Figure 1. The average current through R3 is always identical to the current delivered to the battery. The LT1513 current limit loop will servo the voltage across R3 to –100mV when the battery voltage is below the voltage limit set by the output divider R1/R2. Constant-current charging is therefore set at 100mV/R3. R4 and C4 filter the current signal to deliver a smooth feedback voltage to the I_{FB} pin. R1 and R2 form a divider for battery voltage sensing and set the battery float voltage. The suggested value for R2 is 12.4k. R1 is calculated from:

$$R1 = \frac{R2(V_{BAT} - 1.245)}{1.245 + R2(0.3\mu A)}$$

V_{BAT} = battery float voltage
0.3μA = typical FB pin bias current

A value of 12.4k for R2 sets divider current at 100μA. This is a constant drain on the battery when power to the charger is off. If this drain is too high, R2 can be increased to 41.2k, reducing divider current to 30μA. This introduces an additional uncorrectable error to the constant voltage float mode of about ±0.5% as calculated by:

$$V_{BAT}\ \text{Error} = \frac{\pm 0.15\mu A(R1)(R2)}{1.245(R1+R2)}$$

±0.15μA = expected variation in FB bias current around the nominal 0.3μA typical value.

With R2 = 41.2k and R1 = 228k, (V_{BAT} = 8.2V), the error due to variations in bias current would be ±0.42%.

A second option is to disconnect the divider when charger power is off. This can be done with a small NFET as shown in Figure 3. D2, C6 and R6 form a peak detector to drive the gate of the FET to about the same as the battery voltage. If power is turned off, the gate will drop to 0V and the only drain on the battery will be the reverse leakage of the catch diode D1. See Diode Selection for a discussion of diode leakage.

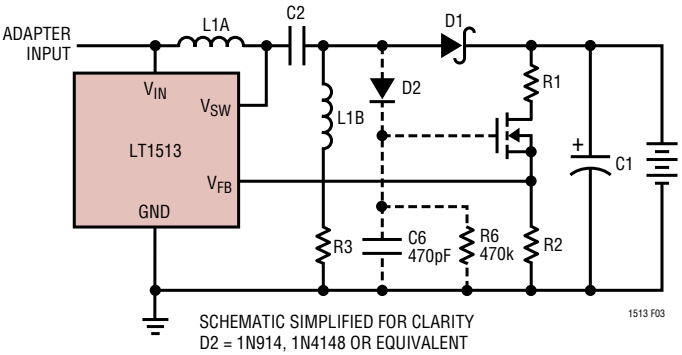

Figure 3. Eliminating Divider Current

Maximum Input Voltage

Maximum input voltage for the LT1513 is partly determined by battery voltage. A SEPIC converter has a maximum switch voltage equal to input voltage plus output voltage. The LT1513 has a maximum input voltage of 30V and a maximum switch voltage of 40V, so this limits maximum input voltage to 30V, or 40V – V_{BAT}, whichever is less.

Shutdown and Synchronization

The dual function S/S pin provides easy shutdown and synchronization. It is logic level compatible and can be pulled high or left floating for normal operation. A logic low on the S/S pin activates shutdown, reducing input supply current to 12μA. To synchronize switching, drive the S/S pin between 600kHz and 800kHz.

Inductor Selection

L1A and L1B are normally just two identical windings on one core, although two separate inductors can be used. A typical value is 10μH, which gives about 0.5A peak-to-peak inductor current. Lower values will give higher ripple current, which reduces maximum charging current. 5μH can be used if charging currents are at least 20% lower than the values

APPLICATIONS INFORMATION

shown in the maximum charging current graph. Higher inductance values give slightly higher maximum charging current, but are larger and more expensive. A low loss toroid core such as Kool Mμ®, Molypermalloy or Metglas® is recommended. Series resistance should be less than 0.04Ω for each winding. "Open core" inductors, such as rods or barrels are not recommended because they generate large magnetic fields which may interfere with other electronics close to the charger.

Input Capacitor

The SEPIC topology has relatively low input ripple current compared to other topologies and higher harmonics are especially low. RMS ripple current in the input capacitor is less than 0.25A with L = 10μH and less than 0.5A with L = 5μH. A low ESR 22μF, 25V solid tantalum capacitor (AVX type TPS or Sprague type 593D) is adequate for most applications with the following caveat. Solid tantalum capacitors can be destroyed with a very high turn-on surge current such as would be generated if a low impedance input source were "hot switched" to the charger input. If this condition can occur, the input capacitor should have the highest possible voltage rating, at least twice the surge input voltage if possible. Consult with the capacitor manufacturer before a final choice is made. A 4.7μF ceramic capacitor such as the one used for the coupling capacitor can also be used. These capacitors do not have a turn-on surge limitation. The input capacitor must be connected directly to the V_{IN} pin and the ground plane close to the LT1513.

Output Capacitor

It is assumed as a worst case that all the switching output ripple current from the battery charger could flow in the output capacitor. This is a desirable situation if it is necessary to have very low switching ripple current in the battery itself. Ferrite beads or line chokes are often inserted in series with the battery leads to eliminate high frequency currents that could create EMI problems. This forces all the ripple current into the output capacitor. Total RMS current into the capacitor has a maximum value of about 1A, and this is handled with the two paralleled 22μF, 25V capacitors shown in Figure 1. These are AVX type TPS or Sprague type 593D surface mount solid tantalum units intended for switching applications. Do not substitute other types without ensuring that they have adequate ripple current ratings. See Input Capacitor section for details of surge limitation on solid tantalum capacitors if the battery may be "hot switched" to the output of the charger.

Coupling Capacitor

C2 in Figure 1 is the coupling capacitor that allows a SEPIC converter topology to work with input voltages either higher or lower than the battery voltage. DC bias on the capacitor is equal to input voltage. RMS ripple current in the coupling capacitor has a maximum value of about 1A at full charging current. A conservative formula to calculate this is:

$$I_{COUP(RMS)} = \frac{I_{CHRG}(V_{IN} + V_{BAT})(1.1)}{2(V_{IN})}$$

(1.1 is a fudge factor to account for inductor ripple current and other losses)

With I_{CHRG} = 1.2A, V_{IN} = 15V and V_{BAT} = 8.2V, I_{COUP} = 1.02A.

The recommended capacitor is a 4.7μF ceramic type from Marcon or Tokin. These capacitors have extremely low ESR and high ripple current ratings in a small package. Solid tantalum units can be substituted if their ripple current rating is adequate, but typical values will increase to 22μF or more to meet the ripple current requirements.

Diode Selection

The switching diode should be a Schottky type to minimize both forward and reverse recovery losses. Average diode current is the same as output charging current, so this will be under 2A. A 3A diode is recommended for most applications, although smaller devices could be used at reduced charging current. *Maximum diode reverse voltage will be equal to input voltage plus battery voltage.*

Diode reverse leakage current will be of some concern during charger shutdown. This leakage current is a direct drain on the battery when the charger is not powered. High

Kool Mμ is a registered trademark of Magnetics, Inc.
Metglas is a registered trademark of AlliedSignal Inc.

APPLICATIONS INFORMATION

current Schottky diodes have relatively high leakage currents (5μA to 500μA) even at room temperature. The latest very-low-forward devices have especially high leakage currents. It has been noted that surface mount versions of some Schottky diodes have as much as ten times the leakage of their through-hole counterparts. This may be because a low forward voltage process is used to reduce power dissipation in the surface mount package. In any case, check leakage specifications carefully before making a final choice for the switching diode. Be aware that diode manufacturers want to specify a maximum leakage current that is ten times higher than the typical leakage. It is very difficult to get them to specify a low leakage current in high volume production. This is an on going problem for all battery charger circuits and most customers have to settle for a diode whose typical leakage is adequate, but theoretically has a worst-case condition of higher than desired battery drain.

Thermal Considerations

Care should be taken to ensure that worst-case conditions do not cause excessive die temperatures. Typical thermal resistance is 30°C/W for the R package but this number will vary depending on the mounting technique (copper area, airflow, etc.).

Average supply current (including driver current) is:

$$I_{IN} = 4mA + \frac{(V_{BAT})(I_{CHRG})(0.024)}{V_{IN}}$$

Switch power dissipation is given by:

$$P_{SW} = \frac{(I_{CHRG})^2 (R_{SW})(V_{BAT} + V_{IN})(V_{BAT})}{(V_{IN})^2}$$

R_{SW} = Output switch ON resistance

Total power dissipation of the die is equal to supply current times supply voltage, plus switch power:

$P_{D(TOTAL)} = (I_{IN})(V_{IN}) + P_{SW}$

For V_{IN} = 10V, V_{BAT} = 8.2V, I_{CHRG} = 1.2A, R_{SW} = 0.3Ω,

I_{IN} = 4mA + 24mA = 28mA

P_{SW} = 0.64W

P_D = (10)(0.028) + 0.64 = 0.92W

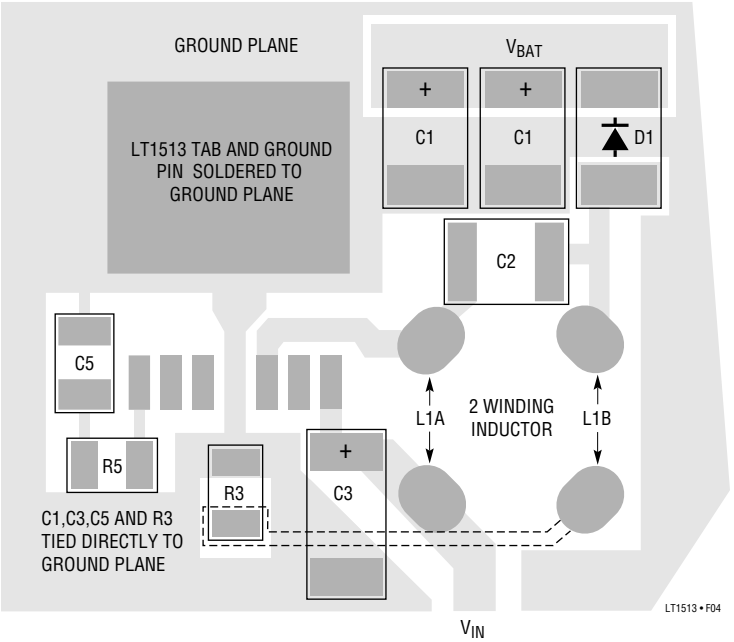

Figure 4. LT1513 Suggested Partial Layout for Critical Thermal and Electrical Paths

APPLICATIONS INFORMATION

Programmed Charging Current

LT1513-2 charging current can be programmed with a DC voltage source or equivalent PWM signal, as shown in Figure 5. In constant-current mode, I_{FB} acts as a virtual ground. The I_{SET} voltage across R5 is balanced by the voltage across R4 in the ratio R4/R5.

Charging current is given by:

$$I_{CHARGE} = \frac{(V_{ISET})(R4/R5) - I_{FBVOS}}{R3}$$

I_{FB} input current is small and can normally be ignored, but I_{FB} offset voltage must be considered if operating over a wide range of program currents. The voltage across R3 at maximum charge current can be increased to reduce offset errors at lower charge currents. In Figure 5, I_{SET} from 0V to 5V corresponds to an I_{CHARGE} of 0A to 1A +37/–62mA. C4 and R4 smooth the switch current waveform. During constant-current operation, the voltage feedback network loads the FB pin, which is held at V_{REF} by the I_{FB} amplifier. It is recommended that this load does not exceed 60μA to maintain a sharp constant voltage to constant current crossover characteristic. I_{CHARGE} can also be controlled by a PWM input. Assuming the signal is a CMOS rail-to-rail output with a source impedance of less than a few hundred ohms, effective I_{SET} is V_{CC} multiplied by the PWM ratio. I_{CHARGE} has good linearity over the entire 0% to 100% range.

Voltage Mode Loop Stability

The LT1513 operates in constant-voltage mode during the final phase of charging lithium-ion and lead-acid batteries. This feedback loop is stabilized with a series resistor and capacitor on the V_C pin of the chip. Figure 6 shows the simplified model for the voltage loop. The error amplifier is modeled as a transconductance stage with g_m = 1500μmho

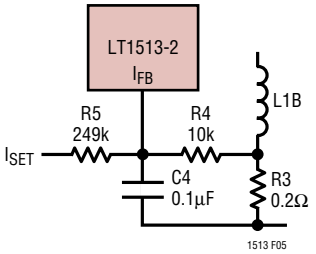

Figure 5

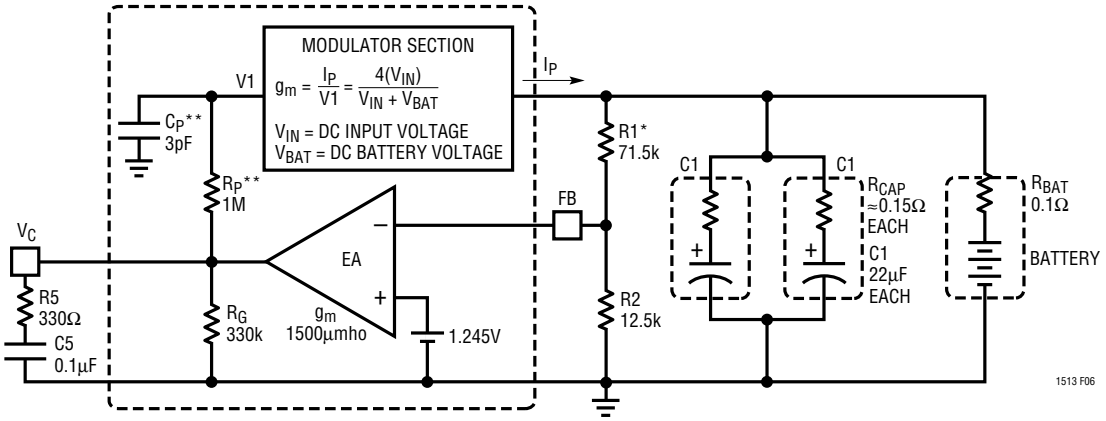

* FOR 8.4V BATTERY. ADJUST VALUE OF R1 FOR ACTUAL BATTERY VOLTAGE
** R_P AND C_P MODEL PHASE DELAY IN THE MODULATOR

THIS IS A SIMPLIFIED AC MODEL FOR THE LT1513 IN CONSTANT-VOLTAGE MODE. RESISTOR AND CAPACITOR NUMBERS CORRESPOND TO THOSE USED IN FIGURE 1. R_P AND C_P MODEL THE PHASE DELAY IN THE MODULATOR. C3 IS 3pF FOR A 10μH INDUCTOR. IT SHOULD BE SCALED PROPORTIONALLY FOR OTHER INDUCTOR VALUES (6pF FOR 20μH). THE MODULATOR IS A TRANSCONDUCTANCE WHOSE GAIN IS A FUNCTION OF INPUT AND BATTERY VOLTAGE AS SHOWN.

AS SHOWN, THIS LOOP HAS A UNITY-GAIN FREQUENCY OF ABOUT 250Hz. UNITY-GAIN WILL MOVE OUT TO SEVERAL KILOHERTZ IF BATTERY RESISTANCE INCREASES TO SEVERAL OHMS. R5 IS NOT USED IN ALL APPLICATIONS, BUT IT GIVES BETTER PHASE MARGIN IN CONSTANT-VOLTAGE MODE WITH HIGH BATTERY RESISTANCE.

Figure 6. Constant-Voltage Small-Signal Model

APPLICATIONS INFORMATION

(from the Electrical Characteristics). Amplifier output resistance is modeled with a 330k resistor. The power stage (modulator section) of the LT1513 is modeled as a transconductance whose value is $4(V_{IN})/(V_{IN} + V_{BAT})$. This is a very simplified model of the actual power stage, but it is sufficient when the unity-gain frequency of the loop is low compared to the switching frequency. The output filter capacitor model includes its ESR (R_{CAP}). A series resistance (R_{BAT}) is also assigned to the battery model.

Analysis of this loop normally shows an extremely stable system for all conditions, even with 0Ω for R5. The one condition which can cause reduced phase margin is with a very large battery resistance (>5Ω), or with the battery replaced with a resistive load. The addition of R5 gives good phase margin even under these unusual conditions. R5 should not be increased above 330Ω without checking for two possible problems. The first is instability in the constant current region (see Constant-Current Mode Loop Stability), and the second is subharmonic switching where switch duty cycle varies from cycle to cycle. This duty cycle instability is caused by excess switching frequency ripple voltage on the V_C pin. Normally this ripple is very low because of the filtering effect of C5, but large values of R5 can allow high ripple on the V_C pin. Normal loop analysis does not show this problem, and indeed small signal loop stability can be excellent even in the presence of subharmonic switching. The primary issue with subharmonics is the presence of EMI at frequencies below 500kHz.

Constant-Current Mode Loop Stability

The LT1513 is normally very stable when operating in constant-current mode (see Figure 7), but there are certain conditions which may create instabilities. The combination of higher value current sense resistors (low programmed charging current), higher input voltages, and the addition of a loop compensation resistor (R5) on the V_C pin may create an unstable current mode loop. (A resistor is sometimes added in series with C5 to improve loop phase margin when the loop is operating in voltage mode.) Instability results because loop gain is too high in the 50kHz to 150kHz region where excess phase occurs in the current sensing amplifier and the modulator. The I_{FBA} amplifier (gain of –12.5) has a pole at approximately 150kHz. The modulator section consisting of the current comparator, the power switch and the magnetics, has a pole at approximately 50kHz when the coupled inductor value is 10μH. Higher inductance will reduce the pole frequency proportionally. The design procedure presented here is to roll off the loop to unity-gain at a frequency of 25kHz or lower to avoid these excess phase regions.

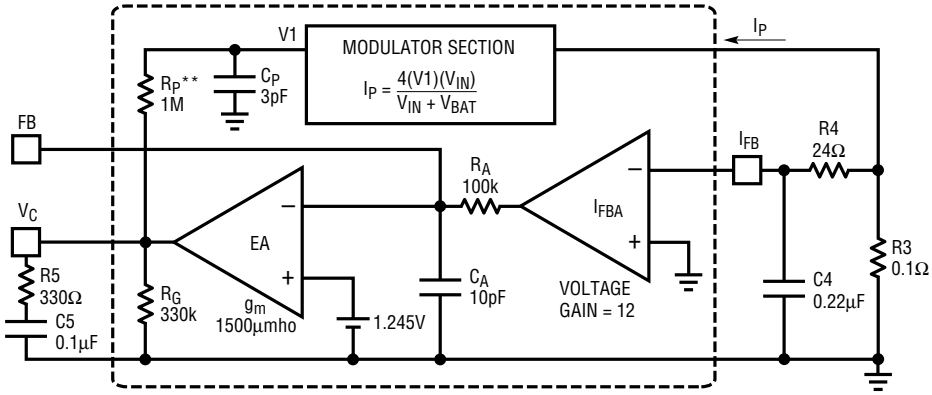

THIS IS A SIMPLIFIED AC MODEL FOR THE LT1513 IN CONSTANT-CURRENT MODE. RESISTOR AND CAPACITOR NUMBERS CORRESPOND TO THOSE USED IN FIGURE 1. R_P AND C_P MODEL THE PHASE DELAY IN THE PowerPath. C3 IS 3pF FOR A 10μH INDUCTOR. IT SHOULD BE SCALED PROPORTIONALLY FOR OTHER INDUCTOR VALUES (6pF FOR 20μH). THE PowerPath IS A TRANSCONDUCTANCE WHOSE GAIN IS A FUNCTION OF INPUT AND BATTERY VOLTAGE AS SHOWN.

THE CURRENT AMPLIFIER HAS A FIXED VOLTAGE GAIN OF 12. ITS PHASE DELAY IS MODELED WITH R_A AND C_A.

THE ERROR AMPLIFIER HAS A TRANSCONDUCTANCE OF 1500μmho AND AN INTERNAL OUTPUT SHUNT RESISTANCE OF 330k.

AS SHOWN, THIS LOOP HAS A UNITY-GAIN FREQUENCY OF ABOUT 27kHz. R5 IS NOT USED IN ALL APPLICATIONS, BUT IT GIVES BETTER PHASE MARGIN IN CONSTANT VOLTAGE MODE.

1513 F07

Figure 7. Constant-Current Small-Signal Model

APPLICATIONS INFORMATION

The suggested way to control unity loop frequency is to increase the filter time constant on the I_{FB} pin (R4/C4 in Figures 1 and 7). The filter resistor cannot be arbitrarily increased because high values will affect charging current accuracy. Charging current will increase by 1% for each 40Ω increase in R4. There is no inherent limitation on the value of C4, but if this capacitor is ceramic, it should be an X7R type to maintain its value over temperature. X7R dielectric requires a larger footprint.

The formula for calculating the minimum value for the filter capacitor C4 is:

$$C4 = \frac{(R3)(4)(V_{IN})(12)(1500\mu)(R5)}{2\pi(f)(R4)(V_{IN} + V_{BAT})}$$

V_{IN} = Highest input voltage
1500μ = Transconductance of error amplifier
(EA)f = Desired unity-gain frequency
V_{BAT} = Battery voltage

For example, assume $V_{IN(MAX)}$ = 15V, R3 = 0.4Ω (charging current set to 0.25A), R4 = 24Ω, R5 = 330Ω and V_{BAT} = 8V,

$$C4 = \frac{0.4(4)(15)(12)(0.0015)(330)}{6.3(25000)(39)(15+8)} = 1\mu F$$

The value for C4 could be reduced to a more manageable size by increasing R4 to 75Ω and reducing R5 to 300Ω, yielding 0.47μF for C4. The 2% increase in charging current can be ignored or factored into the value for R3.

More Help

Linear Technology Field Application Engineers have a CAD spreadsheet program for detailed calculations of circuit operating conditions. In addition, our Applications Department is always ready to lend a helping hand. The LT1371 data sheet may also be helpful. The LT1513 is identical except for the current amplifier circuitry.

TYPICAL APPLICATIONS

Lithium-Ion Battery Charger with Switchable Charge Current

Many battery chemistries require several constant-current settings during the charging cycle. The circuit shown in Figure 8 uses the LT1513-2 to provide switchable 1.35A and 0.13A constant-current modes. The circuit is based on a standard SEPIC battery charger circuit set to a single lithium-ion cell charge voltage of 4.1V. The LT1513-2 has I_{FB} referenced to ground allowing a simple resistor network to set the charging current values. In constant-current mode, the I_{FB} error amplifier drives the FB pin, increasing charging current, until I_{R4} is balanced by I_{R5}.

$$I_{CHARGE} = \frac{(I_{R5})(R4) - I_{FBVOS}}{R3}$$

There are several ways to control I_{R5} including DAC, PWM or resistor network as shown here. If the lithium cell requires precharging, Q1 is turned on, setting a constant current of 0.13A. When charge voltage is reached, Q1 is turned off, programming the full charge current of 1.35A. As the cell voltage approaches 4.1V, the voltage sensing network (R1, R2) starts driving the V_{FB} pin, changing the LT1513-2 to constant-voltage mode. As charging current falls, the output remains in constant-voltage mode for the remainder of the charging cycle. When charging is complete, the LT1513-2 can be shut down with the S/S pin.

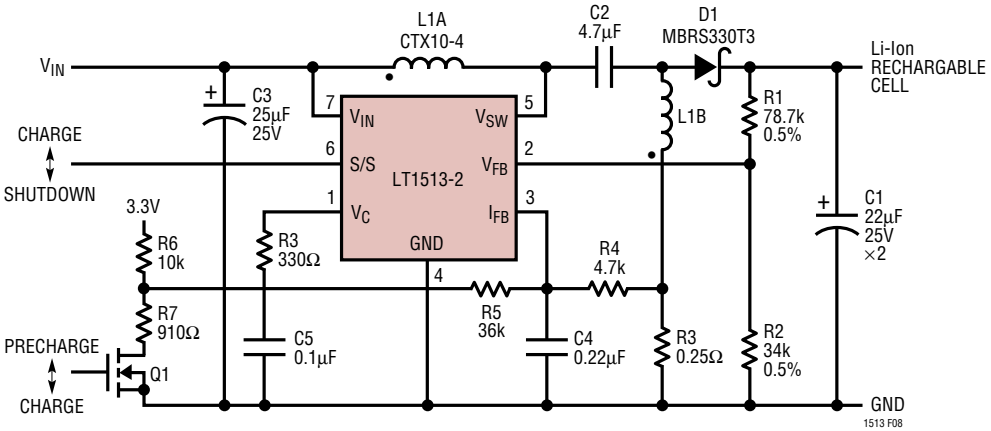

Figure 8. Lithium-Ion Battery Charger

TYPICAL APPLICATIONS

This Cold Cathode Fluorescent Lamp driver uses a Royer class self-oscillating sine wave converter to driver a high voltage lamp with an AC waveform. CCFL Royer converters have significantly degraded efficiency if they must operate at low input voltages, and this circuit was designed to handle input voltages as low as 2.7V. Therefore, the LT1513 is connected to generate a negative current through L2 that allows the Royer to operate as if it were connected to a constant higher voltage input.

The Royer output winding and the bulb are allowed to float in this circuit. This can yield significantly higher efficiency in situations where the stray bulb capacitance to surrounding enclosure is high. To regulate bulb current in Figure 9, Royer *input* current is sensed with R2 and filtered with R3 and C6. This negative feedback signal is applied to the I_{FB} pin of the LT1513. For more information on this circuit contact the LTC Applications Department and see Design Note 133. Considerable written application literature on Royer CCFL circuits is also available from other LTC Application and Design Notes.

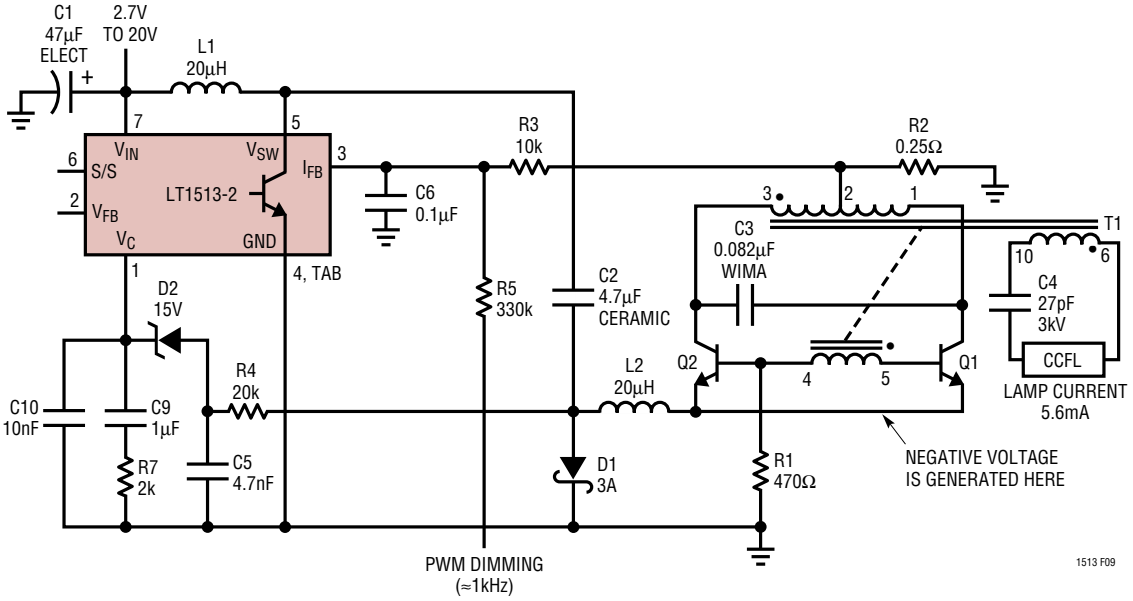

C2: TOKIN MULTILAYER CERAMIC
C3: MUST BE A LOW LOSS CAPACITOR, WIMA MKP-20 OR EQUIVALENT
L1, L2: COILTRONICS CTX20-4 (MUST BE SEPARATE INDUCTORS)
Q1, Q2: ZETEX ZTX849 OR FZT849
T1: COILTRONICS CTX110605 (67:1)

Figure 9. CCFL Power Supply for Floaing Lamp Configuration Operates on 2.7V

PACKAGE DESCRIPTION

Dimensions in inches (millimeters) unless otherwise noted.

R Package
7-Lead Plastic DD Pak
(LTC DWG # 05-08-1462)

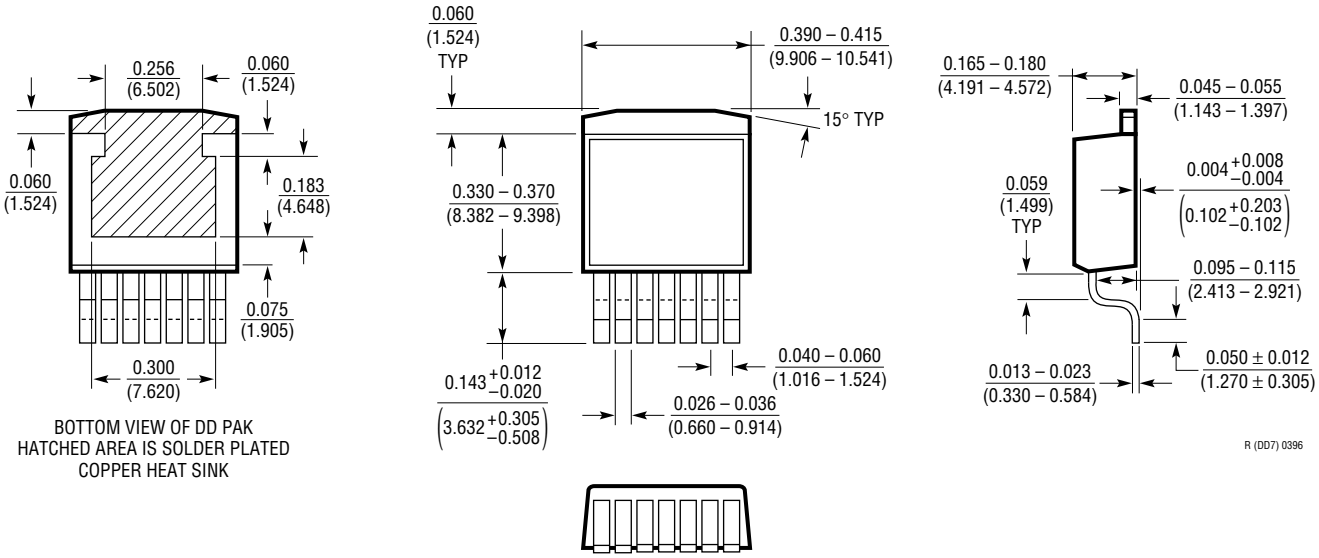

T7 Package
7-Lead Plastic TO-220 (Standard)
(LTC DWG # 05-08-1422)

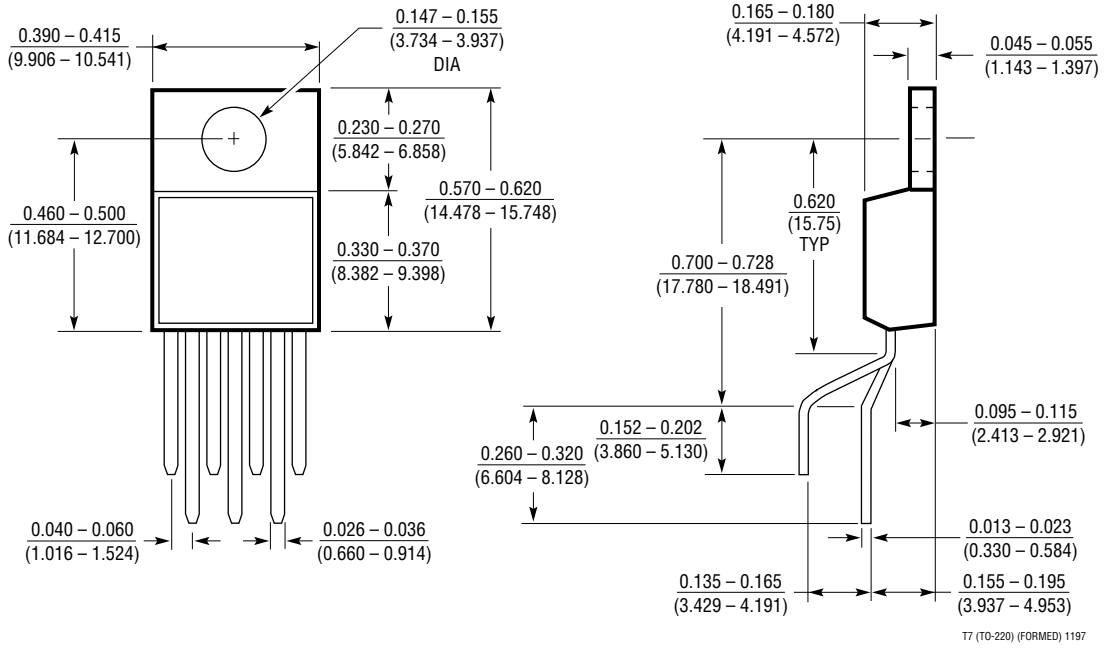

RELATED PARTS

PART NUMBER	DESCRIPTION	COMMENTS
LT1239	Backup Battery Management System	Charges Backup Battery and Regulates Backup Battery Output when Main Battery Removed
LTC®1325	Microprocessor Controlled Battery Management System	Can Charge, Discharge and Gas Gauge NiCd, NiMH and Pb-Acid Batteries with Software Charging Profiles
LT1510	1.5A Constant-Current/Constant-Voltage Battery Charger	Step-Down Charger for Li-Ion, NiCd and NiMH
LT1511	3.0A Constant-Current/Constant-Voltage Battery Charger with Input Current Limiting	Step-Down Charger that Allows Charging During Computer Operation and Prevents Wall-Adapter Overload
LT1512	SEPIC Constant-Current/Constant-Voltage Battery Charger	Step-Up/Step-Down Charger for Up to 1A Current