查询IRUD360CW40供应商 捷多邦，专业PCB打样工厂，24小时加急出货

Bulletin PD-20013 Rev.B 10/03

International
IOR Rectifier

IRUD360CW40

FRED

Ultrafast, Soft Recovery Diode

Features

- Ultrafast Recovery
- 150°C Operating Junction Temperature

Benefits

- Reduced RFI and EMI
- Higher Frequency Operation
- Reduced Snubbing
- Reduced Parts Count

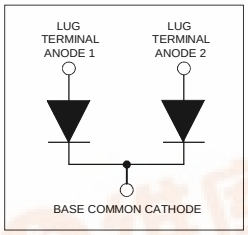

V_R = 400V

V_F(typ.) = 1.23V

$I_{F(AV)}$ = 350A

Description/ Applications

These diodes are optimized to reduce losses and EMI/ RFI in high frequency power conditioning systems. The softness of the recovery eliminates the need for a snubber in most applications. These devices are ideally suited for HF welding, power converters and other applications where switching losses are not a significant portion of the total losses.

Absolute Maximum Ratings

Parameters (*)		Max	Units
V_R	Cathode-to-Anode Voltage	400	V
$I_{F(AV)}$ @ T_C = 25°C	Continuous Forward Current	350	A
$I_{F(AV)}$ @ T_C = 110°C	Continuous Forward Current	190	
I_{FSM}	Single Pulse Forward Current	1200	
P_D @ T_C = 25°C	Maximum Power Dissipation	570	W
P_D @ T_C = 110°C	Maximum Power Dissipation	180	

Case Styles

IRUD360CW40

TO-244

(*) Per Leg unless otherwise specified

找PDF 维库一下 pdf.dzsc.com

Electrical Characteristics (per Leg) @ T_J = 25°C (unless otherwise specified)

	Parameters	Min	Typ	Max	Units	Test Conditions
V_{BR}	Breakdown Voltage,	400	-	-	V	I_R = 100µA
V_{FM}	Forward Voltage	-	1.09	1.27		I_F = 180A
		-	1.23	1.50		I_F = 360A
		-	0.88	0.96		I_F = 180A @ T_J = 150°C
		-	1.04	1.18		I_F = 360A @ T_J = 150°C
I_{RM}	Reverse Leakage Current	-	-	65	µA	V_R = V_R Rated
		-	0.26	1.28	mA	T_J = 150°C, V_R = V_R Rated
L_S	Series Inductance	-	5	-	nH	from top of terminal hole to mounting plane

Dynamic Recovery Characteristics @ T_J = 25°C (unless otherwise specified)

	Parameters	Min	Typ	Max	Units	Test Conditions
t_{rr}	Reverse Recovery Time	-	42	69	ns	I_f = 1.0A, dif/dt = 200A/µs, Vr = 30V
		-	74	-		I_f = 180A, dif/dt = 200A/µs, Vr = 200V
		-	171	-		I_f = 180A, dif/dt =200A/µs, Vr =200V @ T_J = 125°C
I_{RRM}	Peak Recovery Current	-	5.1	-	A	I_f = 1.0A, dif/dt = 200A/µs, Vr = 30V
		-	6.6	-		I_f = 180A, dif/dt = 200A/µs, Vr = 200V
		-	15.2	-		I_f = 180A, dif/dt =200A/µs, Vr =200V @ T_J = 125°C
Q_{rr}	Reverse Recovery Charge	-	126	-	nC	I_f = 1.0A, dif/dt = 200A/µs, Vr = 30V
		-	243	-		I_f = 180A, dif/dt = 200A/µs, Vr = 200V
		-	1295	-		I_f = 180A, dif/dt =200A/µs, Vr =200V @ T_J = 125°C

Thermal - Mechanical Characteristics

	Parameters		Min	Typ	Max	Units
T_J	Max. Junction Temperature Range		- 40	-	150	°C
T_{Stg}	Max. Storage Temperature Range		- 40	-	150	
R_{thJC}	Thermal Resistance, Junction to Case	Per Leg	-	-	0.22	°C/W
	Thermal Resistance, Junction to Case	Per Module	-	-	0.11	
R_{thCS}	Thermal Resistance, Case to Heatsink flat greased surface		-	0.10	-	
Wt	Weight		-	68 (2.4)	-	g (oz)
T	Mounting Torque		30 (3.4)	-	40 (4.6)	lbf.in
	Mounting Torque Center Hole		12 (1.4)	-	18 (2.1)	(N.m)
	Terminal Torque		30 (3.4)	-	40 (4.6)	
	Vertical Pull		-	-	80	lbf.in
	2 inch. Lever Pull		-	-	35	

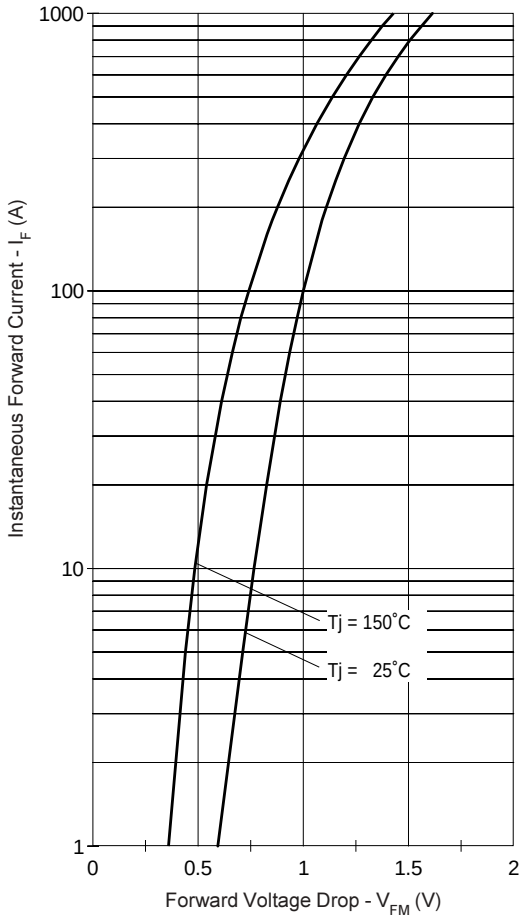

Fig. 1 - Typical Forward Voltage Drop vs. Instantaneous Forward Current (per Leg)

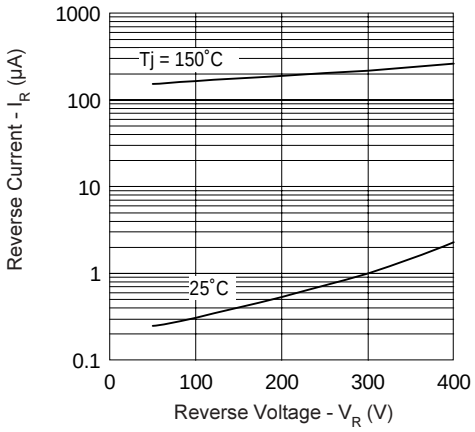

Fig. 2 - Typical Reverse Current vs. Reverse Voltage (per Leg)

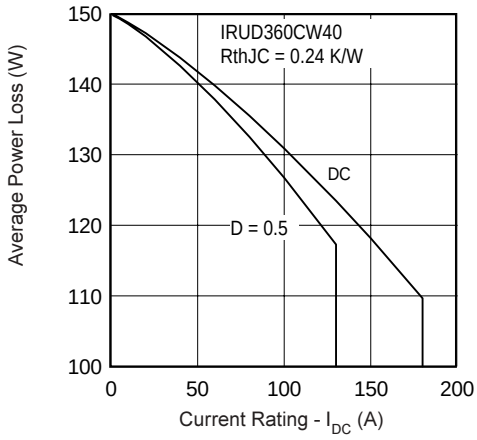

Fig. 3 - Max. Current Rating Capability (per Module)

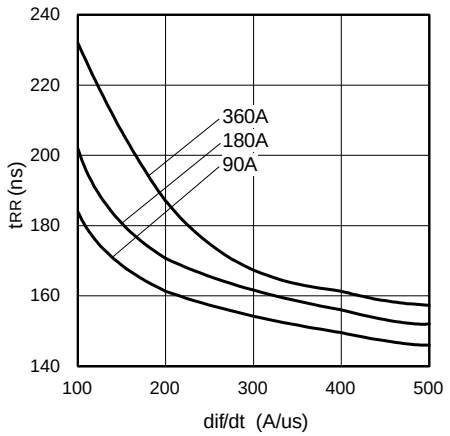

Fig. 4 - Typical Reverse Recovery vs. di_f/dt
Tj = 125°C (per Leg)

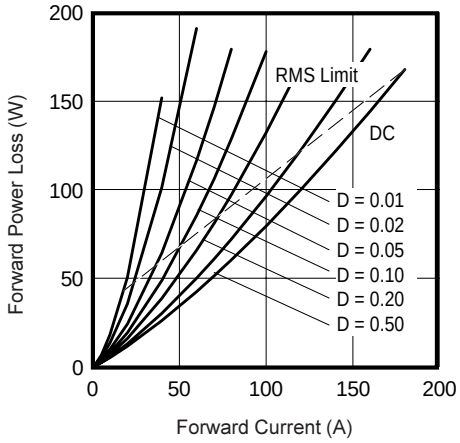

Fig. 5 - Forward Power Loss Characteristics

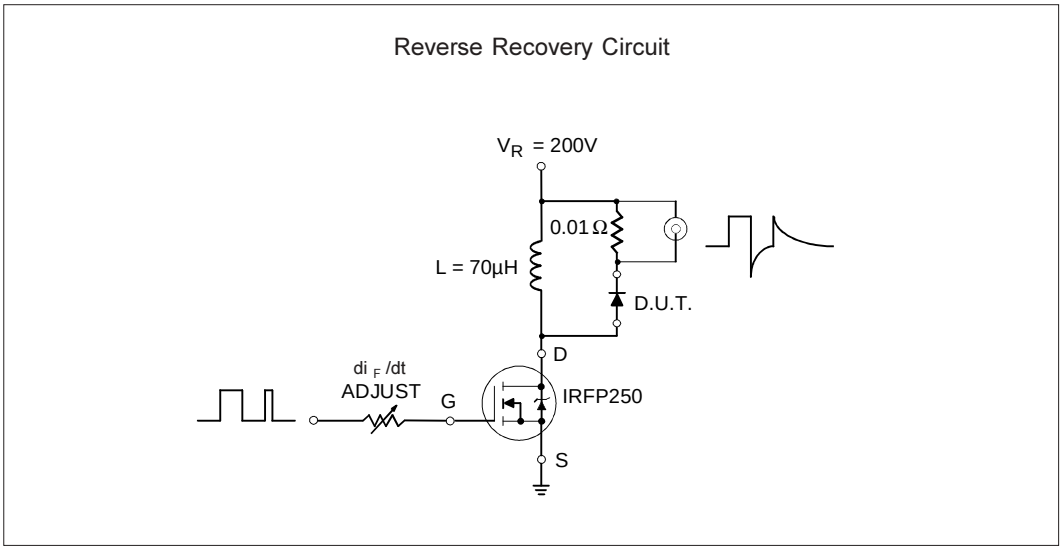

Fig. 6- Reverse Recovery Parameter Test Circuit

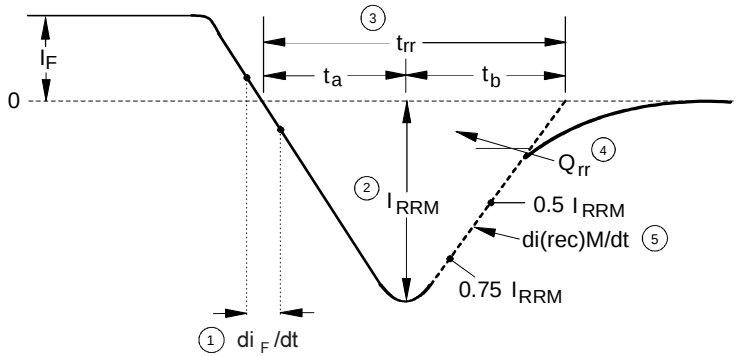

1. di_F/dt - Rate of change of current through zero crossing

2. I_{RRM} - Peak reverse recovery current

3. t_{rr} - Reverse recovery time measured from zero crossing point of negative going I_F to point where a line passing through 0.75 I_{RRM} and 0.50 I_{RRM} extrapolated to zero current

4. Q_{rr} - Area under curve defined by t_{rr} and I_{RRM}

$$Q_{rr} = \frac{t_{rr} \times I_{RRM}}{2}$$

5. $di_{(rec)M}/dt$ - Peak rate of change of current during t_b portion of t_{rr}

Fig. 7 - Reverse Recovery Waveform and Definitions

Outline Table

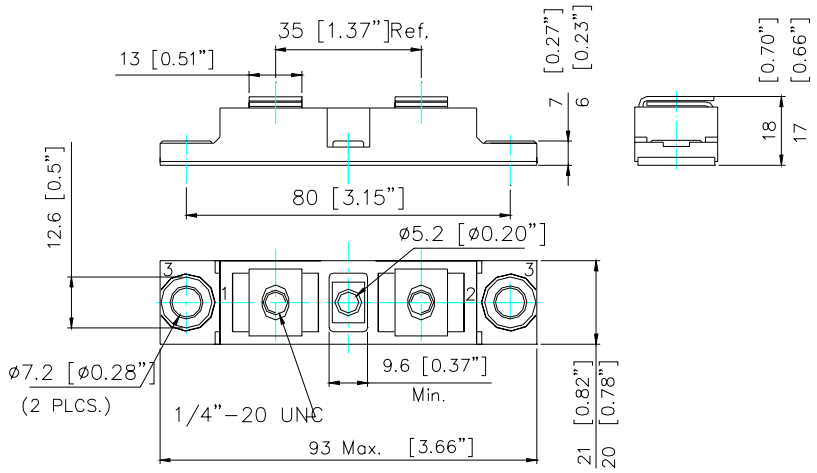

Conforms to JEDEC Outline TO-244
Dimensions in millimeters and (inches)

Ordering Information Table

Device Code

IR	UD	360	C	W	40
1	2	3	4	5	6

1	-	**International Rectifier**	
2	-	Type of Device Indicator:	**UD = HEXFRED Gen.2**
3	-	Current Rating indicator x1 :	**360 = 360A**
4	-	Circuit Configuration Indicator:	**C = Common Cathode**
5	-	Type of Device Indicator:	**W = TO-244 Wire Bondable Not Isolated**
6	-	Voltage Rating indicator x10 :	**40 = 400V**

Data and specifications subject to change without notice.
This product has been designed and qualified for Industrial Level.
Qualification Standards can be found on IR's Web site.

International IOR Rectifier

IR WORLD HEADQUARTERS: 233 Kansas St., El Segundo, California 90245, USA Tel: (310) 252-7105
TAC Fax: (310) 252-7309
Visit us at www.irf.com for sales contact information. 10/02