查询NJU3712供应商 捷多邦，专业PCB打样工厂，24小时加急出货

8-BIT SERIAL TO PARALLEL CONVERTER

■ GENERAL DESCRIPTION

The NJU3712 is an 8-bit serial to parallel converter especially apply to MPU outport expander.

The effective outport assignment of MPU is available as the connection between NJU3712 and MPU is required only 4 lines.

Up to 5MHz signal can be input to the serial data input terminal and the data is output from parallel output buffer through serial in parallel out shift register and parallel data latches.

Furthermore, the NJU3712 output the serial data from SO terminal through the shift register, therefore output bit number can increase by cascade connection.

The hysteresis input circuit realized wide noise margin and high driverbility output buffer (25mA) can drive LED directly.

■ PACKAGE OUTLINE

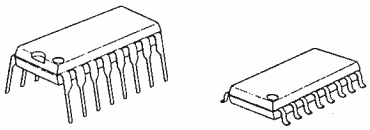

NJU3712D NJU3712M

■ FEATURES

- 8-Bit Serial In Parallel Out
- Cascade Connection
- Hysteresis Input ---- 0.5V typ
- Operating Voltage ---- 5V±10%
- Operating Frequency ---- 5MHz or more
- Output Current ---- 25mA
- C-MOS Technology
- Package Outline ---- DIP/DMP 16

■ PIN CONFIGURATION

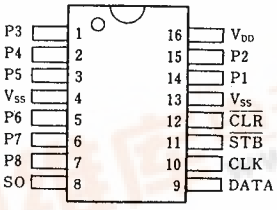

■ BLOCK DIAGRAM

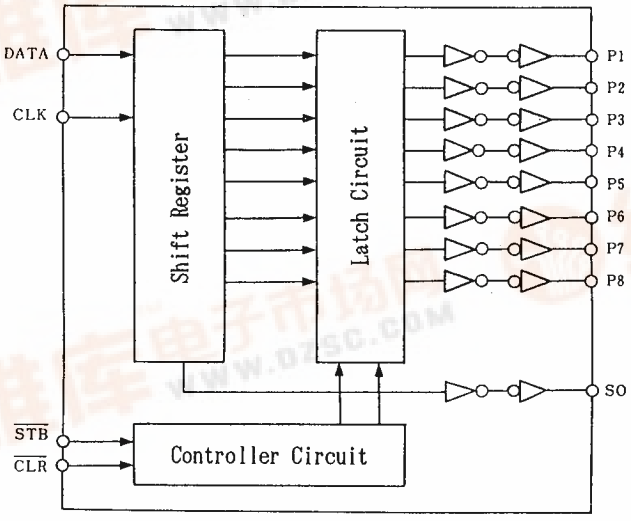

找PDF 维库一下 pdf.dzsc.com

■ TERMINAL DESCRIPTION

NO.	SYMBOL	FUNCTION	NO.	SYMBOL	FUNCTION
1	P3	Parallel Converts Data Output Terminals	9	DATA	Serial Data Input Terminal
2	P4		10	CLK	Clock Signal Input Terminal
3	P5		11	$\overline{STB}$	Strove Signal Input Terminal
4	V_{SS}	GND	12	$\overline{CLR}$	Clear Signal Input Terminal
5	P6	Parallel Converts Data Output Terminals	13	V_{SS}	GND
6	P7		14	P1	Parallel Converts Data Output Terminals
7	P8		15	P2	
8	SO	Serial Data Output Terminal	16	V_{DD}	Power Supply Terminal

■ FUNCTIONAL DESCRIPTION

(1) **Reset**

When the "L" level is input to the $\overline{CLR}$ terminal, all latches are reset and all parallel conversion output are "L" level.

Normally, the $\overline{CLR}$ terminal should be "H" level.

(2) **Data Transmission**

In the $\overline{STB}$ terminal is "H" level and input the clock signal to the CLK terminal, the serial data input from DATA terminal shift in the shift register by synclonizing at rising edge of the clock signal.

When the $\overline{STB}$ terminal change to "L" level, the data in the shift register transfer to the latch.

Even if the $\overline{STB}$ terminal is "L" level, the input clock signal shift the data in the shift register, therefore, the clock signal control is needed.

(3) **Cascade Connection**

The serial data input from DATA terminal output from the SO terminal through internal shift register unrelated the $\overline{CLR}$ and $\overline{STB}$ status.

Furthermore, the 4 input terminals have a hysteresis characteristics by using the schmitt trigger structure to protect the noise.

CLK	$\overline{STB}$	$\overline{CLR}$	OPERATION
X	X	L	All latch are reset (the data in the shift register is no change). All of Parallel convert output are "L".
↑	H	H	The serial data input from DATA terminal input to the shift register. In this stage, the data in the latch is no change.
L	L	H	The data in the shift register transfer to the latch. And the data in the latch output from parallel output.
H			
↑			The CLK input in the $\overline{STB}$="L" and $\overline{CLR}$="H" state, the data shift in the shift register and latched data also change in accordance with the shift register.

Note) X: Don't care

■ TIMING CHART

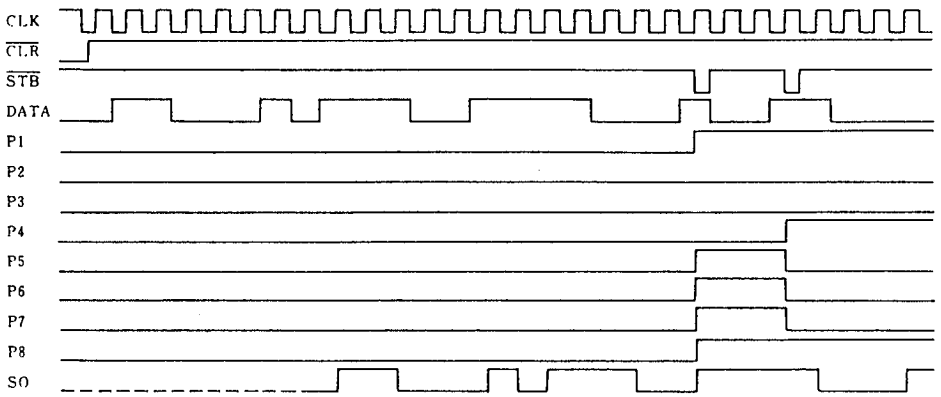

■ ABSOLUTE MAXIMUM RATINGS

(Ta=25°C)

PARAMETER	SYMBOL	RATINGS	UNIT
Supply Voltage Range	V_{DD}	− 0.5 ~ + 7.0	V
Input Voltage Range	V_I	V_{SS}−0.5 ~ V_{DD}+0.5	V
Output Voltage Range	V_O	V_{SS}−0.5 ~ V_{DD}+0.5	V
Output Current	I_O	±25	mA
Power Dissipation	P_D	700 (DIP) 300 (DMP)	mW
Operating Temperature Range	Topr	−25 ~ +85	°C
Storage Temperature Range	Tstg	−65 ~ +150	°C

■ DC ELECTRICAL CHARACTERISTICS

(V_{DD}=4.5～5.5V, V_{SS}=0V, Ta=25℃)

PARAMETER		SYMBOL	CONDITION		MIN	TYP	MAX	UNIT
Operating Current		I_{DDS}	V_{IH}=V_{DD}, V_{IL}=V_{SS}				0.1	mA
Output Voltage	High-Level	V_{OH}	I_{OH}=-0.4mA	SO Terminal	4.0		V_{DD}	V
	Low-Level	V_{OL}	I_{OL}=+3.2mA		V_{SS}		0.4	
Input Voltage	High-Level	V_{IH}			0.7V_{DD}		V_{DD}	V
	Low-Level	V_{IL}			V_{SS}		0.3V_{DD}	
Input Leakage Current		I_{LI}	V_I=0～V_{DD}		-10		10	μA
High-Level Output Voltage		V_{OHD}	I_{OH}=-25mA	P1～P8 Terminals (Note 1)	V_{DD}-1.5		V_{DD}	V
			I_{OH}=-15mA		V_{DD}-1.0		V_{DD}	
			I_{OH}=-10mA		V_{DD}-0.5		V_{DD}	
Low-Level Output Voltage		V_{OLD}	I_{OL}=+25mA		V_{SS}		1.5	V
			I_{OL}=+15mA		V_{SS}		0.8	
			I_{OL}=+10mA		V_{SS}		0.4	
Output Short Current		I_{OS}	V_O=7V, V_I=0V	SO Terminal (Note 2)			10	mA
			V_O=0V, V_I=7V				-10	
		I_{OSD}	V_O=7V, V_I=0V	P1～P8 Terminals (Note 2)			20	mA
			V_O=0V, V_I=7V				-20	

Note 1) Specified value represent output current per pin. When use, total current consideration and less than power dissipation rating operation should be required.
Note 2) V_{DD}=7V, V_{SS}=0V, 1 second per pin.

■ SWITCHING CHARACTERISTICS

(V_{DD}=4.5V～5.5V, V_{SS}=0V, Ta=-20～75℃)

PARAMETER	SYMBOL	CONDITION	MIN	TYP	MAX	UNIT
Set-Up Time	t_{SD}	DATA - CLK	20			ns
Hold Time	t_{HD}	CLK - DATA	20			ns
Set-Up Time	t_{SSTB}	$\overline{STB}$ - CLK	30			ns
Hold Time	t_{HSTB}	CLK - $\overline{STB}$	30			ns
Output Delay Time	$t_{pd\ O}$	CLK - SO			70	ns
	$t_{pd\ PCK}$	CLK - P1～P8			100	ns
	$t_{pd\ PSTB}$	$\overline{STB}$ - P1～P8			80	ns
	$t_{pd\ PCLR}$	$\overline{CLR}$ - P1～P8			80	ns
Max. Operating Frequency	f_{MAX}		5			MHz

＊) C_{OUT}=50pF

■ SWITCHING CHARACTERISTICS TEST WAVEFORM

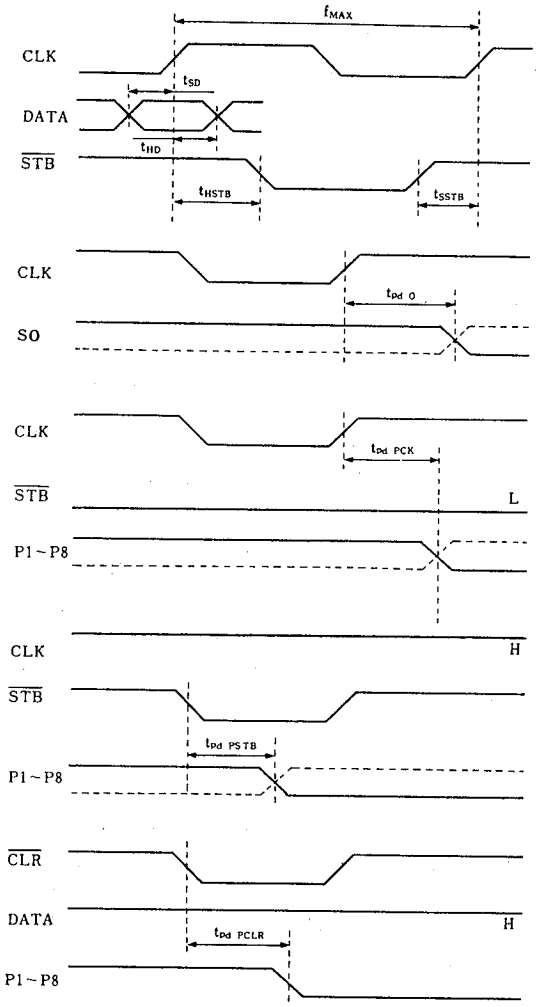

■ APPLICATION CIRCUIT (1)

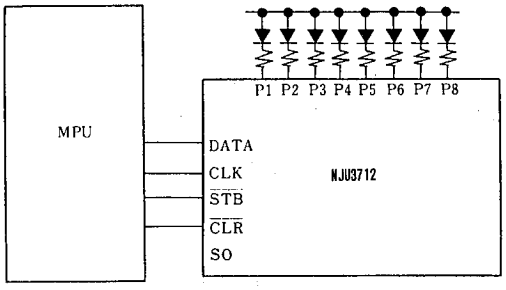

■ APPLICATION CIRCUIT (2) (Combined with NJU3711)

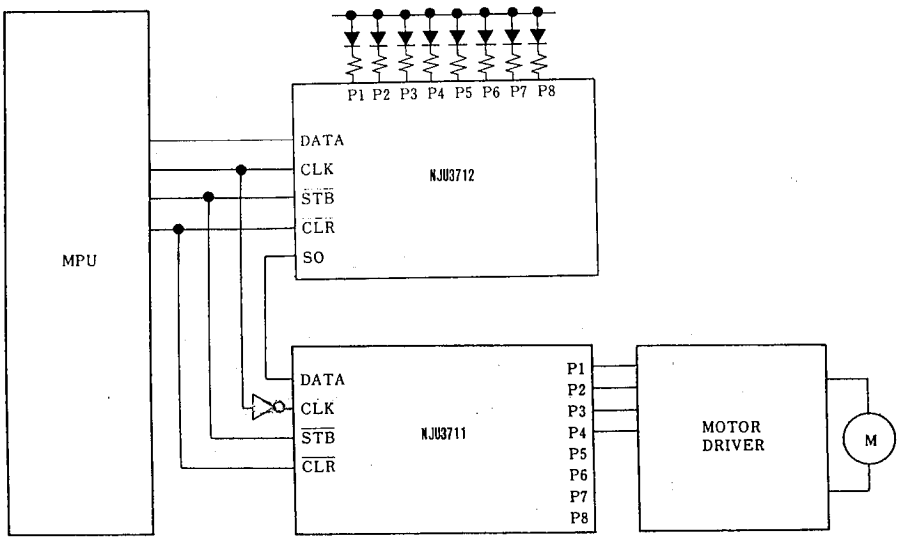

MEMO

[CAUTION]
The specifications on this databook are only given for information , without any guarantee as regards either mistakes or omissions. The application circuits in this databook are described only to show representative usages of the product and not intended for the guarantee or permission of any right including the industrial rights.