查询2SK1933供应商 捷多邦，专业PCB打样工厂，24小时加急出货

# 2SK1933

Silicon N-Channel MOS FET

HITACHI

## Application

High speed power switching

## Features

- Low on-resistance
- High speed switching
- No secondary breakdown
- Suitable for Switching regulator

## Outline

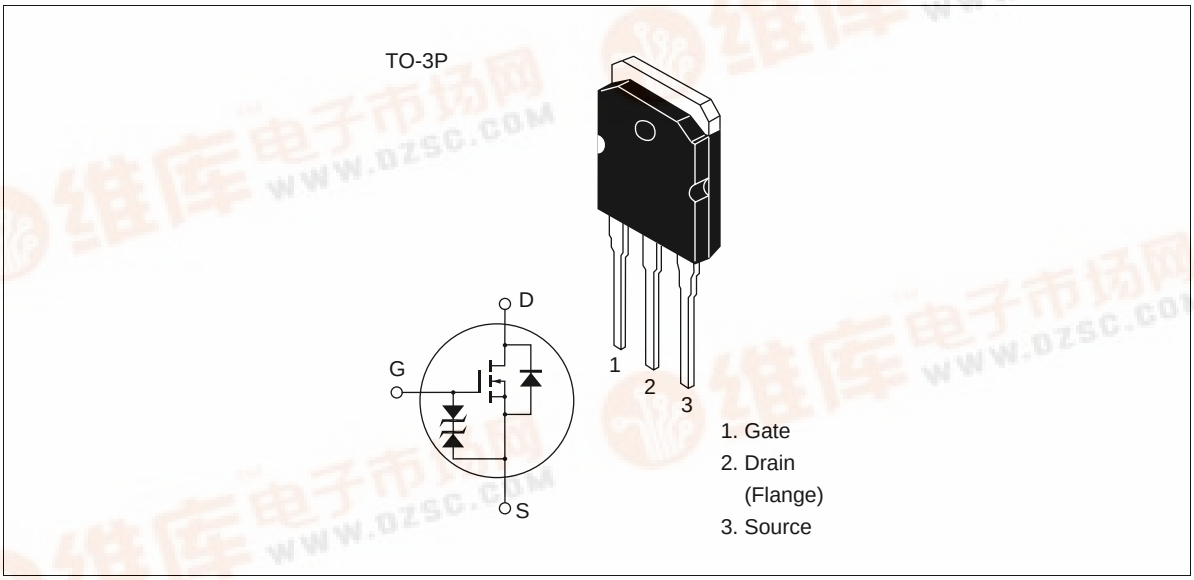


找PDF 维库一下 pdf.dzsc.com

Hitachi

## Absolute Maximum Ratings (Ta = 25°C)

| Item | Symbol | Ratings | Unit |
|---|---|---|---|
| Drain to source voltage | $V_{DSS}$ | 900 | V |
| Gate to source voltage | $V_{GSS}$ | ±30 | V |
| Drain current | $I_D$ | 10 | A |
| Drain peak current | $I_{D(pulse)}$ *1 | 30 | A |
| Body to drain diode reverse drain current | $I_{DR}$ | 10 | A |
| Channel dissipation | Pch*2 | 150 | W |
| Channel temperature | Tch | 150 | °C |
| Storage temperature | Tstg | –55 to +150 | °C |

Notes 1. PW ≤ 10 µs, duty cycle ≤ 1 %
2. Value at Tc = 25°C

## Electrical Characteristics (Ta = 25°C)

| Item | Symbol | Min | Typ | Max | Unit | Test conditions |
|---|---|---|---|---|---|---|
| Drain to source breakdown voltage | $V_{(BR)DSS}$ | 900 | — | — | V | $I_D$ = 10 mA, $V_{GS}$ = 0 |
| Gate to source breakdown voltage | $V_{(BR)GSS}$ | ±30 | — | — | V | $I_G$ = ±100 µA, $V_{DS}$ = 0 |
| Gate to source leak current | $I_{GSS}$ | — | — | ±10 | µA | $V_{GS}$ = ±25 V, $V_{DS}$ = 0 |
| Zero gate voltage drain current | $I_{DSS}$ | — | — | 250 | µA | $V_{DS}$ = 720 V, $V_{GS}$ = 0 |
| Gate to source cutoff voltage | $V_{GS(off)}$ | 2.0 | — | 3.0 | V | $I_D$ = 1 mA, $V_{DS}$ = 10 V |
| Static drain to source on state resistance | $R_{DS(on)}$ | — | 0.9 | 1.2 | Ω | $I_D$ = 5 A<br>$V_{GS}$ = 10 V*[1] |
| Forward transfer admittance | $\|y_{fs}\|$ | 4.5 | 7 | — | S | $I_D$ = 5 A<br>$V_{DS}$ = 20 V*[1] |
| Input capacitance | Ciss | — | 2620 | — | pF | $V_{DS}$ = 10 V |
| Output capacitance | Coss | — | 830 | — | pF | $V_{GS}$ = 0 |
| Reverse transfer capacitance | Crss | — | 320 | — | pF | f = 1 MHz |
| Turn-on delay time | $t_{d(on)}$ | — | 30 | — | ns | $I_D$ = 5 A |
| Rise time | $t_r$ | — | 140 | — | ns | $V_{GS}$ = 10 V |
| Turn-off delay time | $t_{d(off)}$ | — | 285 | — | ns | $R_L$ = 6 Ω |
| Fall time | $t_f$ | — | 170 | — | ns | |
| Body to drain diode forward voltage | $V_{DF}$ | — | 0.9 | — | V | $I_F$ = 10 A, $V_{GS}$ = 0 |
| Body tp drain diode reverse recovery time | $t_{rr}$ | — | 1600 | — | ns | $I_F$ = 10 A, $V_{GS}$ = 0,<br>$di_F$ / dt = 100 A / µs |

Note 1. Pulse Test

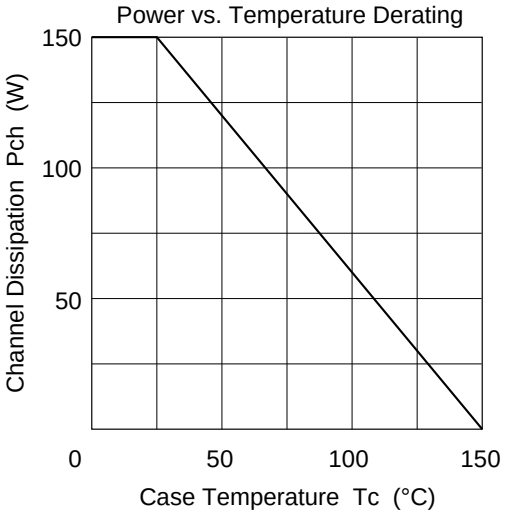
Power vs. Temperature Derating
Channel Dissipation Pch (W)
150
100
50
0
50
100
150
Case Temperature Tc (°C)

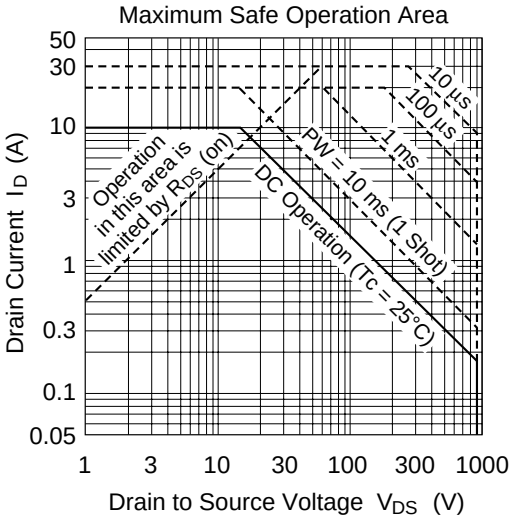
Maximum Safe Operation Area
Drain Current $I_D$ (A)
50
30
10
3
1
0.3
0.1
0.05
1
3
10
30
100
300
1000
Drain to Source Voltage $V_{DS}$ (V)
Operation in this area is limited by $R_{DS}$ (on)
10 µs
100 µs
1 ms
PW = 10 ms (1 Shot)
DC Operation (Tc = 25°C)

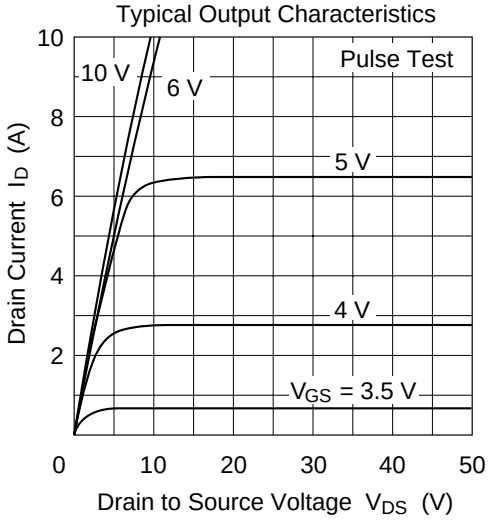
Typical Output Characteristics
Drain Current $I_D$ (A)
10
8
6
4
2
0
10
20
30
40
50
Drain to Source Voltage $V_{DS}$ (V)
Pulse Test
10 V
6 V
5 V
4 V
$V_{GS}$ = 3.5 V

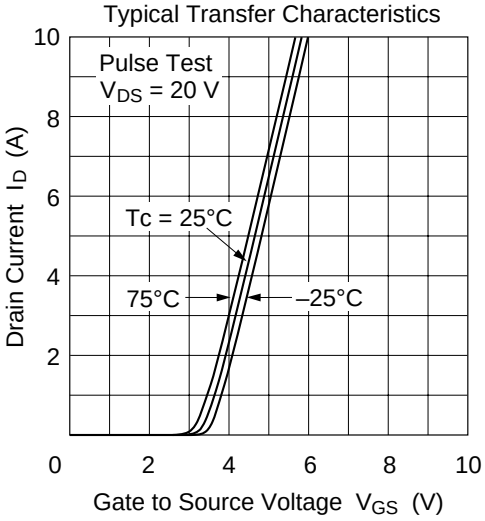
Typical Transfer Characteristics
Drain Current $I_D$ (A)
10
8
6
4
2
0
2
4
6
8
10
Gate to Source Voltage $V_{GS}$ (V)
Pulse Test
$V_{DS}$ = 20 V
Tc = 25°C
75°C
–25°C

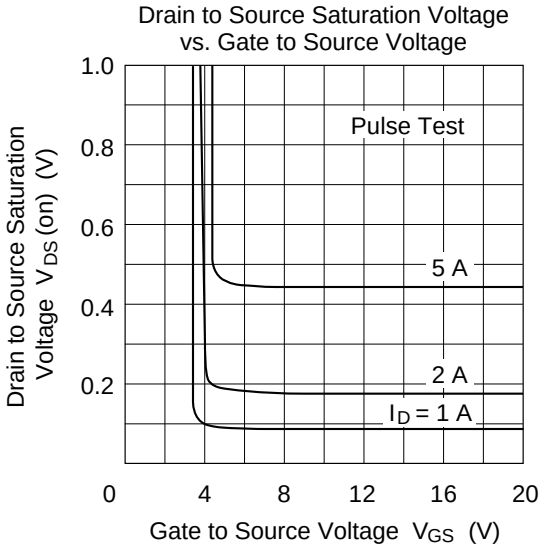
Drain to Source Saturation Voltage
vs. Gate to Source Voltage
Pulse Test
5 A
2 A
I D = 1 A
Drain to Source Saturation Voltage V DS (on) (V)
Gate to Source Voltage V GS (V)
1.0
0.8
0.6
0.4
0.2
0
4
8
12
16
20

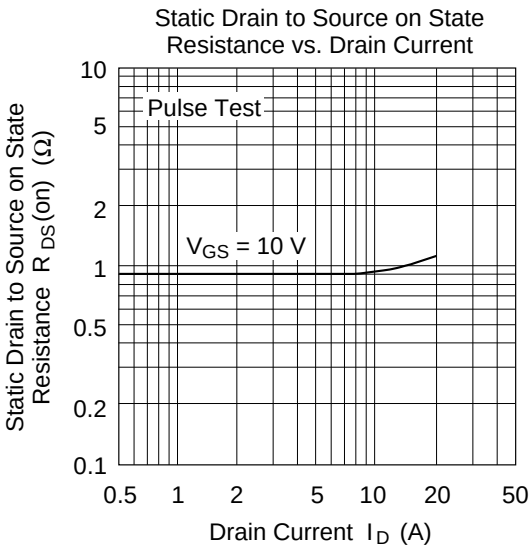
Static Drain to Source on State
Resistance vs. Drain Current
Pulse Test
V GS = 10 V
Static Drain to Source on State Resistance R DS (on) (Ω)
Drain Current I D (A)
10
5
2
1
0.5
0.2
0.1
0.5
1
2
5
10
20
50

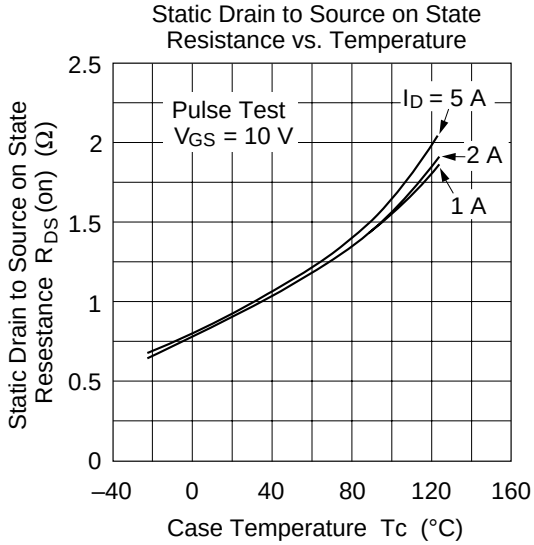
Static Drain to Source on State
Resistance vs. Temperature
Pulse Test
V GS = 10 V
I D = 5 A
2 A
1 A
Static Drain to Source on State Resestance R DS (on) (Ω)
Case Temperature Tc (°C)
2.5
2
1.5
1
0.5
0
–40
0
40
80
120
160

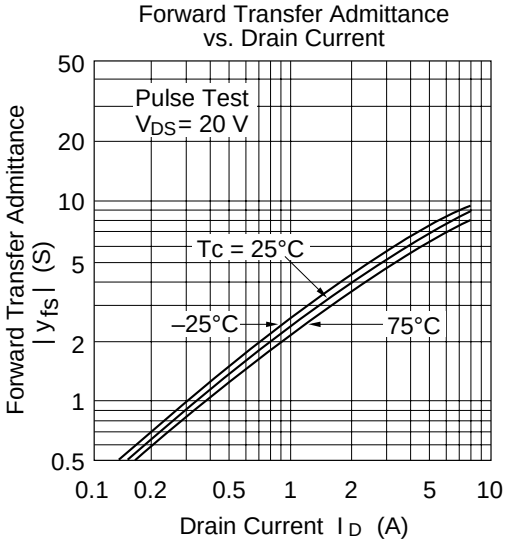
Forward Transfer Admittance
vs. Drain Current
Pulse Test
V DS = 20 V
Tc = 25°C
–25°C
75°C
Forward Transfer Admittance | y fs | (S)
Drain Current I D (A)
50
20
10
5
2
1
0.5
0.1
0.2
0.5
1
2
5
10

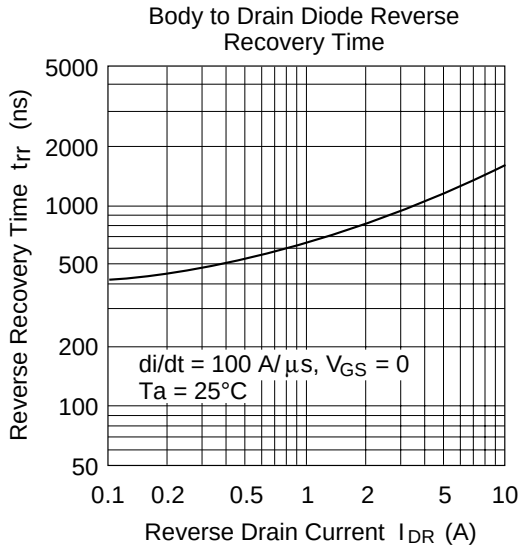
Body to Drain Diode Reverse Recovery Time
Reverse Recovery Time trr (ns)
5000
2000
1000
500
200
100
50
di/dt = 100 A/µs, VGS = 0
Ta = 25°C
0.1 0.2 0.5 1 2 5 10
Reverse Drain Current IDR (A)

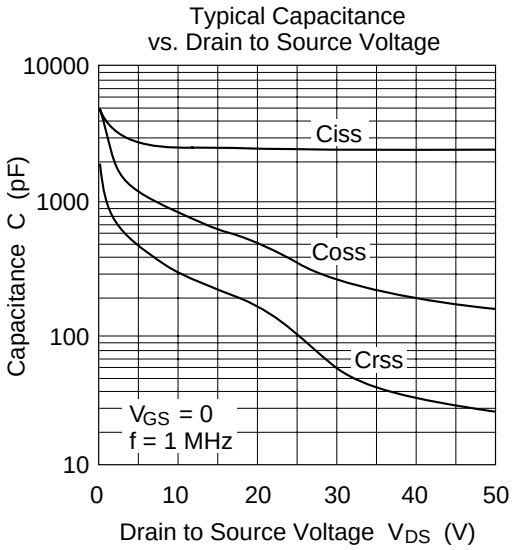
Typical Capacitance vs. Drain to Source Voltage
Capacitance C (pF)
10000
1000
100
10
Ciss
Coss
Crss
VGS = 0
f = 1 MHz
0 10 20 30 40 50
Drain to Source Voltage VDS (V)

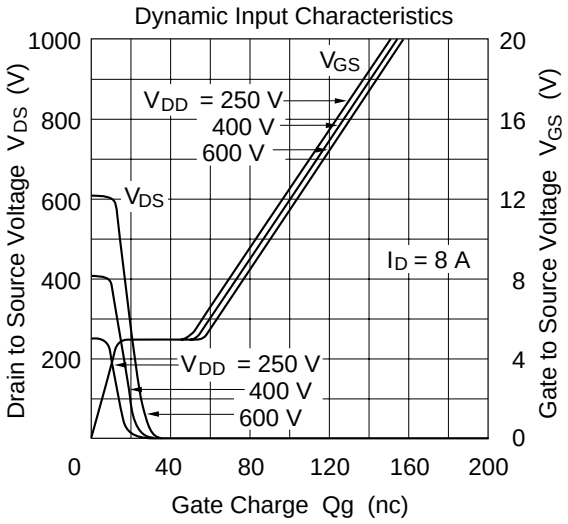
Dynamic Input Characteristics
Drain to Source Voltage VDS (V)
1000
800
600
400
200
VGS
VDD = 250 V
400 V
600 V
VDS
ID = 8 A
VDD = 250 V
400 V
600 V
Gate to Source Voltage VGS (V)
20
16
12
8
4
0
0 40 80 120 160 200
Gate Charge Qg (nc)

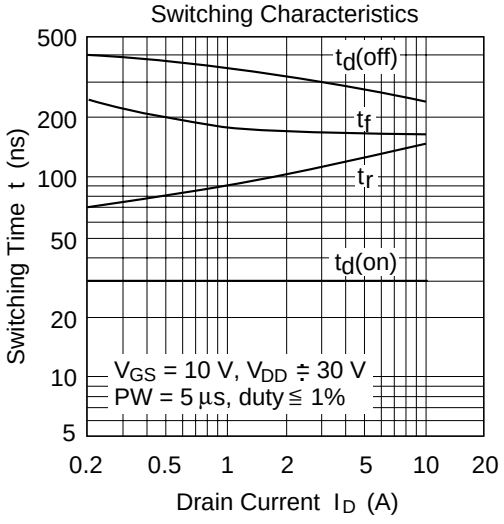
Switching Characteristics
Switching Time t (ns)
500
200
100
50
20
10
5
td(off)
tf
tr
td(on)
VGS = 10 V, VDD ≒ 30 V
PW = 5 µs, duty ≦ 1%
0.2 0.5 1 2 5 10 20
Drain Current ID (A)

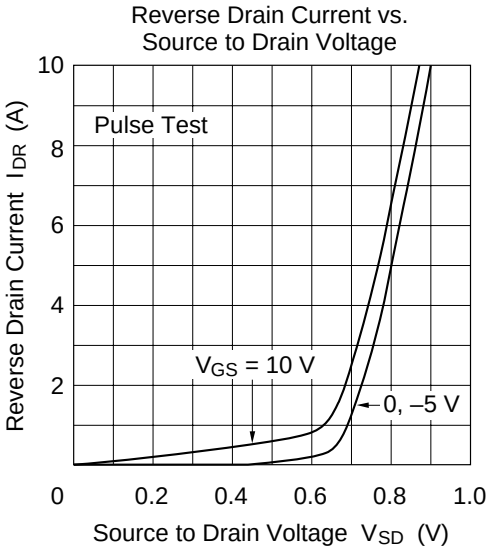
Reverse Drain Current vs.
Source to Drain Voltage
Pulse Test
$V_{GS}$ = 10 V
0, –5 V
Reverse Drain Current $I_{DR}$ (A)
Source to Drain Voltage $V_{SD}$ (V)
10
8
6
4
2
0
0.2
0.4
0.6
0.8
1.0

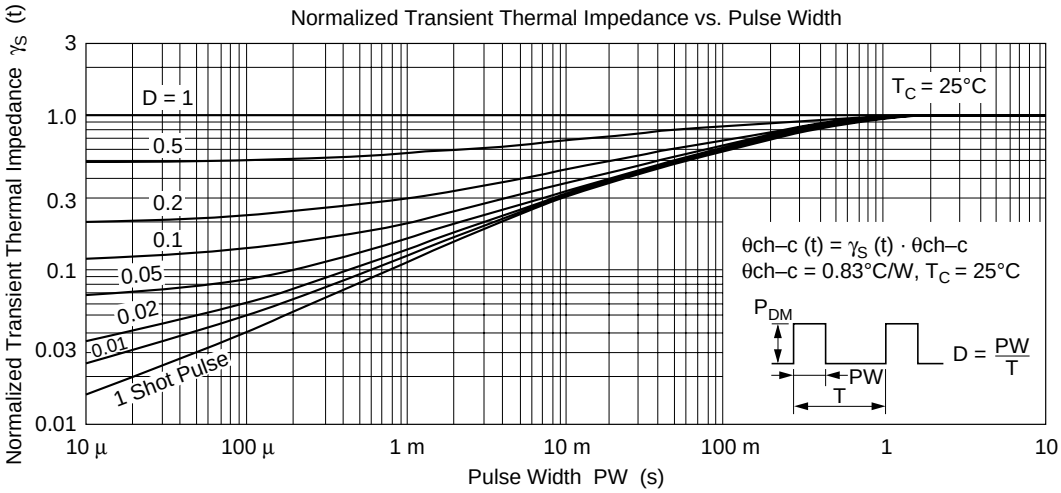
Normalized Transient Thermal Impedance vs. Pulse Width
$T_C$ = 25°C
D = 1
0.5
0.2
0.1
0.05
0.02
0.01
1 Shot Pulse
θch–c (t) = $\gamma_S$ (t) · θch–c
θch–c = 0.83°C/W, $T_C$ = 25°C
$P_{DM}$
PW
T
D = PW/T
Normalized Transient Thermal Impedance $\gamma_S$ (t)
Pulse Width PW (s)
3
1.0
0.3
0.1
0.03
0.01
10 μ
100 μ
1 m
10 m
100 m
1
10

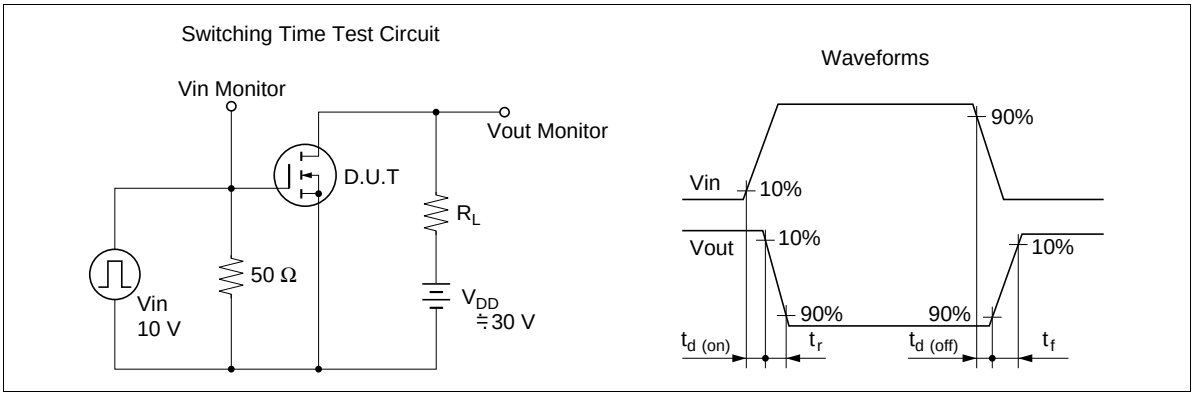
Switching Time Test Circuit
Vin Monitor
Vout Monitor
D.U.T
$R_L$
50 Ω
Vin
10 V
$V_{DD}$
≒30 V
Waveforms
Vin
10%
90%
Vout
10%
10%
90%
90%
$t_{d\ (on)}$
$t_r$
$t_{d\ (off)}$
$t_f$

Unit: mm

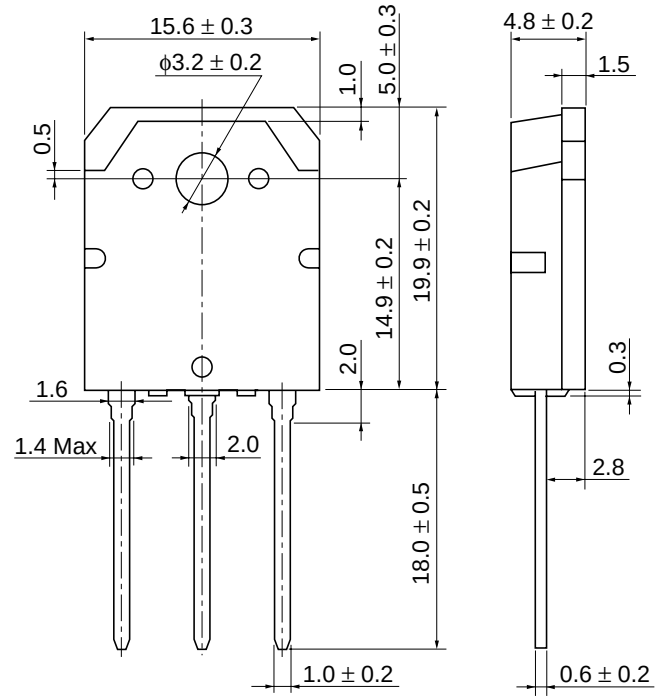
15.6 ± 0.3
ϕ3.2 ± 0.2
1.0
5.0 ± 0.3
0.5
14.9 ± 0.2
19.9 ± 0.2
2.0
1.6
1.4 Max
2.0
18.0 ± 0.5
1.0 ± 0.2
4.8 ± 0.2
1.5
0.3
2.8
0.6 ± 0.2

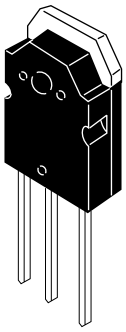

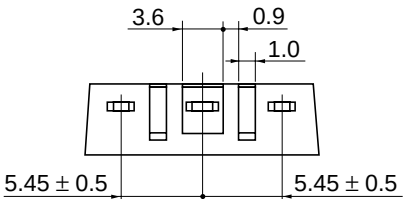
3.6
0.9
1.0
5.45 ± 0.5
5.45 ± 0.5

## Cautions

1. Hitachi neither warrants nor grants licenses of any rights of Hitachi's or any third party's patent, copyright, trademark, or other intellectual property rights for information contained in this document. Hitachi bears no responsibility for problems that may arise with third party's rights, including intellectual property rights, in connection with use of the information contained in this document.
2. Products and product specifications may be subject to change without notice. Confirm that you have received the latest product standards or specifications before final design, purchase or use.
3. Hitachi makes every attempt to ensure that its products are of high quality and reliability. However, contact Hitachi's sales office before using the product in an application that demands especially high quality and reliability or where its failure or malfunction may directly threaten human life or cause risk of bodily injury, such as aerospace, aeronautics, nuclear power, combustion control, transportation, traffic, safety equipment or medical equipment for life support.
4. Design your application so that the product is used within the ranges guaranteed by Hitachi particularly for maximum rating, operating supply voltage range, heat radiation characteristics, installation conditions and other characteristics. Hitachi bears no responsibility for failure or damage when used beyond the guaranteed ranges. Even within the guaranteed ranges, consider normally foreseeable failure rates or failure modes in semiconductor devices and employ systemic measures such as fail-safes, so that the equipment incorporating Hitachi product does not cause bodily injury, fire or other consequential damage due to operation of the Hitachi product.
5. This product is not designed to be radiation resistant.
6. No one is permitted to reproduce or duplicate, in any form, the whole or part of this document without written approval from Hitachi.
7. Contact Hitachi's sales office for any questions regarding this document or Hitachi semiconductor products.


HITACHI

**Hitachi, Ltd.**
Semiconductor & Integrated Circuits.
Nippon Bldg., 2-6-2, Ohte-machi, Chiyoda-ku, Tokyo 100-0004, Japan
Tel: Tokyo (03) 3270-2111 Fax: (03) 3270-5109

| | | | |
|---|---|---|---|
| URL | NorthAmerica | : | http:semiconductor.hitachi.com/ |
| | Europe | : | http://www.hitachi-eu.com/hel/ecg |
| | Asia (Singapore) | : | http://www.has.hitachi.com.sg/grp3/sicd/index.htm |
| | Asia (Taiwan) | : | http://www.hitachi.com.tw/E/Product/SICD_Frame.htm |
| | Asia (HongKong) | : | http://www.hitachi.com.hk/eng/bo/grp3/index.htm |
| | Japan | : | http://www.hitachi.co.jp/Sicd/indx.htm |

**For further information write to:**

Hitachi Semiconductor
(America) Inc.
179 East Tasman Drive,
San Jose,CA 95134
Tel: <1> (408) 433-1990
Fax: <1>(408) 433-0223

Hitachi Europe GmbH
Electronic components Group
Dornacher Stra§e 3
D-85622 Feldkirchen, Munich
Germany
Tel: <49> (89) 9 9180-0
Fax: <49> (89) 9 29 30 00

Hitachi Europe Ltd.
Electronic Components Group.
Whitebrook Park
Lower Cookham Road
Maidenhead
Berkshire SL6 8YA, United Kingdom
Tel: <44> (1628) 585000
Fax: <44> (1628) 778322

Hitachi Asia Pte. Ltd.
16 Collyer Quay #20-00
Hitachi Tower
Singapore 049318
Tel: 535-2100
Fax: 535-1533

Hitachi Asia Ltd.
Taipei Branch Office
3F, Hung Kuo Building. No.167,
Tun-Hwa North Road, Taipei (105)
Tel: <886> (2) 2718-3666
Fax: <886> (2) 2718-8180

Hitachi Asia (Hong Kong) Ltd.
Group III (Electronic Components)
7/F., North Tower, World Finance Centre,
Harbour City, Canton Road, Tsim Sha Tsui,
Kowloon, Hong Kong
Tel: <852> (2) 735 9218
Fax: <852> (2) 730 0281
Telex: 40815 HITEC HX


Copyright ' Hitachi, Ltd., 1999. All rights reserved. Printed in Japan.