查询KA386供应商 捷多邦，专业PCB打样工厂，24小时加急出货

INTRODUCTION

The KA386B/BD/BS is a power amplifier designed for use in low voltage consumer applications. The gain is internally set to 20 to keep the external part count low, but the addition of an external resistor and Capacitor between Pin 1 and 8 will increase the gain to any value up to 200.

8–DIP–300

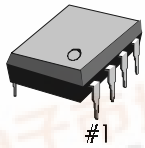

8–SOP–225

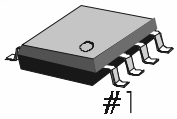

9–SIP

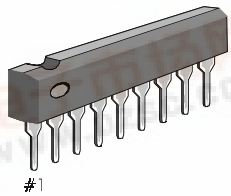

FEATURES

- Battery operation
- Minimum external parts
- Wide supply voltage range:
  4V ~ 12V (KA386B)
  4V ~ 9V (KA386BS/D)
- Low quiescent current drain (4mA)
- Voltage gains: 20 ~ 200dB
- Ground referenced Input
- Self-centering output quiescent voltage
- Low distortion
- 3 different of package types
  KA386B (8 DIP), KA386BS (9 SIP), KA386BD (8 SOP)

ORDERING INFORMATION

Device	Package	Operating Temperature
KA386B	8–DIP–300	–20°C~ + 70°C
KA386BS	9–SIP	
KA386BD	8–SOP–225	

找PDF pdf.dzsc.com

BLOCK DIAGRAM

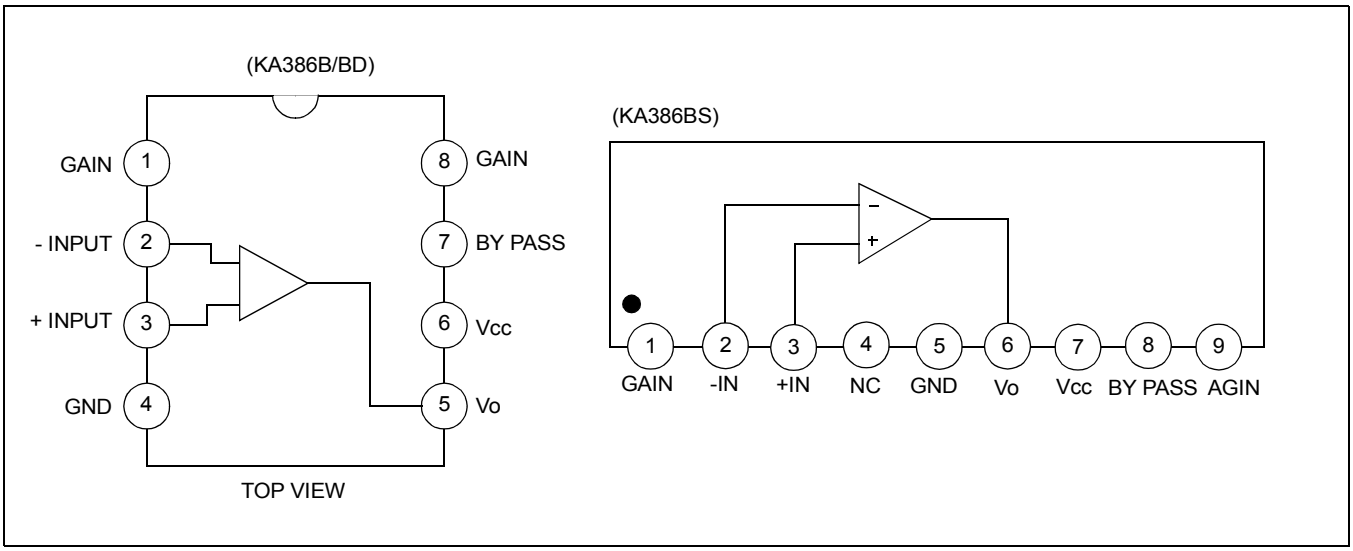

Figure 1.

ABSOLUTE MAXIMUM RATINGS (Ta = 25°C)

Characteristic		Symbol	Value	Unit
Supply Voltage		V_{CC}	15	V
Power Dissipation	KA386B	P_D	660	mW
	KA386BS		500	
	KA386BD		300	
Input Voltage		V_I	± 0.4	V
Operating Temperature		T_{OPR}	-20~+70	°C
Storage Temperature		T_{STG}	-40 ~ + 125	°C

ELECTRICAL CHARACTERISTICS

(Ta = 25°C, V_{CC} = 6V, R_L = 8Ω, f = 1kHz, unless otherwise specified)

Characteristic	Symbol	Test Conditions	Min.	Typ.	Max.	Unit
Quiescent Circuit Current	I_{CCQ}	V_I = 0	–	4	8	mA
Output Power	P_O	V_{CC} = 6 V, THD = 10% V_{CC} = 9 V, THD = 10%	250 500	325 200	–	mW mW
Voltage Gain	G_V	Pins 1 and 8 Open 10F from Pin 1 to 8	–	26 46	–	dB
Bandwidth	BW	Pins 1 and 8 Open 10μF from Pin 1 to 8	–	300 60	–	kHz
Total Harmonic Distortion (D-Type)	THD	P_O = 125 mW, Pins 1 and 8 Open	–	0.2	–	%
Input Resistance	R_I	–	–	50	–	kΩ
Input Bias Current	I_{BIAS}	Pins 1 and 8 Open	–	250	–	nA

APPLICATION CIRCUIT

Amplifier with Gain = 50 (34 dB)

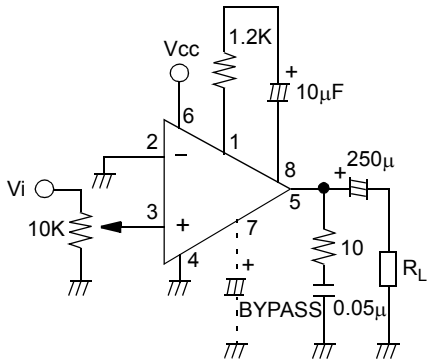

Figure 2.

NOTES