查询KMZ43T供应商 捷多邦，专业PCB打样工厂，24小时加急出货

DISCRETE SEMICONDUCTORS

DATA SHEET

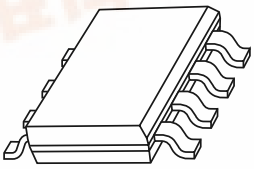

KMZ43T
Magnetic field sensor

Product specification
Supersedes data of 2003 Mar 26

2003 Sep 15

Philips Semiconductors

找PDF 维库一下 pdf.dzsc.com

DESCRIPTION

The KMZ43T is a sensitive magnetic field sensor, employing the magnetoresistive effect of thin-film permalloy. The sensor contains two galvanic separated Wheatstone bridges, at a relative angle of 45° to one another.

A rotating magnetic field in the x-y plane will produce two independent sinusoidal output signals, one a function of +cos(2α) and the second a function of +sin(2α), α being the angle between sensor and field direction (see Fig.3). Unlike the KMZ41[(1)], which needs a saturation field strength of 100 kA/m, the KMZ43T is suited to high precision angle measurement applications under low field conditions (saturation field strength 25 kA/m).

The sensor can be operated at any frequency between DC and 1 MHz.

The information in application notes AN00023 (Contactless Angle Measurement Using KMZ41 and UZZ9000) and AN00004 (Contactless Angle Measurement Using KMZ41 and UZZ9001) is applicable to the KMZ43T, but one should be aware of the difference in the bridge 1 output.

(1) The KMZ41 delivers a +sin(2α) and a –cos(2α) signal.

PINNING

PIN	SYMBOL	DESCRIPTION
1	$-V_{O1}$	output voltage bridge 1
2	$-V_{O2}$	output voltage bridge 2
3	V_{CC2}	supply voltage bridge 2
4	V_{CC1}	supply voltage bridge 1
5	$+V_{O1}$	output voltage bridge 1
6	$+V_{O2}$	output voltage bridge 2
7	GND2	ground 2
8	GND1	ground 1

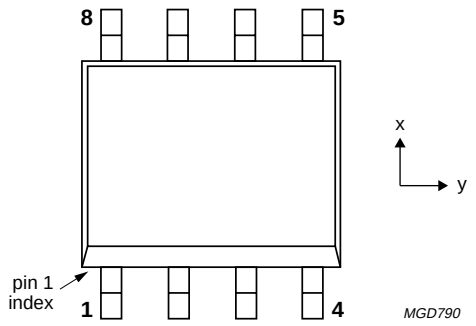

Fig.1 Simplified outline SOT96-1.

QUICK REFERENCE DATA

SYMBOL	PARAMETER	MIN.	TYP.	MAX.	UNIT
Per bridge					
V_{CC}	supply voltage	–	5	9	V
S	sensitivity (α_2 = 0°; α_1 = 135°)	2.1	2.35	2.6	mV/°
V_{offset}	offset voltage per supply voltage	–2	–	+2	mV/V
R_{bridge}	bridge resistance per bridge	2.7	3.2	3.7	kΩ

CIRCUIT DIAGRAM

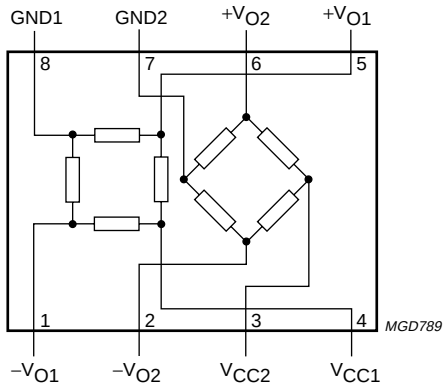

Fig.2 Simplified circuit diagram.

LIMITING VALUES

In accordance with the Absolute Maximum Rating System (IEC 60134).

SYMBOL	PARAMETER	CONDITIONS	MIN.	MAX.	UNIT
V_{CC1}	supply voltage bridge 1		–	9	V
V_{CC2}	supply voltage bridge 2		–	9	V
T_{stg}	storage temperature		–65	+150	°C
T_{amb}	operating ambient temperature		–40	+150	°C

STIMULATING FIELD STRENGTH

CONDITIONS	MIN.	CONDITIONS	MIN.	MAX.	UNIT
H_{ext}	magnetic field strength	note 1	25	–	kA/m

Note

1. The minimum stimulating magnetic field in the x-y plane to ensure minimum angular inaccuracy specified in note 11 to Characteristics table.

THERMAL CHARACTERISTICS

SYMBOL	PARAMETER	VALUE	UNIT
$R_{th\ j\text{-}a}$	thermal resistance from junction to ambient	155	K/W

CHARACTERISTICS

T_{amb} = 25 °C and H_{ext} = 25 kA/m; V_{CC1} = 5 V; V_{CC2} = 5 V; unless otherwise specified.

SYMBOL	PARAMETER	CONDITIONS	MIN.	TYP.	MAX.	UNIT
ω	operating angular velocity		0	–	1	MHz
k	amplitude synchronism	note 9	99.5	100	100.5	%
TC_k	temperature coefficient of amplitude synchronism	T_{amb} = –40 to +150 °C; note 10	–0.01	0	–0.01	%/K
$\Delta\alpha$	angular inaccuracy	note 11	0	0.05	0.1	deg
Per bridge						
V_{CC}	supply voltage		–	5	9	V
V_{offset}	offset voltage per supply voltage	see Fig.3	–2	0	+2	mV/V
S	sensitivity	open circuit; note 1				
		α_1 = 135° (bridge 1)	2.1	2.35	2.6	mV/°
		α_2 = 0° (bridge 2)	2.1	2.35	2.6	mV/°
TC_S	temperature coefficient of sensitivity	T_{amb} = –40 to +150 °C; note 2	–0.25	–0.29	–0.33	%/K
V_{peak}	peak output voltage	note 3; see Fig.3	60	67	75	mV
TC_{Vpeak}	temperature coefficient of peak output voltage	T_{amb} = –40 to +150 °C; note 4	–0.25	–0.29	–0.33	%/K
R_{bridge}	bridge resistance	note 5	2.7	3.2	3.7	kΩ
$TC_{Rbridge}$	temperature coefficient of bridge resistance	T_{amb} = –40 to +150 °C; note 6	0.28	0.32	0.35	%/K
$TC_{Voffset}$	temperature coefficient of offset voltage	T_{amb} = –40 to +150 °C; note 7; see Fig.3	–4	0	+4	(μV/V)/K
FH	hysteresis of output voltage	note 8	0	0.05	0.18	%FS

Notes

1. Sensitivity changes with angle due to sinusoidal output.
2. $TC_S = 100 \times \frac{S_{T_2} - S_{T_1}}{S_{T_1} \times 190°C}$ where T_1 = –40 °C; T_2 = 150 °C.
3. $V_{peak} = |(V_{out\,max} - V_{offset})|$. Periodicity of V_{peak}: sin(2α) and cos(2α) respectively.
4. $TC_{Vpeak} = 100 \times \frac{V_{peak(T_2)} - V_{peak(T_1)}}{V_{peak(T_1)} \times 190°C}$ where T_1 = –40 °C; T_2 = 150 °C.
5. Bridge resistance between pins 8 and 4, pins 7 and 3, pins 5 and 1, and pins 6 and 2.
6. $TC_{Rbridge} = 100 \times \frac{R_{bridge(T_2)} - R_{bridge(T_1)}}{R_{bridge(T_1)} \times 190°C}$ where T_1 = –40 °C; T_2 = 150 °C.
7. $TC_{Voffset} = \frac{V_{offset(T_2)} - V_{offset(T_1)}}{190°C}$ where T_1 = –40 °C; T_2 = 150 °C.

8. $FH_1 = 100 \times \left| \frac{V_{O1(67.5°)\ 135° \Rightarrow 45°} - V_{O1(67.5°)\ 45° \Rightarrow 135°}}{2 \times V_{peak1}} \right|$.

   $FH_2 = 100 \times \left| \frac{V_{O2(22.5°)\ 90° \Rightarrow 0°} - V_{O2(22.5°)\ 0° \Rightarrow 90°}}{2 \times V_{peak2}} \right|$.

9. $k = 100 \times \frac{V_{peak1}}{V_{peak2}}$.

10. $TC_k = 100 \times \frac{k_{T_2} - k_{T_1}}{k_{T_1} \times 190°C}$ where $T_1 = -40$ °C; $T_2 = 150$ °C.

11. $\Delta\alpha = |\alpha_{real} - \alpha_{measured}|$ without offset voltage influences due to deviations from ideal sinusoidal characteristics.

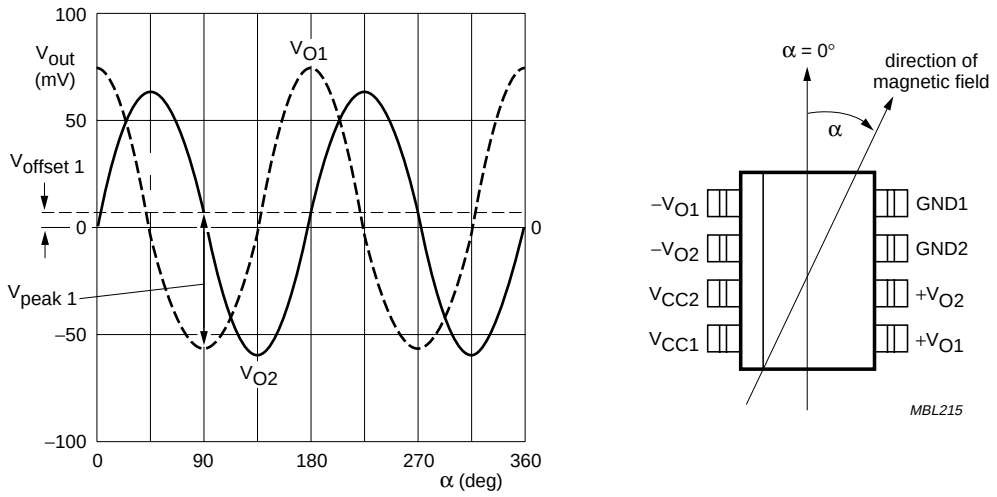

Fig.3 Output signals related to the direction of the magnetic field.

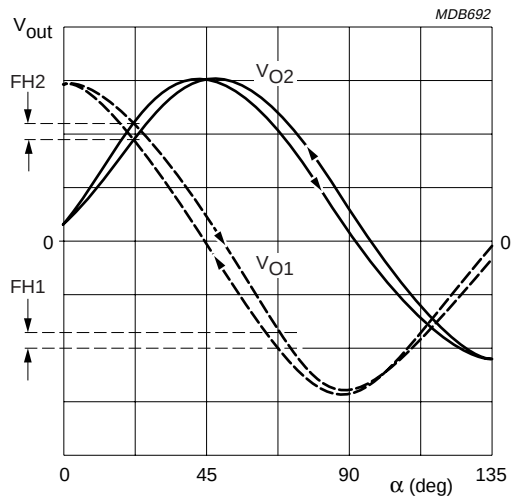

Fig.4 Definition of hysteresis.

PACKAGE OUTLINE

SO8: plastic small outline package; 8 leads; body width 3.9 mm **SOT96-1**

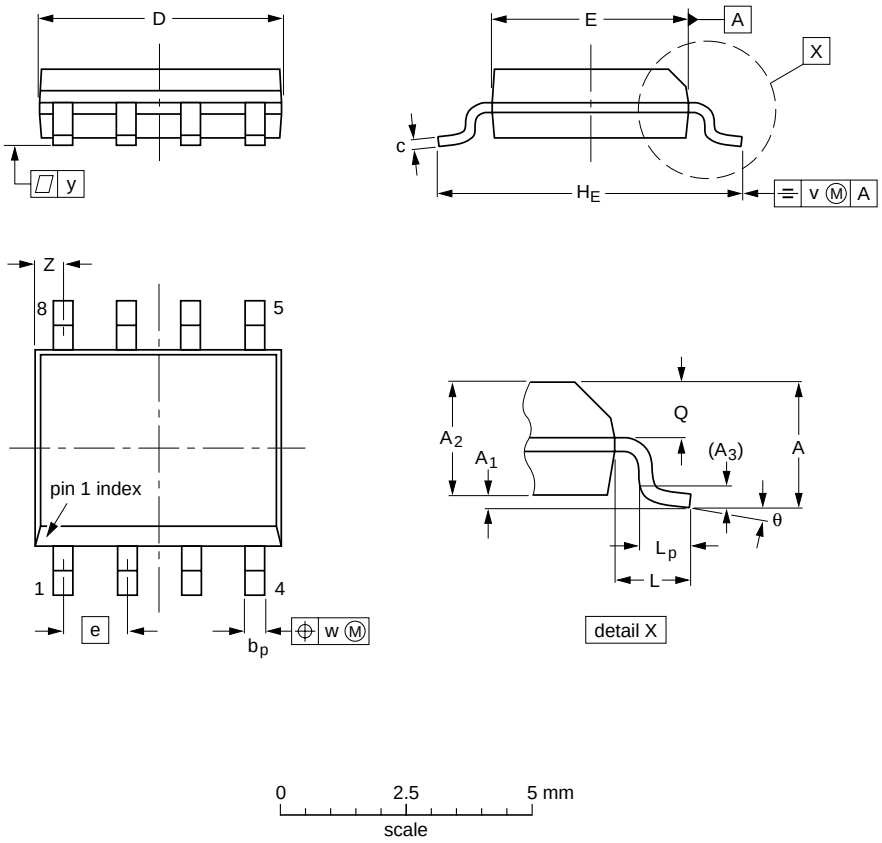

DIMENSIONS (inch dimensions are derived from the original mm dimensions)

UNIT	A max.	A_1	A_2	A_3	b_p	c	D(1)	E(2)	e	H_E	L	L_p	Q	v	w	y	Z(1)	θ
mm	1.75	0.25 0.10	1.45 1.25	0.25	0.49 0.36	0.25 0.19	5.0 4.8	4.0 3.8	1.27	6.2 5.8	1.05	1.0 0.4	0.7 0.6	0.25	0.25	0.1	0.7 0.3	8° 0°
inches	0.069	0.010 0.004	0.057 0.049	0.01	0.019 0.014	0.0100 0.0075	0.20 0.19	0.16 0.15	0.05	0.244 0.228	0.041	0.039 0.016	0.028 0.024	0.01	0.01	0.004	0.028 0.012	

Notes

1. Plastic or metal protrusions of 0.15 mm (0.006 inch) maximum per side are not included.
2. Plastic or metal protrusions of 0.25 mm (0.01 inch) maximum per side are not included.

OUTLINE VERSION	REFERENCES				EUROPEAN PROJECTION	ISSUE DATE
	IEC	JEDEC	JEITA			
SOT96-1	076E03	MS-012				~~99-12-27~~ 03-02-18

DATA SHEET STATUS

LEVEL	DATA SHEET STATUS(1)	PRODUCT STATUS(2)(3)	DEFINITION
I	Objective data	Development	This data sheet contains data from the objective specification for product development. Philips Semiconductors reserves the right to change the specification in any manner without notice.
II	Preliminary data	Qualification	This data sheet contains data from the preliminary specification. Supplementary data will be published at a later date. Philips Semiconductors reserves the right to change the specification without notice, in order to improve the design and supply the best possible product.
III	Product data	Production	This data sheet contains data from the product specification. Philips Semiconductors reserves the right to make changes at any time in order to improve the design, manufacturing and supply. Relevant changes will be communicated via a Customer Product/Process Change Notification (CPCN).

Notes

1. Please consult the most recently issued data sheet before initiating or completing a design.
2. The product status of the device(s) described in this data sheet may have changed since this data sheet was published. The latest information is available on the Internet at URL http://www.semiconductors.philips.com.
3. For data sheets describing multiple type numbers, the highest-level product status determines the data sheet status.

DEFINITIONS

Short-form specification — The data in a short-form specification is extracted from a full data sheet with the same type number and title. For detailed information see the relevant data sheet or data handbook.

Limiting values definition — Limiting values given are in accordance with the Absolute Maximum Rating System (IEC 60134). Stress above one or more of the limiting values may cause permanent damage to the device. These are stress ratings only and operation of the device at these or at any other conditions above those given in the Characteristics sections of the specification is not implied. Exposure to limiting values for extended periods may affect device reliability.

Application information — Applications that are described herein for any of these products are for illustrative purposes only. Philips Semiconductors make no representation or warranty that such applications will be suitable for the specified use without further testing or modification.

DISCLAIMERS

Life support applications — These products are not designed for use in life support appliances, devices, or systems where malfunction of these products can reasonably be expected to result in personal injury. Philips Semiconductors customers using or selling these products for use in such applications do so at their own risk and agree to fully indemnify Philips Semiconductors for any damages resulting from such application.

Right to make changes — Philips Semiconductors reserves the right to make changes in the products - including circuits, standard cells, and/or software - described or contained herein in order to improve design and/or performance. When the product is in full production (status ‘Production’), relevant changes will be communicated via a Customer Product/Process Change Notification (CPCN). Philips Semiconductors assumes no responsibility or liability for the use of any of these products, conveys no licence or title under any patent, copyright, or mask work right to these products, and makes no representations or warranties that these products are free from patent, copyright, or mask work right infringement, unless otherwise specified.

Philips Semiconductors – a worldwide company

Contact information

For additional information please visit **http://www.semiconductors.philips.com**. Fax: **+31 40 27 24825**
For sales offices addresses send e-mail to: **sales.addresses@www.semiconductors.philips.com**.

© Koninklijke Philips Electronics N.V. 2003

SCA75

All rights are reserved. Reproduction in whole or in part is prohibited without the prior written consent of the copyright owner.

The information presented in this document does not form part of any quotation or contract, is believed to be accurate and reliable and may be changed without notice. No liability will be accepted by the publisher for any consequence of its use. Publication thereof does not convey nor imply any license under patent- or other industrial or intellectual property rights.

Printed in The Netherlands 613520/03/pp9 Date of release: 2003 Sep 15 Document order number: 9397 750 11713

Let's make things better.

Philips Semiconductors

PHILIPS