查询L38812供应商 捷多邦，专业PCB打样工厂，24小时加急出货

UTC L388 12 LINEAR INTEGRATED CIRCUIT

VOICE-SWITCH CIRCUIT FOR HANDSFREE SPEAKERPHONE TAM

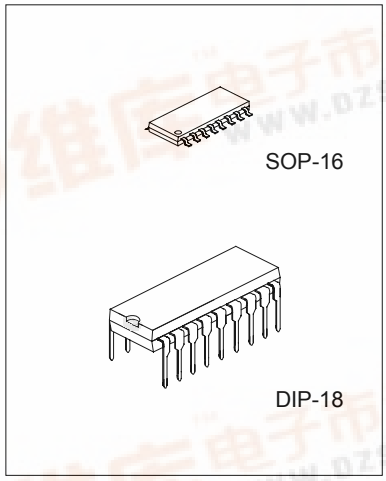

DESCRIPTION

The UTC L388 12 contains all the necessary circuitry, amplifiers, detectors, comparators and control functions to implement a high performance, voice-switched, ”hands-free” function in an answering machine.

The UTC L 388 12 is designed for answering machines that are either powered from the telephone line or from a mains powered dc. supply.

Filtering of both the audio and control signals in both transmitter and receiver channels possible.

An external loudspeaker amplifier has to be used, normally the same as used for the answering machine.

FEATURES

*Settable gain dynamics (25 or 50dB)
*Low power consumption, totally 1.0mA at 3.3V typical.
*Background noise compensation in the transmitting channel with hold function.
*Excellent noise performance.
*Both channel input amplifiers have balanced inputs.
*Minimum of external components needed for function.

PIN CONFIGURATION

16-pin SO package

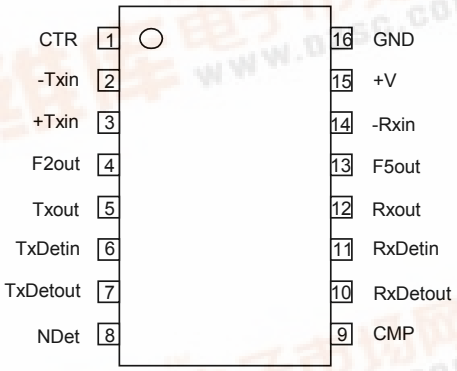

18-pin DIP package

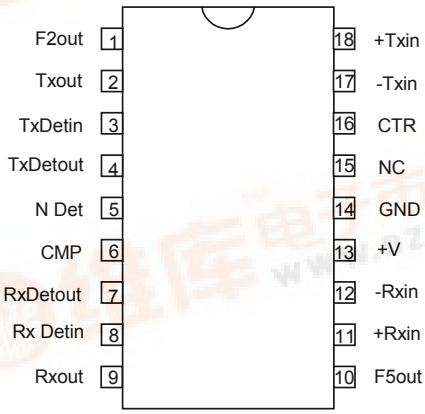

找PDF 维库一下 pdf.dzsc.com

PIN DESCRIPTIONS

16-pin SO	18-pin DIP	SYMBOL	DESCRIPTION
1	16	CTR	Control input for gain dynamics (25 or 50dB), mute and disable.
2	17	-Txin	Transmitter channel negative input. Input impedance 3kΩ.
3	18	+Txin	Transmitter channel positive input. Input impedance 100kΩ.
4	1	F2out	Output of the second amplifier in the transmitter channel.
5	2	Txout	Transmitter channel output. Min. ac load impedance 10kΩ.
6	3	TxDetin	Input of the transmitter channel signal detector. Input impedance 13kΩ.
7	4	TxDetout	Output of the transmitter channel signal detector. Goes negative referred to the internal ref. voltage of app.2V when a transmitter signal is present.
8	5	NDet	Background noise detector output. Goes positive referred to the internal ref. Voltage of app.2V when a background noise signal is present.
9	6	CMP	Comparator input.. Summing point to the different Detector outputs.
10	7	RxDetout	Output of the receiver channel signal detector. Goes positive referred to the internal ref. Voltage of app.2V when a receiver signal is present
11	8	RxDetin	Input of the receiver channel signal detector. Input impedance 13kΩ.
12	9	Rxout	Receiver channel output. Min. ac load impedance 10kΩ.
13	10	F5out	Output of the second amplifier in the receiver channel.
	11	+Rxin	Receiver channel positive input. Input impedance 140kΩ.
14	12	-Rxin	Receiver channel negative input,Input impedance 20kΩ.
15	13	V+	Supply of the speech switching circuitry. A shunt regulator, voltage apprx. 3.3V at 1.0mA.
16	14	GND	System ground.
	15	NC	Not connected.

BLOCK DIAGRAM(16-pin SO package)

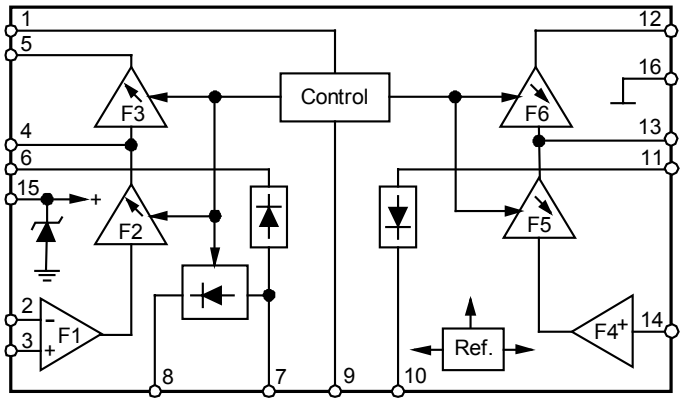

MAXIMUM RATINGS

PARAMETER	SYMBOL	RATINGS	UNIT
Speech switch supply current	I_D	10	mA
Voltage Pin 1-14		-0,5 ~ $Vpin_{15}$+0.5	V
Operating temperature	T_{opr}	-20 ~ +70	℃
Storage temperature	Tstg	-55 ~ +125	℃

TEST CIRCUIT

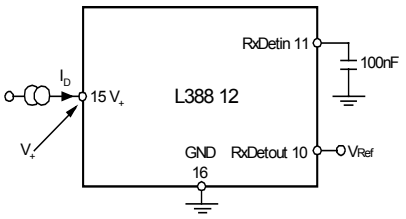

ISOLATION AND MEASUREMENT OF VRef

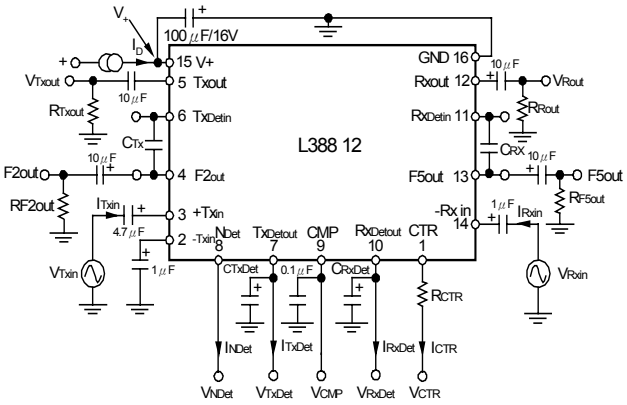

ELECTRICAL CHARACTERISTICS

(Ta=25℃,f=1kHz, R_{CTR}=0,C_{TxDet}=0,R_{Tx}out= ∞,R_{RXout}= ∞,R_{F2}out= ∞, R_{F5}out= ∞,R_{TX}=0,R_{RX}=0,C_{RxDet}=0 and I_D=1.0mA unless otherwise noted)

PARAMETER	TEST CONDITIONS	MIN	TYP	MAX	UNIT
Speech control section					
Terminal voltage, V_+	I_D=1.0mA		3.3		V
Internal reference voltage, V_{Ref}			1.96		V
Frequency response for all amplifiers	200-3400Hz,Relative 1 kHz	-1		1	dB
Transmit gain, 20 • log(V_{Txout}/V_{Txin})	V_{CMP}=V_{Ref}-0.1V	41.5	44		dB
	V_{CMP}=V_{Ref}+0.1V		-6	-3.5	dB
	V_{CMP}=V_{Ref}-0.1V R_{CTR}=100k,V_{CTR}=V+	41.5	44		dB
	V_{CMP}=V_{Ref}+0.1V R_{CTR}=100k,V_{CTR}=V+		19	21.5	dB
Receive gain, 20 • log(V_{Rxout}/V_{Rxin})	V_{CMP}=V_{Ref}+0.1V	26.5	29		dB
	V_{CMP}=V_{Ref}-0.1V		-21	-18.5	dB
	V_{CMP}=V_{Ref}+0.1V R_{CTR}=100k,V_{CTR}=V+	26.5	29		dB
	V_{CMP}=V_{Ref}-0.1V R_{CTR}=100k,V_{CTR}=V+		4	6.5	dB
Max transmit detector gain, 20 • log(V_{Txdet}/V_{Txin})	V_{TxDet}<200mV_P ,C_{TX}=100nF				
	V_{CMP}=V_{Ref}+0.1V		67.5		dB
	V_{CMP}=V_{Ref}-0.1V	37	42.5		dB
Max transmit detector gain, 20 • log(V_{Rxdet}/V_{Rxin})	V_{RxDet}<200mV_P ,C_{TX}=100nF				
	V_{CMP}=V_{Ref}+0.1V		53		dB
	V_{CMP}=V_{Ref}-0.1V	22.5	28		dB
Background noise rectifier gain,(note 1)	V_{CMP}=V_{Ref}-0.1V,C_{txdet}=1 μ F		6.0		dB
	V_{CMP}=V_{Ref+}0.1V,C_{txdet}=1 μ F		Hold		

PARAMETER	TEST CONDITIONS	MIN	TYP	MAX	UNIT
$+T_{XIn}$ input impedance		80	100	120	kΩ
$-T_{XIn}$ input impedance		2.4	3.0	3.6	kΩ
$-R_{XIn}$ input impedance		16	20	24	kΩ
T_{Xout} ac, load impedance		10			kΩ
R_{Xout} ac, load impedance		10			kΩ
$F2_{out}$ ac, load impedance		10			kΩ
$F5_{out}$ ac, load impedance		10			kΩ
Transmitter channel output swing, V_{TXOut}	2% distortion, $R_{Txout}=R_{Rxout}=25$ kΩ		500		mV_p
Receiver channel output swing, V_{RxOut}	2% distortion, $R_{Txout}=R_{Rxout}=25$ kΩ		500		mV_p
Transmitter output noise, V_{TxOut}	$V_{CMP}=V_{Ref}-0.1V, v_{TXIn}=0V$		-75		dB_{psof}
Receiver output noise, V_{RxOut}	$V_{CMP}=V_{Ref}+0.1V, v_{RXIn}=0V$		-75		dB_A
T_{XDet} sink current, $I_{TxDetOut}$	$V_{txDetIn}=V_{Ref}+0.1V$		-6.0	-2.5	mA
R_{XDet} source current, $I_{RxDetOut}$	$V_{RxIn}=V_{Ref}-0.1V$	2.5	6.0		mA
T_{XDet} source current, I_{TxDet}	$V_{CMP}=V_{Ref}-0.1V$			30	μA
R_{XDet} sink current, $I_{RxDetOut}$	$V_{RxDetIn}=V_{Ref}+0.1V$	-30			μA
T_{XDet} swing relative to V_{Ref}, $V_{TxDetOut}$	$V_{TxDetIn}=V_{Ref}+0.1V$	(note 2)	-0.7		V
R_{XDet} swing relative to V_{Ref}, $V_{RxDetOut}$	$V_{RxDetIn}=V_{Ref}-0.1V$	(note 2)	+0.7		V
N_{Det} sink current (fast charge), I_{NDet}	$V_{TxDetIn}=V_{Ref}-0.1V$ $V_{CMP}=V_{Ref}-0.1V$		-4.5	-1.5	mA
N_{Det} source current, I_{NDet}	$V_{TxDetIn}=V_{Ref}+0.1V$ $V_{CMP}=V_{Ref}+0.1V$	3	5	7	μA
N_{Det} leakage current(hold), I_{NDet}	$V_{TxDetIn}=V_{Ref}-0.1V$ $V_{CMP}=V_{Ref}+0.1V$		-100		nA
N_{Det} swing relative to V_{Ref}, V_{NDet}	$V_{CMP}=V_{Ref}-0.1V$ $V_{TxDetIn}=V_{Ref}+0.1V$		-0.45		V
CMP(comparator) sensitivity, Transmit(Tx) mode to receive (Rx) mode or vice versa	Tx mode=max Tx gain, Rx mode=max Rx gain		50	100	mV
CTR voltage for 25 dB dynamics, V_{CTR}	$V_{CMP}=V_{Ref}\pm0.35V, R_{CTR}=100$kΩ		V_+		V
CTR voltage for mute, I_{CTR}	$V_{CMP}=V_{Ref}\pm0.35V$				μA
CTR voltage for disable, V_{CTR}				0.55	V

Notes:

1. $20 \cdot \log\left(\frac{V_{NDet}-V_{Ref}}{V_{TxDet}-V_{TxDetO}}\right)$

V_{NDet}=voltage at noise detector output
V_{Ref}=reference voltage (about 1.9V)
V_{TxDet}=Voltage at transmit detector output
V_{TxDetO}=voltage at transmit detector at the point when the voltage at the noise detector starts moving when a signal at transmit channel input is gradually increased (threshold, typical value 30 mV)

2. Depends on V_+. Channels are tracking.

FUNCTIONAL DESCRIPTION SPEECH CONTROL SECTION

Transmitter and Receiver Channels

The transmitter and receiver channels consist of three amplifying stages each, F1,F2,F3 and F4,F5,F6.The inputs of the amplifiers must be ac. coupled because they are dc. vise at the internal reference voltage(≈2V) level. F1 and F4 are fixed gain amplifiers of 30,5 dB and 15.5 dB respectively, while the rest of them are of controlled gain type. The gain of F2,F3 as well as F5 and F6 is controlled by comparators. The comparator receives its information partly from the summing point of the transmitter, receiver and background noise detectors at CMP input and partly through the control input, CTR, which controls the gain dynamics (25 or 50 dB). Amplifiers F2 and F3 have the maximum gain when the transmitter channel is fully open, consequently the amplifiers F5 and F6 will have minimum gain and vice versa. See figure.1 and figure. 9.

The positive input on transmitter and the negative input on receiver channel has a rather high input impedance. It renders a good gain precision and noise performance when used with low signal source impedance. The differential input of the transmitter channel can be used to suppress unwanted signals in the microphone supply, see figure. 5.

Signal Detectors and Comparator

The signal detectors sense and rectify the receiver and microphone signals to opposite polarities referenced to the internal reference voltage of approx. 2V.The voltage at RxDet will go positive and at TxDet negative in the presence of a signal at the respective channel input. In the idle(no signal) state, the voltages at RxDet, TxDet and CMP are equal to the internal reference voltage. Signal at Txin will result in an decreasing level at TxDetout and hence also at CMP input. the transmitter channel and decrease it in the receiver channel. Signal at Rxin will do vice versa. The voltages RxDetout and TxDetout controlthus the gain setting in respective channel through the comparators using the CMP input as a summing point with an input current of less than 1 μ A. The attack time in the receiver channel is set by C2 together with C1 and either by the maximum current capability of the detector output or it with R2 added. The transmitter channel works likewise. See figure.5.

The decay time in the receiver and transmitter channels is set by C2 and C3 respectively. The resistor in the time constant is formed by an internal 200kΩ resistor in parallel with the external resistors R3 and R4 respectively. The influence of eventual R1 and R2 can be omitted.

The text above describes the case when only one channel is open at a time and there is a distinctive pause between signals at receiver and transmitter channel inputs so the circuit will have time to reach its idle state. See figure.10 A) to E). If one of the channels gets an input signal immediately after the signal has disappeared from the other channel input the effective decay time , as the CMP input sees it, will be shorter than in the first case. See figure.10 F) to G). The capacitor C4 at CMP -input sets the speed of the gain change in the transmitter and receiver channels. The capacitors C2 and C3 should be dimensioned for a charging time of 0.5-10mS and for a discharge time of 150-300mS. The question of switching times being a highly subjective proposition, is in large dependent of the language being spoken in the system , caused by the varying sound pressure picture of the different languages. A hysteresis effect is achieved in the switching since the level detectors sense the signals after F2 and F5 respectively (F2 and F5 are affected by the gain setting). For example: If the transmitter channel is open (maximum gain),a smaller signal at Txin is enough to keep the channel open than would be necessary to open it when the receiver channel is open. The output swing of the level detectors is matched for variations in the supply voltage. The detectors have a logarithmic rectifier characteristic whereby gain and sensitivity is high at small signals. There is a break point in the curve at a level of ± 200mV from the internal reference voltage app.2V,where the sensitivity for increasing input signals decreases with factor of 10, increasing the detectors dynamic range. See figure.8.

Background Noise Detector

The general function of the background noise detector in the transmitting channel is to create a positive signal (in respect to the reference) so that, when coupled to the summing point at the CMP input, will counteract the signal from the transmitter level detector representing the actual sound pressure level at the microphone. This counteracts the noise from influencing the switching characteristics. The input signal to the background noise level detector is taken from the output of the transmitter detector, a voltage representing the envelope of the amplified microphone signal. The detector inverts and amplifies this signal 2 X (transmitting mode) and has on it is output a RC network consisting of an internal resistor of 100k and an external capacitor C4.The voltage across C4 is connected to the CMP input (summing point) via a resistor R5.The resistor R6 is important in order to keep the charging current of C4 within safe limits in regard of high charge peaks that could be audible in the system. The extent to which the NDet

output will influence the potential at CMP input is set by the gain of the detector, the maximum swing and R5.If a continuous input signal is received from the microphone (>10sec.) the voltage across C4 is pulled negative(relative to the reference)with a time constant set by C4 to e.g.5 sec. A continuous input signal is thus treated as noise. Since the output of the noise detector is going negative it thereby counteracts the signal from the transmitter detector and thus helping the receiver detector signal to maintain a set relation to the transmitter detector signal If the transmitter input signal contains breaks like breath pauses the voltage at TxDetout decreases. If the voltage across C3 gets less than the inverted voltage across C4 divided by the detector gain a rapid charge of C4 towards reference will follow (all levels referred to the reference).If the breaks are frequent as in speech the background detector will not influence the switching characteristic of the system. See figure.9. There is a threshold of approx. 50mV at TxDetout to prevent the activation of background noise detection in noiseless environment. In the receiver mode some of the loudspeaker output signal will be sensed by the microphone. In order not to treat this input signal as noise, the noise detector goes into a hold state and “remembers” the level from the previous transmitting mode periode.

CTR Input

For full speech control (50dB attenuation between the channels) this input can be left unconnected. To set the function to 25dB attenuation the input has to be higher than 600mV below V+. See figure 11. To set the circuit into a mute state(results in, reduced gain in receiver channel for the DTMF confidence tone in the loudspeaker and closed transmitter channel) a voltage below Vref has to be connected to the input. By lowering the voltage at the input below 0.9V a condition will emerge where both receiver and transmitter channels are closed. See figure.4 and 9.

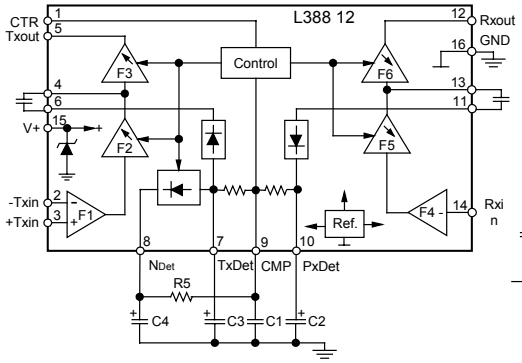

Figure 1. Passive networks setting the speech control function

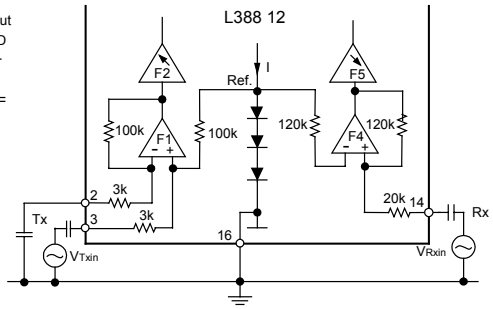

Figure 2. Receiver and transmitter channel input arrangement

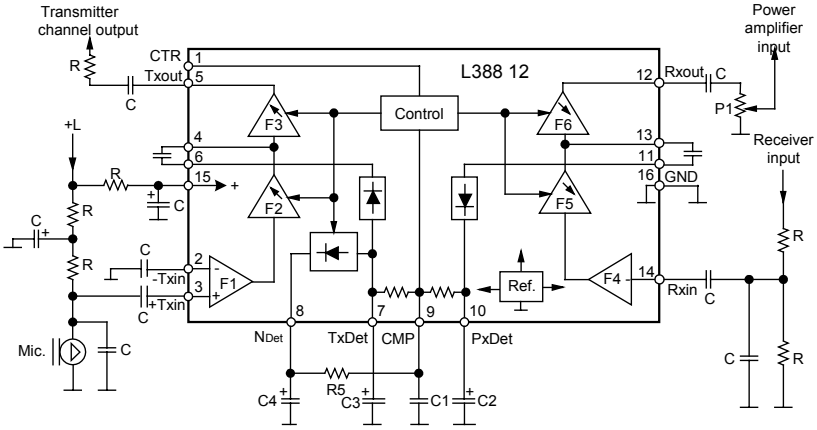

Figure 3. Speech switching arrangement

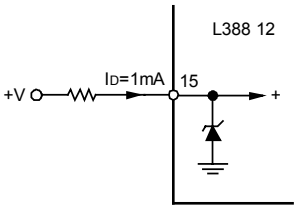

The circuit has a buit in shunt voltage generator.It needs a minimum 1mA current for its function.The voltage at this current will be 3.3V.If the voltage +V is not constant care must be taken so that the I_D will not exeed 10 mA

Figure 4. Circuit supply function

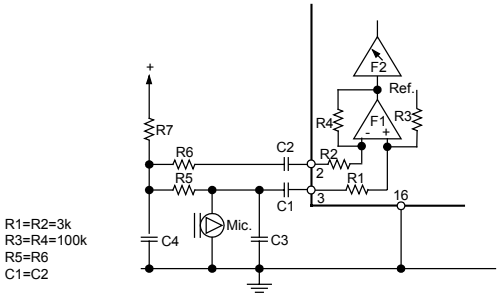

Figure 5. Transmitter channel input amplifier used to suppress ripple in the mic.supply.(CMRR).

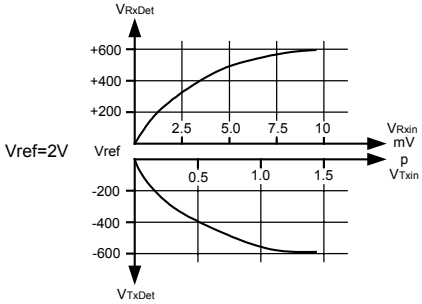

Figure 6. Transmitter and receiver channel rectifier characteristics.

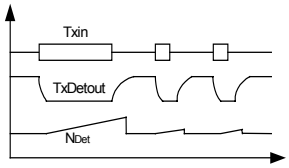

Figure 7. Relationship in timing between the voltage levels at Tx_{IN}, Tx_{Det} and N_{Det}

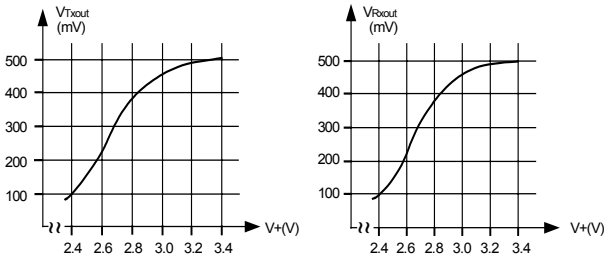

Figure 8. Transmitter and receiver channel output dynamics.

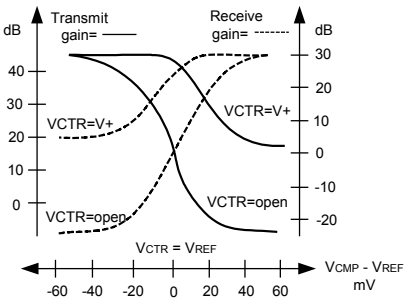

Figure 9. Transmit and reveive gain as a function of VCMP and VCTR

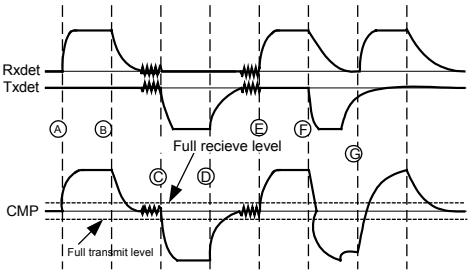

Figure 10. Timing of the transmitter and receiver channels at the CMP-input

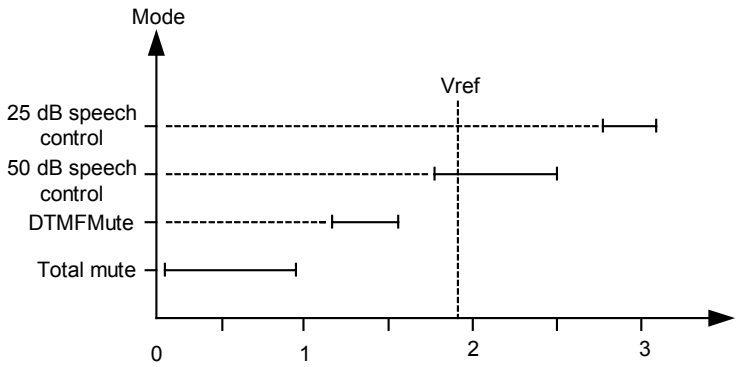

Figure 11. Control modes as function of voltage applied to gain dynamics control input CTR;I_D=1mA

UTC assumes no responsibility for equipment failures that result from using products at values that exceed, even momentarily, rated values (such as maximum ratings, operating condition ranges, or other parameters) listed in products specifications of any and all UTC products described or contained herein. UTC products are not designed for use in life support appliances, devices or systems where malfunction of these products can be reasonably expected to result in personal injury. Reproduction in whole or in part is prohibited without the prior written consent of the copyright owner. The information presented in this document does not form part of any quotation or contract, is believed to be accurate and reliable and may be changed without notice.