L9339

QUAD LOW SIDE DRIVER

- WIDE OPERATING SUPPLY VOLTAGE RANGE FROM 4.5V UP TO 32V FOR TRANSIENT 45V
- VERY LOW STANDBY QUIESCENT CURRENT < 2µA
- INPUT TO OUTPUT SIGNAL TRANSFER FUNCTION PROGRAMMABLE
- HIGH SIGNAL RANGE FROM -0.3V UP TO 32V FOR ALL INPUTS
- TTL AND CMOS COMPATIBLE INPUTS
- DEFINED OUTPUT OFF STATE FOR OPEN INPUTS
- FOUR OPEN DRAIN DMOS OUTPUTS, WITH R_{DSon} = 1.5Ω FOR V_S > 6V AT 25°C
- OUTPUT CURRENT LIMITATION
- CONTROLLED OUTPUT SLOPE FOR LOW EMI
- OVERTEMPERATURE PROTECTION FOR EACH CHANNEL
- INTEGRATED OUTPUT CLAMPING FOR FAST INDUCTIVE RECIRCULATION V_{FB} > 45V

MULTIPOWER BCD TECHNOLOGY

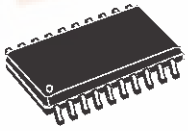

SO20 & SO20(12+4+4)

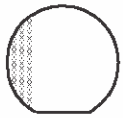

BARE DIE

ORDERING NUMBER:

L9339MD	(SO20 12+4+4)
L9339	(SO20)
L9339DIE1	(BARE DIE)

- STATUS MONITORING FOR
  - OVERTEMPERATURE
  - DISCONNECTED GROUND OR SUPPLY VOLTAGE

DESCRIPTION

The L9339 is a monolithic integrated quad low side driver. It is intended to drive lines, lamps or relais in automotive or industrial applications.

BLOCK DIAGRAM

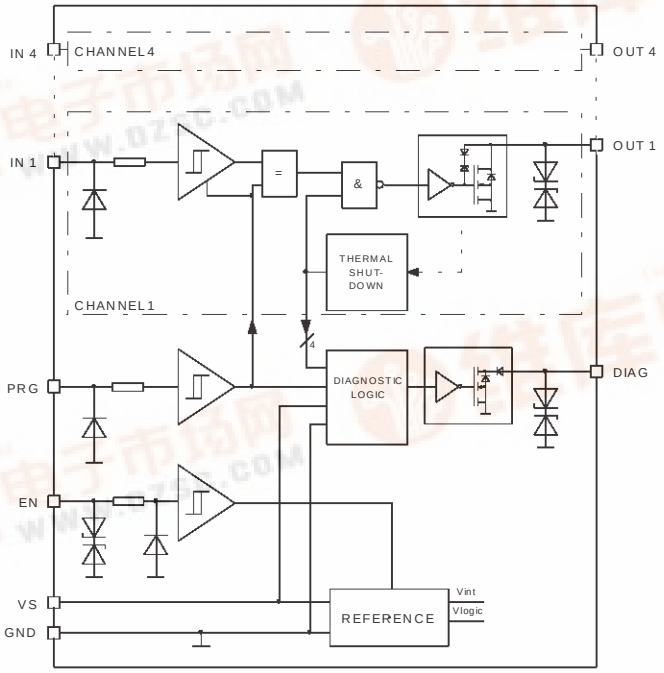

PIN CONNECTION (Top view)

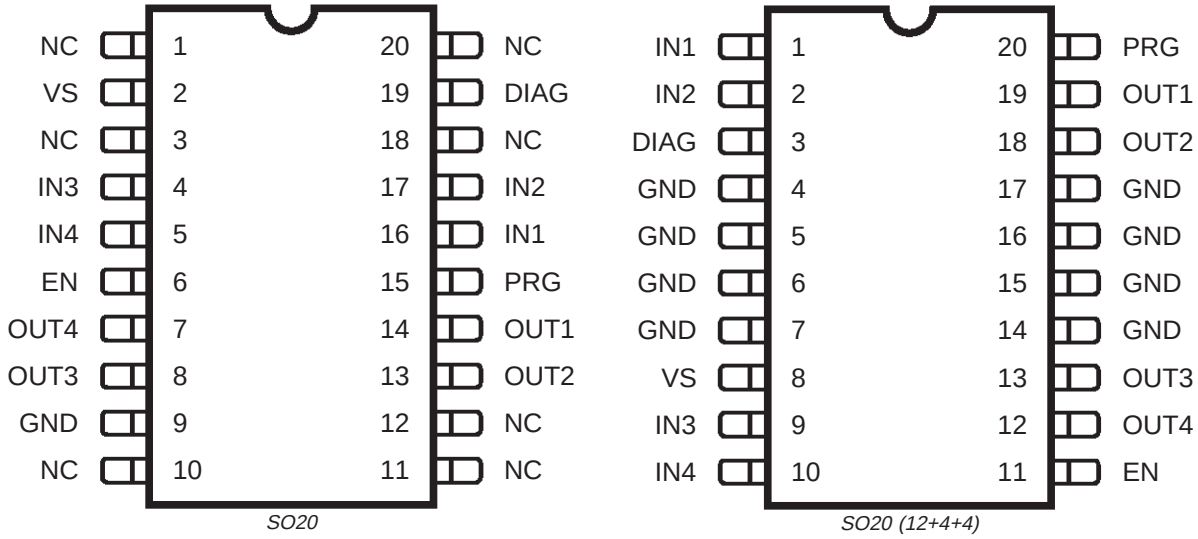

SO20 **SO20 (12+4+4)**

PIN FUNCTION

Pin Name	Description	Package	
		SO 20	SO 20 (SO 12+4+4)
VS	Supply Voltage	2	8
GND	Ground	9	4, 5, 6, 7, 14, 15, 16, 17
EN	Enable	6	11
PRG	Programing	15	20
DIAG	Diagnostic	19	3
IN 1	Input 1	16	1
IN 2	Input 2	17	2
IN 3	Input 3	4	9
IN 4	Input 4	5	10
OUT 1	OUTPUT 1	14	19
OUT 2	OUTPUT 2	13	18
OUT 3	OUTPUT 3	8	13
OUT4	OUTPUT4	7	12
NC	Not Connected	1,3,10,11,12,18,20	-

ABSOLUTE MAXIMUM RATINGS (no damage or latch)

Symbol	Parameter		Value	Unit
V_S	Supply voltage Supply voltage	DC Pulse (T ≤ 400ms)	-0.3 ... 32 -0.3 ... 45	V V
dV_S/dt	Supply voltage transient		-10 ... +10	V/µs
V_{IN}, V_{PRG}	Input, Programming Input, Programming	DC voltage Pulse (T ≤ 400ms)	-0.3 ... 32 -0.3 ... 45	V V
I_{IN}	Negative input current		-10	mA
V_{EN}	Enable voltage Enable voltage	DC Pulse (T ≤400ms)	-24 ... 32 -24 ... 45	V V
V_{OUT}	Output voltage		-0.3 ... 45 [1)]	V
I_{OUT}	Negative output current Positive output current		-1 internal limited	A
V_{DIAG}	Diagnostic output voltage Diagnostic output voltage	DC Pulse (T ≤ 400ms)	-0.3 ... 32 -0.3 ... 45	V V

Notes: 1. In flyback phase the output voltage can reach 60V.
ESD according to MIL 883C; tested at 2KV; corresponds to maximum energy dissipation 0.2mJ.

THERMAL DATA

Symbol	Parameter	Min.	Typ.	Max.	Unit.
T_{JSDon}	Temperature shutdown switch-on-threshold	160		200	°C
T_{JSDoff}	Temperature shutdown switch-off-threshold	140		180	°C

SO 12+4+4

$R_{th\ j\text{-}pin}$	Thermal resistance junction to pins			15	°C/W
$R_{th\ j\text{-}amb}$	Thermal resistance junction to ambient [2)]			50	°C/W

SO 20

$R_{th\ j\text{-}amb}$	Thermal resistance junction to ambient [3)]			97	°C/W

2. With 6cm^2 on board heat sink area.
3. Mounted on SMPCB2 board

ELECTRICAL CHARACTERISTCS

The electrical characteristics are valid within the below defined Operating Conditions, unless otherwise specified. The function is guaranteed by design until T_{JSDon} switch-on-threshold.

V_S Supply voltage 4.5 V to 32 V

T_j Junction temperature -40 °C to 150 °C

T_{amb} Ambient Temperature -40 °C to 125 °C

Note: Ambient test temperature = -40 °C to 125 °C

Symbol	Parameter	Test Condition	Min.	Typ.	Max.	Unit
SUPPLY:						
I_Q	Quiescent current	-0.3V ≤ V_{EN} ≤ 0.5V; V_S = 14 V; T_a ≤ 125 °C		<2	10	µA
		-0.3V ≤ V_{EN} ≤ 0.5V; V_S = 14 V; T_a ≤ 150 °C			50	µA
		V_{EN} ≥ 3.2V; V_S ≤ 14V		1.5	2	mA
Inputs, IN1 - IN4; Programming, PRG:						
V_{INlow}	Input voltage LOW		-0.3		2.0	V
V_{INhigh}	Input voltage HIGH		2.8		32	V
I_{IN}	Input current	V_{IN} = 0 ... 32V	-15		25	µA
Enable EN:						
V_{ENlow}	Input voltage LOW		-24		1	V
V_{ENhigh}	Input voltage HIGH		3.2		V_S	V
R_{EN}	Input impedance	-24 V < V_{IN} < 2.5 V	10			kΩ
I_{EN}	Input current	2.5 V ≤ V_{IN} ≤ 32V		20	80	µA
Outputs OUT1- OUT4						
R_{DSon}	Output ON-resistor	V_S ≥ 6V, I_O = 0.3A		1.7	3.8	Ω
I_{OLeak}	Leakage current	V_O=V_S = 14 V; T_a ≤ 125 °C		≤1	5	µA
		V_O=V_S = 14 V; T_a ≤ 150 °C			25	µA
V_{OClamp}	Output voltage during clamping	time < 200µs 10 mA ≤ I_O ≤ 0.3 A	45	52	60	V
I_{OSC}	Short-circuit current	4.5V ≤ V_S ≤ 6V	0.3		1	A
		V_S > 6V	0.4	0.7	1	A
C_O	internal output capacities	V_O ≥ 4.5V			100	pF
Diagnostic Output DIAG						
V_{Dlow}	Output voltage LOW	I_{DL} ≤ 0.6mA			1.3	V
I_{Dmax}	Max. output current	internal current limitation V_D = 14V	1	5	15	mA

ELECTRICAL CHARACTERISTICS (Continued)

Symbol	Parameter	Test Condition	Min.	Typ.	Max.	Unit
I_{DLeak}	Leakage current	$V_D = V_S = 14$ V; $T_a \leq 125$ °C		≤0.1	1	µA
		$V_D = V_S = 14$ V; $T_a \leq 150$ °C			5	µA

TIMING CHARCTERISTICS 4)

$t_{d,on}$	On delay time	$V_S = 14$ V, $C_{ext} = 0$pF 10mA ≤ I_O ≤ 200mA		2	3.5	µs
$t_{d,off}$	Off delay time			3	4.5	µs
t_{set}	Enable settling time				10	µs
$t_{d,DIAG}$	ON or OFF Diagnostic delay time				10	µs
S_{out}	Output voltage slopes		2.5	9	16	V/µs

Note : All parameters are measured at $T_{amb} = 125$°C.
4. See also Fig.3 Timing Characteristics

Figure 1.

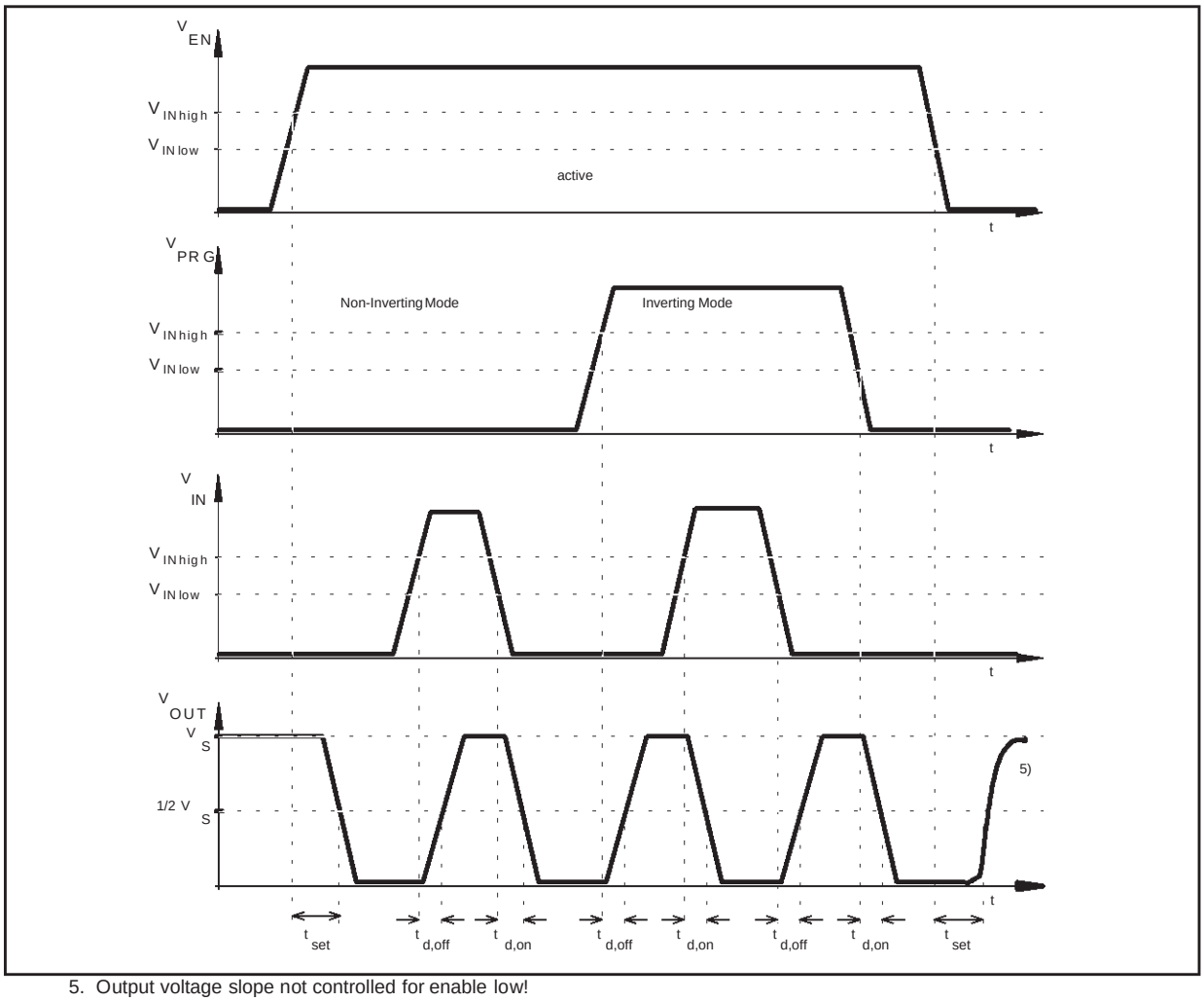

5. Output voltage slope not controlled for enable low!

FUNCTIONAL DESCRIPTION

The L9339 is a quad low side driver for lines, lamps or inductive loads in automotive and industrial applications.

The logic input levels are TTL and CMOS compatible. This allows the device to be driven directly by a micro-controller. For the noise immunity, all input thresholds has a hysteresis of typ. 100mV. At each input (IN and PRG) voltages from -0.3V to 32V can be applied, EN can withstand voltages from -25V to 32V. The device is activated with a 'high' signal on ENable. ENable 'low' switches the device into the sleep mode. In this mode the quiescent current is less than 10µA. A high signal on PRoGramming input changes the signal transfer polarity from noninverting into the inverting mode. This pin can be connected to V_S or GND. The forced status of the PRG and EN pin is low, if these pins are not connected. This forced condition leads to a mode change if the PRG pin was high before the interruption. Independent of the PRoGramming input, the OUTput switches off, if the signal INput pin is not connected.

Each output driver has a current limitation of min 0.4A and a independent thermal shut-down. The thermal shut-down deactivates that output, which exceeds temperature switch off level. When the junction temperature decreases 20K below this temperature threshold the output will be activated again (hysteresis of the thermal shut-down function). The slew rate of the output voltage is limited to max. 14V/µs, to reduce the electromagnetic radiation of the loads and its wiring. For inductive loads a output voltage clamp of typicaly 52V is implemented.

The DIAGnostic is an open drain output with an additional series diode. The logic status depends on the PRoGramming pin. If the PRG pin is 'low' the DIAG output becomes low, if the device works correctly. At thermal shut-down of one channel the DIAGnostic output becomes high. If the PRG pin is 'high' this output is switched off at normal function and switched on at overtemperature.

Diagnostic Table

Pins	EN	PRG	IN	OUT	DIAG
Correct function	H	L	L	L (on)	L (on)
	H	L	H	H (off)	L (on)
	H	H	L	H (off)	H (off)
	H	H	H	L (on)	H (off)
	L	X	X	H (off)	H (off)
Overtemperature or supply voltage	H	L	X	H (off) *	H (off)
Overtemperature	H	H	X	H(off) *	L(on)

X = not relevant * selective for each channel at overtemperature

Figure 2. Application for Inverting Transfer Polarity

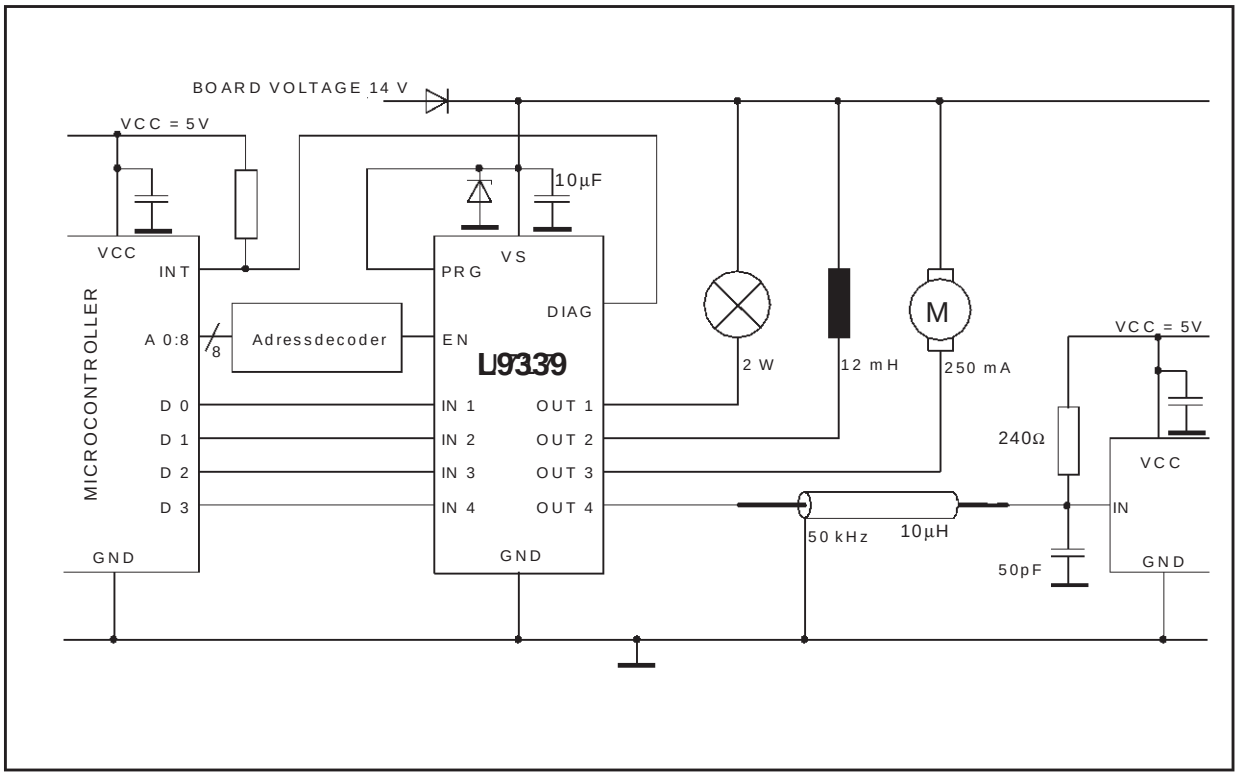

Figure 3. Application for Non Inverting Transfer Polarity

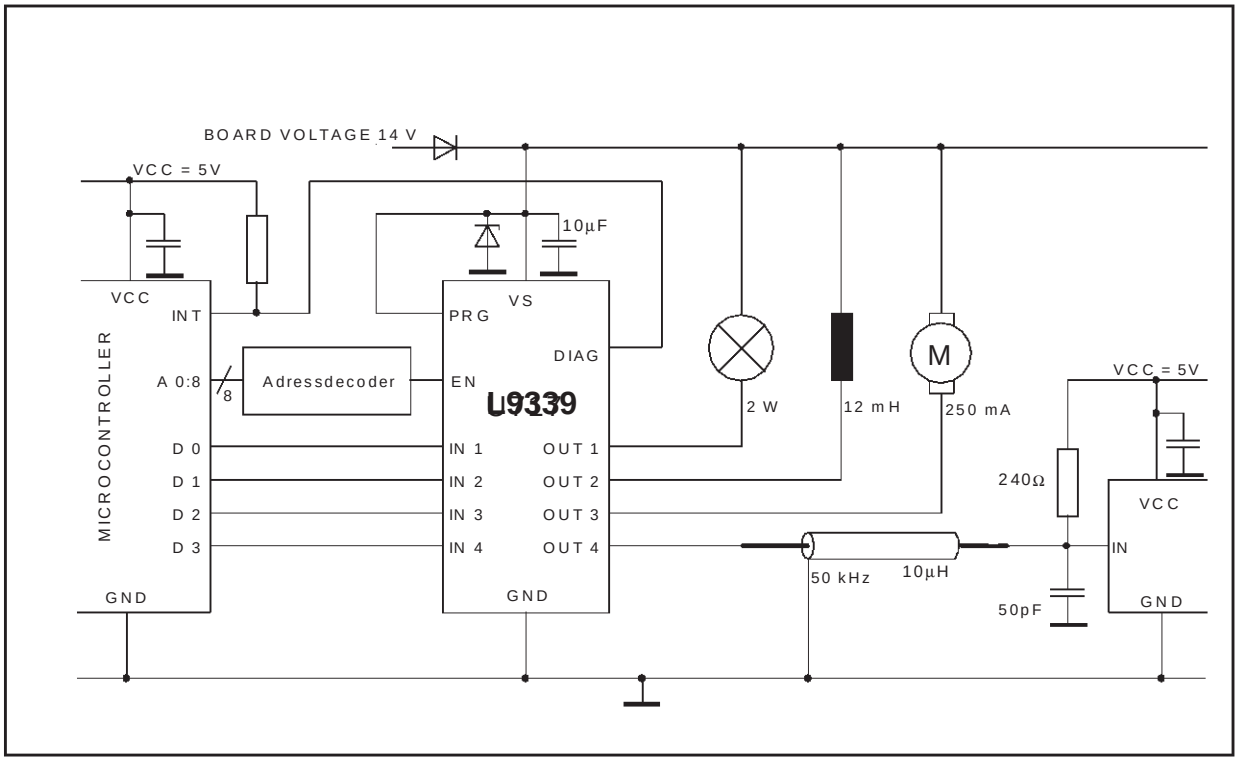

Note: We recommend to use the device for driving inductive loads with flyback energy $E_{FB} \leq 2mJ$.

DIM.	mm			inch		
	MIN.	TYP.	MAX.	MIN.	TYP.	MAX.
A	2.35		2.65	0.093		0.104
A1	0.1		0.3	0.004		0.012
B	0.33		0.51	0.013		0.020
C	0.23		0.32	0.009		0.013
D	12.6		13	0.496		0.512
E	7.4		7.6	0.291		0.299
e		1.27			0.050	
H	10		10.65	0.394		0.419
h	0.25		0.75	0.010		0.030
L	0.4		1.27	0.016		0.050
K	0° (min.)8° (max.)					

OUTLINE AND MECHANICAL DATA

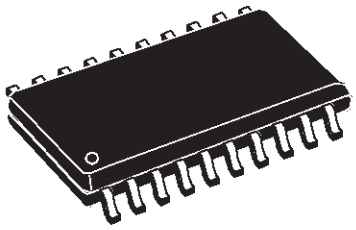

SO20 & SO20(12+4+4)