查询ISL9V5045S3供应商 捷多邦，专业PCB打样工厂，24小时加急出货

FAIRCHILD SEMICONDUCTOR®

August 2005

ISL9V5045S3S / ISL9V5045S3
EcoSPARK™ N-Channel Ignition IGBT
500mJ, 450V

Features

- SCIS Energy = 500mJ at T_J = 25°C
- Logic Level Gate Drive

Applications

- Automotive Ignition Coil Driver Circuits
- Coil - On Plug Applications

General Description

The ISL9V5045S3S and ISL9V5045S3 are next generation ignition IGBTs that offer outstanding SCIS capability in the industry standard D²-Pak (TO-263) plastic package. This device is intended for use in automotive ignition circuits, specifically as a coil drivers. Internal diodes provide voltage clamping without the need for external components.

EcoSPARK™ devices can be custom made to specific clamp voltages. Contact your nearest Fairchild sales office for more information.

Package

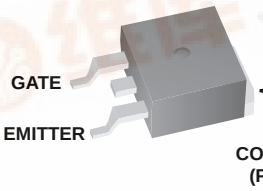

JEDEC TO-263AB
D²-Pak

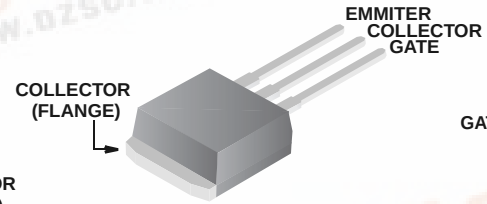

JEDEC TO-262AA

Symbol

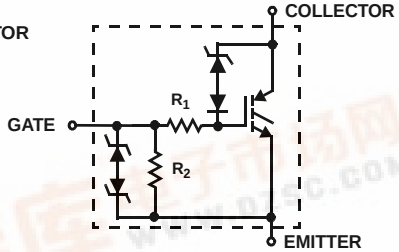

ISL9V5045S3S / ISL9V5045S3 N-Channel Ignition IGBT

找PDF 维库一下 pdf.dzsc.com

Device Maximum Ratings T_A = 25°C unless otherwise noted

Symbol	Parameter	Ratings	Units
BV_{CER}	Collector to Emitter Breakdown Voltage (I_C = 1 mA)	480	V
BV_{ECS}	Emitter to Collector Voltage - Reverse Battery Condition (I_C = 10 mA)	24	V
E_{SCIS25}	At Starting T_J = 25°C, I_{SCIS} = 39.2A, L = 650 μHy	500	mJ
$E_{SCIS150}$	At Starting T_J = 150°C, I_{SCIS} = 31.1A, L = 650 μHy	315	mJ
I_{C25}	Collector Current Continuous, At T_C = 25°C, See Fig 9	51	A
I_{C110}	Collector Current Continuous, At T_C = 110°C, See Fig 9	43	A
V_{GEM}	Gate to Emitter Voltage Continuous	±10	V
P_D	Power Dissipation Total T_C = 25°C	300	W
	Power Dissipation Derating T_C > 25°C	2	W/°C
T_J	Operating Junction Temperature Range	-40 to 175	°C
T_{STG}	Storage Junction Temperature Range	-40 to 175	°C
T_L	Max Lead Temp for Soldering (Leads at 1.6mm from Case for 10s)	300	°C
T_{pkg}	Max Lead Temp for Soldering (Package Body for 10s)	260	°C
ESD	Electrostatic Discharge Voltage at 100pF, 1500Ω	4	kV

Package Marking and Ordering Information

Device Marking	Device	Package	Reel Size	Tape Width	Quantity
V5045S	ISL9V5045S3ST	TO-263AB	330mm	24mm	800
V5045S	ISL9V5045S3	TO-262AA	Tube	N/A	50
V5045S	ISL9V5045S3S	TO-263AB	Tube	N/A	50

Electrical Characteristics T_A = 25°C unless otherwise noted

Symbol	Parameter	Test Conditions		Min	Typ	Max	Units
Off State Characteristics							
BV_{CER}	Collector to Emitter Breakdown Voltage	I_C = 2mA, V_{GE} = 0, R_G = 1KΩ, See Fig. 15 T_J = -40 to 150°C		420	450	480	V
BV_{CES}	Collector to Emitter Breakdown Voltage	I_C = 10mA, V_{GE} = 0, R_G = 0, See Fig. 15 T_J = -40 to 150°C		445	475	505	V
BV_{ECS}	Emitter to Collector Breakdown Voltage	I_C = -75mA, V_{GE} = 0V, T_C = 25°C		30	-	-	V
BV_{GES}	Gate to Emitter Breakdown Voltage	I_{GES} = ± 2mA		±12	±14	-	V
I_{CER}	Collector to Emitter Leakage Current	V_{CER} = 320V, R_G = 1KΩ, See Fig. 11	T_C = 25°C	-	-	25	μA
			T_C = 150°C	-	-	1	mA
I_{ECS}	Emitter to Collector Leakage Current	V_{EC} = 24V, See Fig. 11	T_C = 25°C	-	-	1	mA
			T_C = 150°C	-	-	40	mA
R_1	Series Gate Resistance			-	100	-	Ω
R_2	Gate to Emitter Resistance			10K	-	30K	Ω
On State Characteristics							
$V_{CE(SAT)}$	Collector to Emitter Saturation Voltage	I_C = 10A, V_{GE} = 4.0V	T_C = 25°C, See Fig. 4	-	1.25	1.60	V
$V_{CE(SAT)}$	Collector to Emitter Saturation Voltage	I_C = 15A, V_{GE} = 4.5V	T_C = 150°C	-	1.47	1.80	V

Dynamic Characteristics

$Q_{G(ON)}$	Gate Charge	I_C = 10A, V_{CE} = 12V, V_{GE} = 5V, See Fig. 14		-	32	-	nC
$V_{GE(TH)}$	Gate to Emitter Threshold Voltage	I_C = 1.0mA, V_{CE} = V_{GE}, See Fig. 10	T_C = 25°C	1.3	-	2.2	V
			T_C = 150°C	0.75	-	1.8	V
V_{GEP}	Gate to Emitter Plateau Voltage	I_C = 10A,	V_{CE} = 12V	-	3.0	-	V

Switching Characteristics

$t_{d(ON)R}$	Current Turn-On Delay Time-Resistive	V_{CE} = 14V, R_L = 1Ω, V_{GE} = 5V, R_G = 1KΩ T_J = 25°C, See Fig. 12	-	0.7	4	µs
t_{rR}	Current Rise Time-Resistive		-	2.1	7	µs
$t_{d(OFF)L}$	Current Turn-Off Delay Time-Inductive	V_{CE} = 300V, L = 2mH, V_{GE} = 5V, R_G = 1KΩ T_J = 25°C, See Fig. 12	-	10.8	15	µs
t_{fL}	Current Fall Time-Inductive		-	2.8	15	µs
SCIS	Self Clamped Inductive Switching	T_J = 25°C, L = 650 µH, R_G = 1KΩ, V_{GE} = 5V, See Fig. 1 & 2	-	-	500	mJ

Thermal Characteristics

$R_{\theta JC}$	Thermal Resistance Junction-Case	TO-263, TO-262	-	-	0.5	°C/W

Typical Characteristics

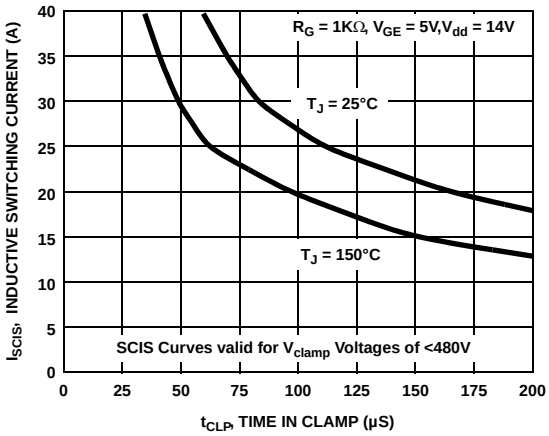

Figure 1. Self Clamped Inductive Switching Current vs Time in Clamp

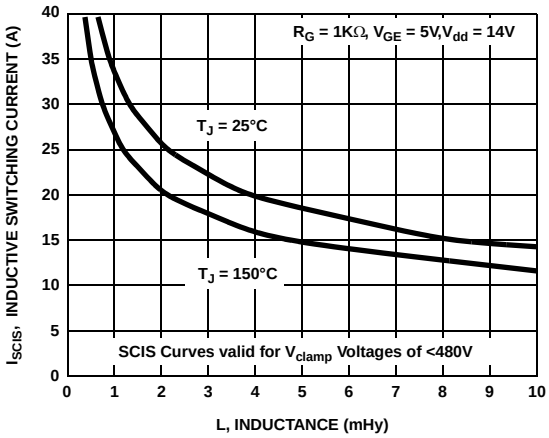

Figure 2. Self Clamped Inductive Switching Current vs Inductance

Typical Characteristics (Continued)

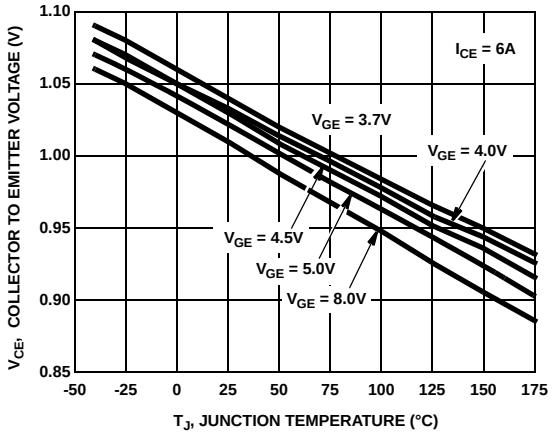

Figure 3. Collector to Emitter On-State Voltage vs Junction Temperature

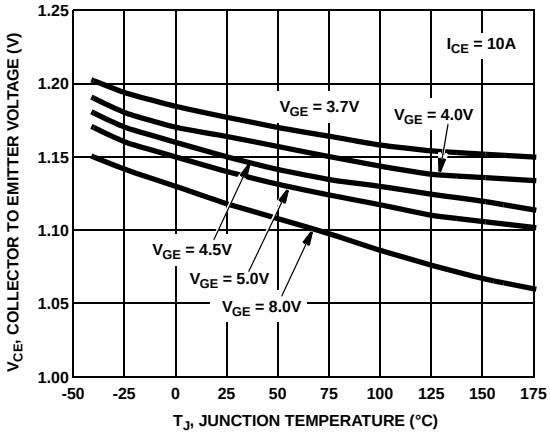

Figure 4.Collector to Emitter On-State Voltage vs Junction Temperature

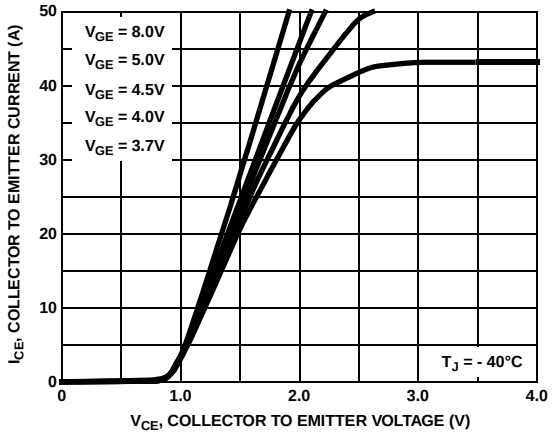

Figure 5. Collector Current vs Collector to Emitter On-State Voltage

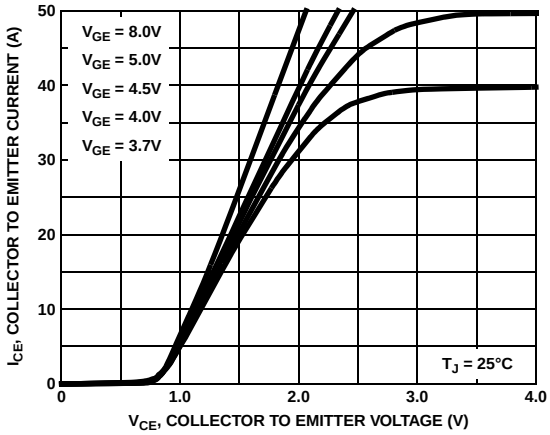

Figure 6. Collector Current vs Collector to Emitter On-State Voltage

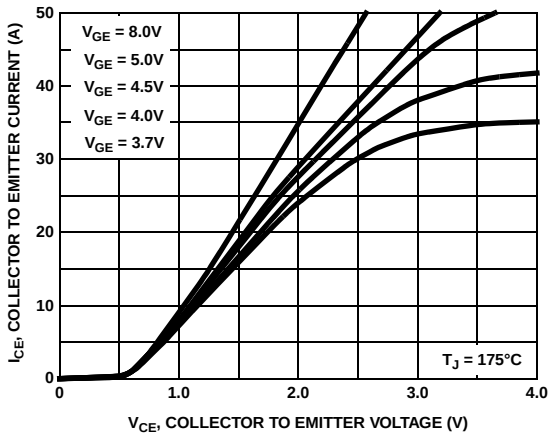

Figure 7. Collector to Emitter On-State Voltage vs Collector Current

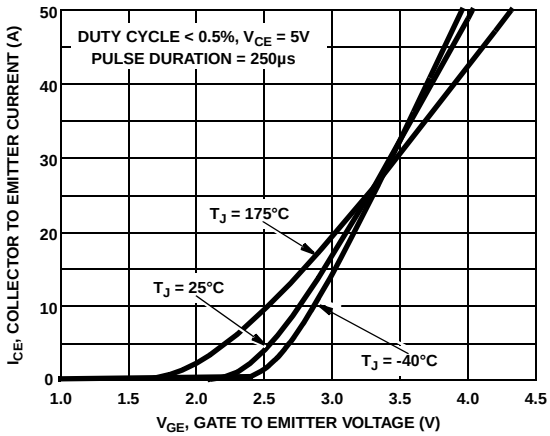

Figure 8. Transfer Characteristics

Typical Characteristics (Continued)

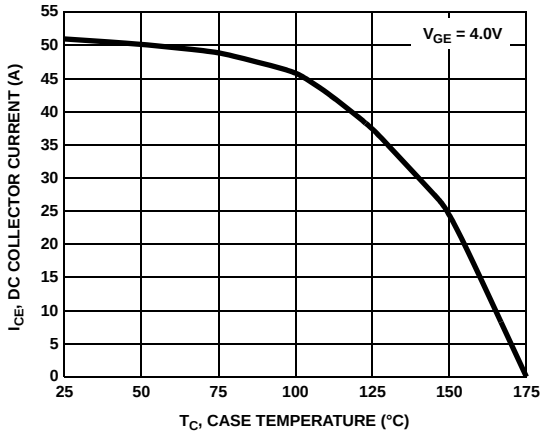

Figure 9. DC Collector Current vs Case Temperature

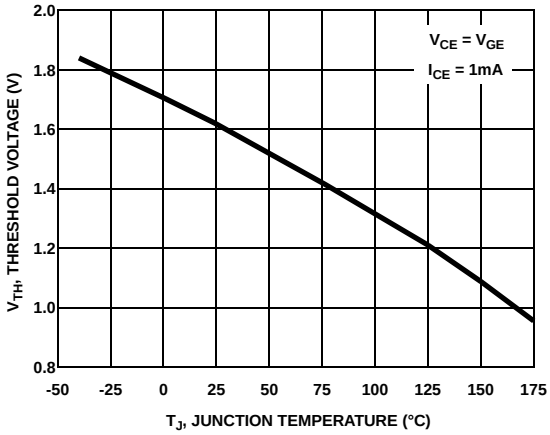

Figure 10. Threshold Voltage vs Junction Temperature

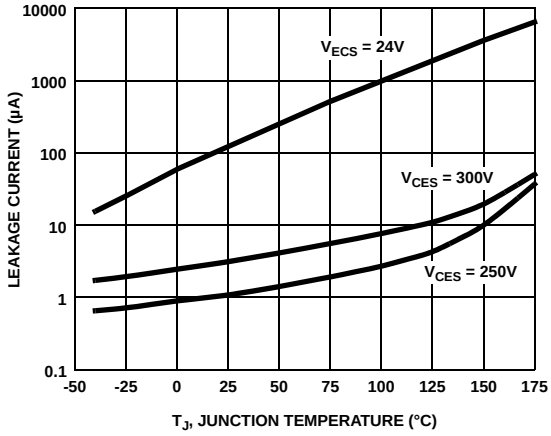

Figure 11. Leakage Current vs Junction Temperature

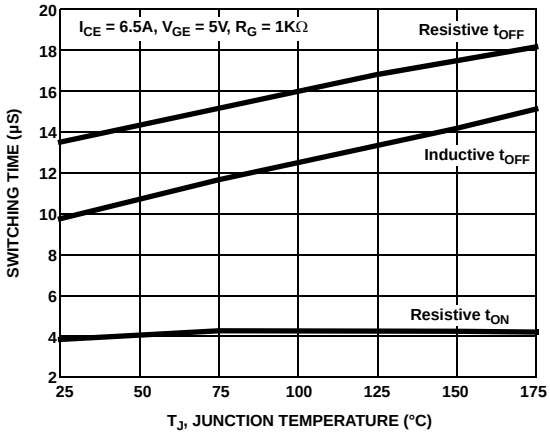

Figure 12. Switching Time vs Junction Temperature

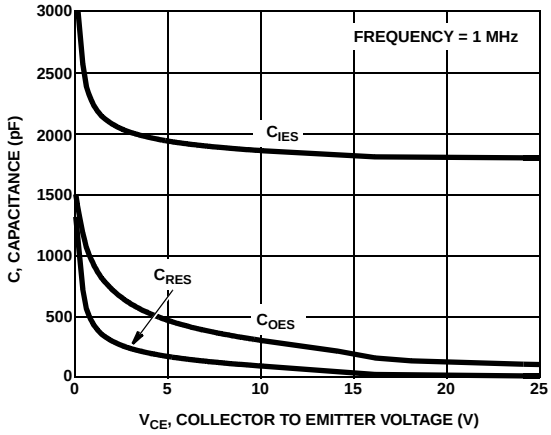

Figure 13. Capacitance vs Collector to Emitter Voltage

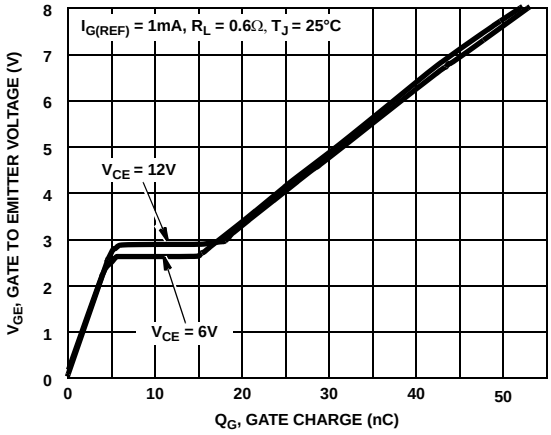

Figure 14. Gate Charge

Typical Characteristics (Continued)

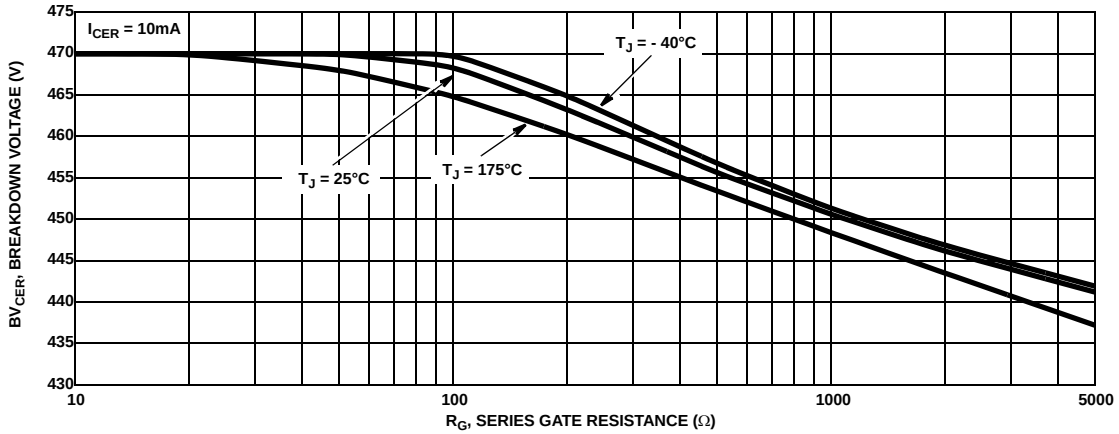

Figure 15. Breakdown Voltage vs Series Gate Resistance

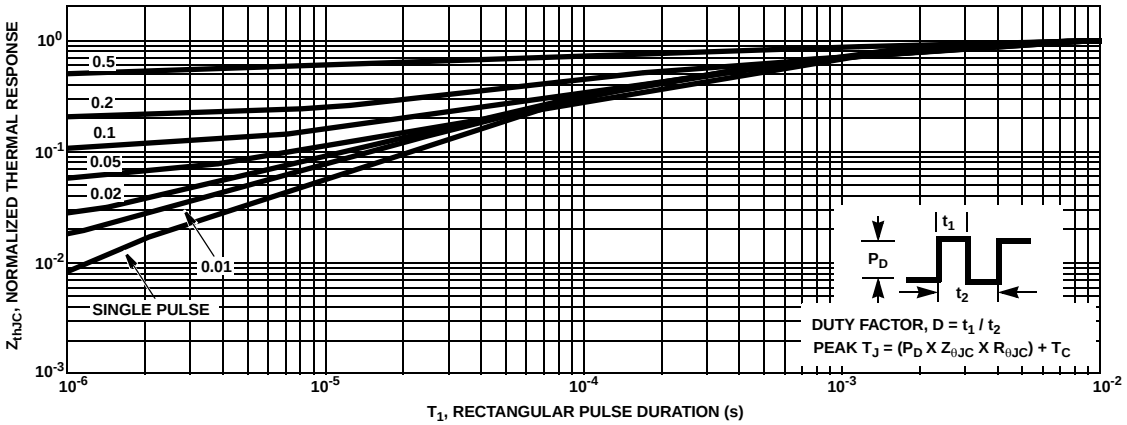

Figure 16. IGBT Normalized Transient Thermal Impedance, Junction to Case

Test Circuits and Waveforms

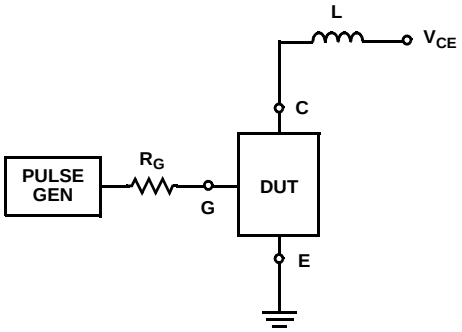

Figure 17. Inductive Switching Test Circuit

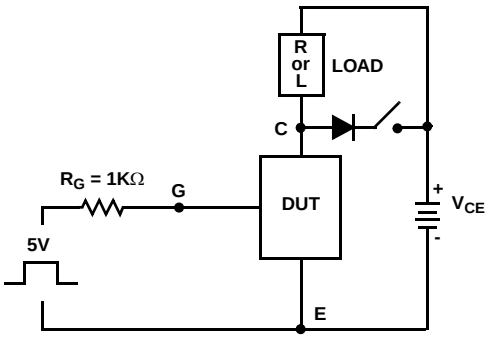

Figure 18. t_{ON} and t_{OFF} Switching Test Circuit

Test Circuits and Waveforms (Continued)

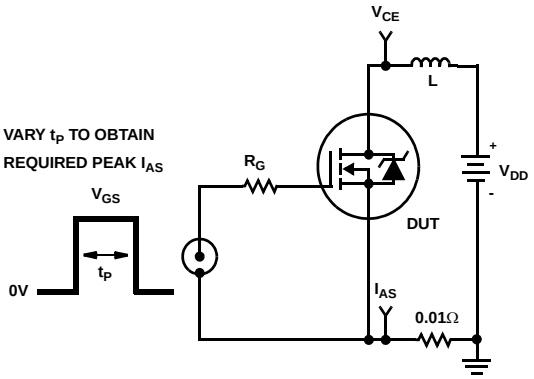

Figure 19. Energy Test Circuit

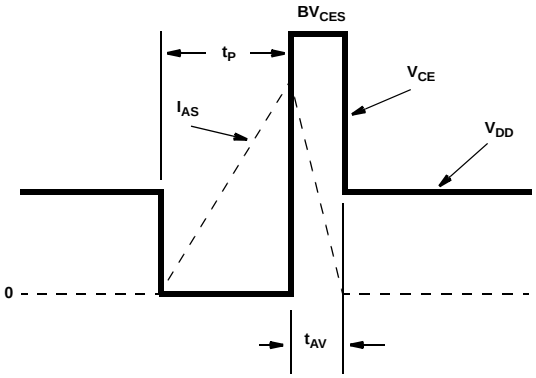

Figure 20. Energy Waveforms

SPICE Thermal Model

REV 27 May 2005

ISL9V5045S3S / ISL9V5045S3

CTHERM1 th 6 82e-4
CTHERM2 6 5 105e-4
CTHERM3 5 4 12e-3
CTHERM4 4 3 33e-3
CTHERM5 3 2 55e-3
CTHERM6 2 tl 170e-3

RTHERM1 th 6 3e-3
RTHERM2 6 5 20e-3
RTHERM3 5 4 50e-3
RTHERM4 4 3 60e-3
RTHERM5 3 2 100e-3
RTHERM6 2 tl 127e-3

SABER Thermal Model

```
SABER thermal model
ISL9V5045S3S / ISL9V5045S3
template thermal_model th tl
thermal_c th, tl
{
ctherm.ctherm1 th 6 = 82e-4
ctherm.ctherm2 6 5 = 105e-4
ctherm.ctherm3 5 4 = 12e-3
ctherm.ctherm4 4 3 = 33e-3
ctherm.ctherm5 3 2 = 55e-3
ctherm.ctherm6 2 tl = 170e-3

rtherm.rtherm1 th 6 = 3e-3
rtherm.rtherm2 6 5 = 20e-3
rtherm.rtherm3 5 4 = 50e-3
rtherm.rtherm4 4 3 = 60e-3
rtherm.rtherm5 3 2 = 100e-3
rtherm.rtherm6 2 tl = 127e-3
}
```

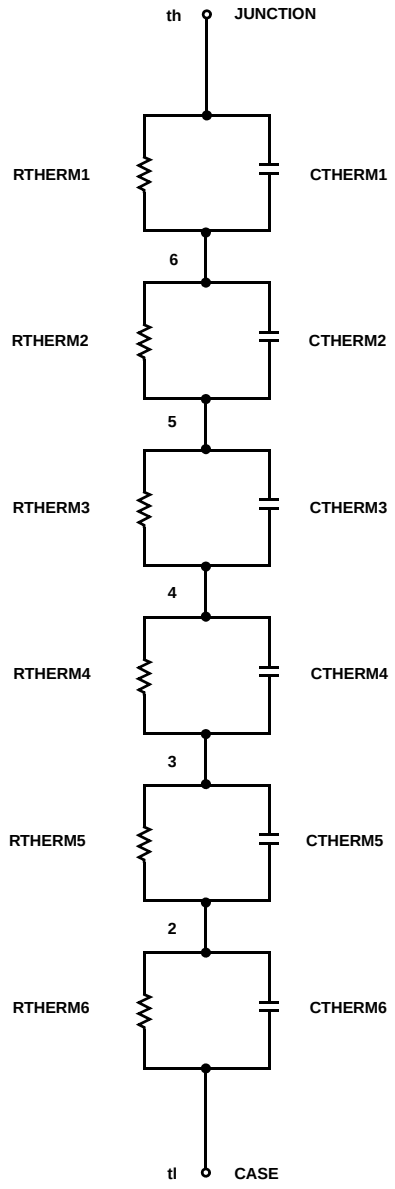

TRADEMARKS

The following are registered and unregistered trademarks Fairchild Semiconductor owns or is authorized to use and is not intended to be an exhaustive list of all such trademarks.

ACEx™	FACT™	*i-Lo*™	PACMAN™	SPM™
ActiveArray™	FACT Quiet Series™	ImpliedDisconnect™	POP™	Stealth™
Bottomless™	FAST®	IntelliMAX™	Power247™	SuperFET™
Build it Now™	FASTr™	ISOPLANAR™	PowerEdge™	SuperSOT™-3
CoolFET™	FPS™	LittleFET™	PowerSaver™	SuperSOT™-6
CROSSVOLT™	FRFET™	MICROCOUPLER™	PowerTrench®	SuperSOT™-8
DOME™	GlobalOptoisolator™	MicroFET™	QFET®	SyncFET™
EcoSPARK™	GTO™	MicroPak™	QS™	TinyLogic®
E^2CMOS™	HiSeC™	MICROWIRE™	QT Optoelectronics™	TINYOPTO™
EnSigna™	I^2C™	MSX™	Quiet Series™	TruTranslation™
		MSXPro™	RapidConfigure™	UHC™
Across the board. Around the world.™		OCX™	RapidConnect™	UltraFET®
The Power Franchise®		OCXPro™	µSerDes™	UniFET™
Programmable Active Droop™		OPTOLOGIC®	SILENT SWITCHER®	VCX™
		OPTOPLANAR™	SMART START™	Wire™

DISCLAIMER

FAIRCHILD SEMICONDUCTOR RESERVES THE RIGHT TO MAKE CHANGES WITHOUT FURTHER NOTICE TO ANY PRODUCTS HEREIN TO IMPROVE RELIABILITY, FUNCTION OR DESIGN. FAIRCHILD DOES NOT ASSUME ANY LIABILITY ARISING OUT OF THE APPLICATION OR USE OF ANY PRODUCT OR CIRCUIT DESCRIBED HEREIN; NEITHER DOES IT CONVEY ANY LICENSE UNDER ITS PATENT RIGHTS, NOR THE RIGHTS OF OTHERS.

LIFE SUPPORT POLICY

FAIRCHILD'S PRODUCTS ARE NOT AUTHORIZED FOR USE AS CRITICAL COMPONENTS IN LIFE SUPPORT DEVICES OR SYSTEMS WITHOUT THE EXPRESS WRITTEN APPROVAL OF FAIRCHILD SEMICONDUCTOR CORPORATION.

As used herein:

1. Life support devices or systems are devices or systems which, (a) are intended for surgical implant into the body, or (b) support or sustain life, or (c) whose failure to perform when properly used in accordance with instructions for use provided in the labeling, can be reasonably expected to result in significant injury to the user.

2. A critical component is any component of a life support device or system whose failure to perform can be reasonably expected to cause the failure of the life support device or system, or to affect its safety or effectiveness.

PRODUCT STATUS DEFINITIONS

Definition of Terms

Datasheet Identification	Product Status	Definition
Advance Information	Formative or In Design	This datasheet contains the design specifications for product development. Specifications may change in any manner without notice.
Preliminary	First Production	This datasheet contains preliminary data, and supplementary data will be published at a later date. Fairchild Semiconductor reserves the right to make changes at any time without notice in order to improve design.
No Identification Needed	Full Production	This datasheet contains final specifications. Fairchild Semiconductor reserves the right to make changes at any time without notice in order to improve design.
Obsolete	Not In Production	This datasheet contains specifications on a product that has been discontinued by Fairchild semiconductor. The datasheet is printed for reference information only.

Rev. I16